# PRISMA

## STEPPER MOTOR DOSING PUMP

The PRISMA diaphragm and stepper motor metering pump is designed for applications requiring high precision dosing volumes and reliable repeatability. Thanks to the microprocessor controlled stepper motor and excellent pitch resolution of 1: 4800, the entire stroke and suction cycle is controlled with maximum precision. Maximum steps frequency: 180 st/m.

The PRISMA dosing pumps ensure precise control of the stroke frequency and therefore a precise and low pulsation of the liquid additives even when dosing viscous substances. (max 10000 cP @ 10% slow mode).

R301225

### SLOW MODE

With the exclusive SLOW MODE functionality of the PRISMA metering pumps, the stroke speed during the suction cycle can be reduced from 100% to 1%. This feature facilitates the adaptation of the pump to the metering medium and increases the reliability and venting of high viscosity dosing media.

### COLOR DISPLAY AND ENCODER CONTROL

The PRISMA dosing pump is equipped with an encoder for quick and easy menu navigation, as well as a large display for a convenient setting of the operating parameters and monitoring of the pump functions.

The intelligent multi-function software allows the operator to precisely set the dosage required by the application. This allows you to enter the desired value and read it directly in ml/h or l/h via the graphic display. All operating modes are displayed clearly and easily through self-explaining symbols.

### OPERATING MODE

- Constant
- Proportional control by external input, mg/l (ppm) mode
- Proportional control by external input, percentage (%) mode
- Start-Pause
- Weekly timer
- External input (start and/or pause)

Operating messages are easily recognizable
by different background colors of the display:

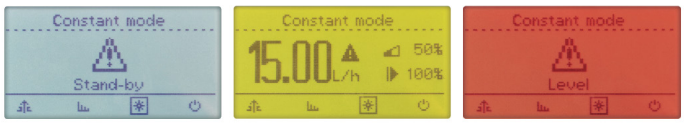


**White**: Pump in StandBy **Green**: Pump running Red: Alarm
**Yellow**: Warning (product in tank at minimum)

### TURNDOWN FUNCTION

Prisma stepper motor-driven pumps give you the most accurate control over the stroke speed, providing an outstanding turndown ratio of up to 4800:1. it means prisma can split up the dosing process into a maximum of 4800 steps in order to offer the most homogeneous and precise distribution of the product to dose according to the required application. Furthermore CC per pulse function add an extra dosing precision.

### INPUTS

Multi-function input for
- Level (with pre-alarm)
- Pulse sender water meter (PPM mode,%, mlq, mA, V, pulse)
- Standby
- External contact (free of voltage)

### OUTPUT

- alarm (common to all alarms)

### INTERFACE

- RS485
- Modbus RTU
- Bluetooth for remote controlling / APP MY EMEC
- WIFI

### HYDRAULIC PARTS

- PVDF
- PP
- stainless steel (AISI 316)
- acrylic glass (PMMA)
- double ball check valves
- FKM B, EPDM, nitrile, PTFE O-rings

### MEMBRANE

- PTFE membrane

### ACCESSORIES

- 1/2„ injector (made of PVDF or PP)
- Axial bottom valve (made of PVDF or PP)
- Empty signal level switch
- 2m suction, suction and ventilation pipe (PVDF or PE and PVC)
- INPUT multifunction cable
- ALARM cable

### APP CONTROLLED (iOS & Android)

- bluetooth connectivity to in-app control and program the pump

Via Donatori di Sangue, 1 - 02100 Rieti (Italy)
+39 074622841 | emecpumps.com

Specifications subject to change without notice | R11-19

emec
SIMPLE AS WATER

qualityaustria SYSTEM CERTIFIED
ISO 9001:2015
ISO 14001:2015
BS OHSAS 18001:2007

# PRISMA

## STEPPER MOTOR DOSING PUMP

| MODEL | 2001 | 2502 | 2005 | 1013 | 0720 | 0528 | 0450 | 0280 | 0370 | 167,5 |
|---|---|---|---|---|---|---|---|---|---|---|
| Flow l/h (GPH) | 1 (0.2) | 2 (0.5) | 5 (1.3) | 13 (3.4) | 20 (5.2) | 28 (7.3) | 50 (13.2) | 80 (21.1) | 70 (18.4) | 7,5 (1.8) |
| Pressure max bar (PSI) | 20 (290) | 25 (362) | 20 (290) | 10 (145) | 7 (101) | 5 (72) | 4 (58) | 2 (29) | 3 (43) | 16 (232) |
| Pump Head (Model) | I | L | L | M | N | N | N | N | N | L |
| Pump Head (Material) | PVDF, PP, SS (AISI 316), Acrylic Glass (PMMA) | | | | | | | | | |
| Membrane | PTFE | | | | | | | | | |
| O-Ring | FKM B, EPDM, Nitril, PTFE | | | | | | | | | |
| Liquid-ends (S/D) mm | 4x6 / 4x6 | | | 6x8 | 8x12 PE / 8x10 PVDF (D) | | | | | 4x6 / 4x6 |
| Pump Head | 3/8” | | | | 1/2” | | | | | 3/8” |
| Injection | 1/2” | | | | | | 3/4” | | 1/2” | |
| Turn Down Ratio | 1:4800 (minimum steps) | | | | | | | | | |
| Slow Mode | From 100% to 1% | | | | | | | | | |
| Input Pulses | max. 24VDC, max. 50mA | | | | | | | | | |
| Input Pulses (Hall) | max. 12VDC, max. 50mA, with extra output +12V | | | | | | | | | |
| Input Analog | 0/4 - 20mA<br>0 - 10V<br>(max load 500 Ω) | | | | | | | | | |
| Outputs Alarm | Free contact relais N.O./C/N.C.<br>max load 250 VAC, 2A | | | | | | | | | |
| Level connection | 12VDC, max. 50mA | | | | | | | | | |
| Protection | IP65 Humidity 85% und T ≤ 40 °C; 70% und T = 50 °C (no condensation) | | | | | | | | | |
| Pump housing | PP plastic reinforced with glass fiber | | | | | | | | | |
| Installation class | II | | | | | | | | | |
| Pollution level | 2 | | | | | | | | | |
| Environment Temperature °C | 10 - 45 | | | | | | | | | |
| Operating Temperature °C | 1 - 45 | | | | | | | | | |
| Transport & Storage Temperature °C | -10 - 50 | | | | | | | | | |
| Power Supply | 100 - 240 VAC, 50/60 Hz \| 9 - 36 VDC (±10%) | | | | | | | | | |
| Energy consumption | 30W (AC / DC) | | | | | | | | | |
| Communication | RS485 / Modbus RTU (Optional) | | | | | | | | | |
| Audible Noise | 25dB (average) | | | | | | | | | |
| Repeatability | ± 2% | | | | | | | | | |
| Net Weight | 2,7 Kg (with “N” pump head) | | | | | | | | | |

Via Donatori di Sangue, 1 - 02100 Rieti (Italy)
+39 074622841 | emecpumps.com

Specifications subject to change without notice | R11-19

emec
SIMPLE AS WATER

qualityaustria
SYSTEM CERTIFIED
ISO 9001:2015
ISO 14001:2015
BS OHSAS 18001:2007

# PRISMA
STEPPER MOTOR DOSING PUMP

## DIMENSIONS (mm)

**PRISMA 2001, 2005, 1013 and 2502**

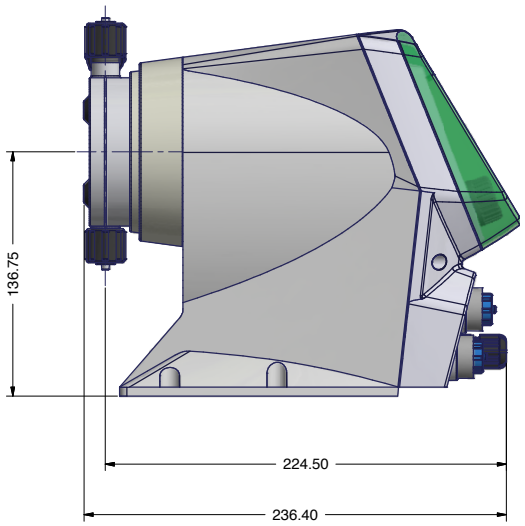


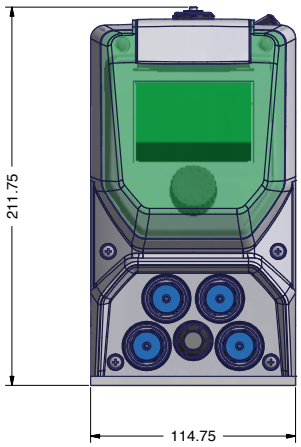


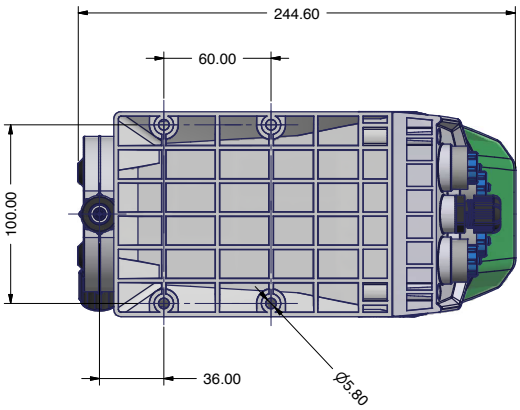


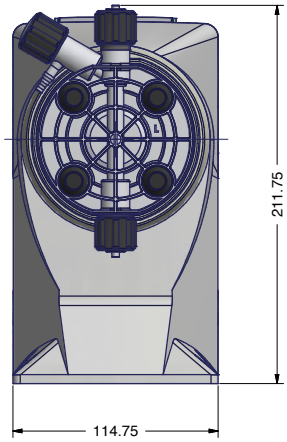


Via Donatori di Sangue, 1 - 02100 Rieti (Italy)
+39 074622841 | emecpumps.com

Specifications subject to change without notice | R11-19

emec
SIMPLE AS WATER

qualityaustria
SYSTEM CERTIFIED
ISO 9001:2015
ISO 14001:2015
BS OHSAS 18001:2007

# PRISMA
## STEPPER MOTOR DOSING PUMP

## DIMENSIONS (mm)

**PRISMA 0528, 0280, 0450, 167,5 and 0720**

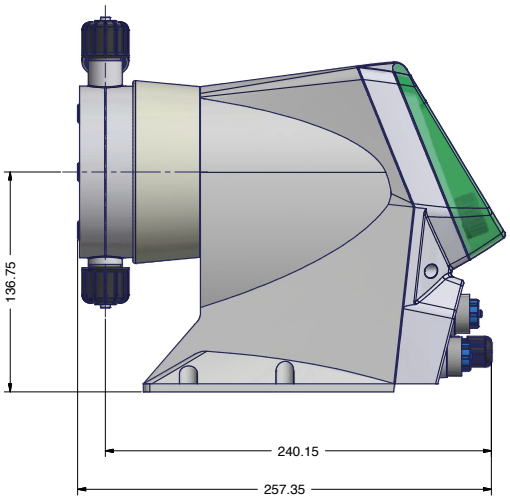


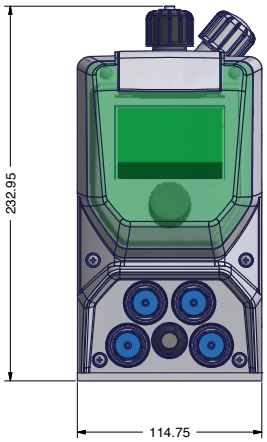


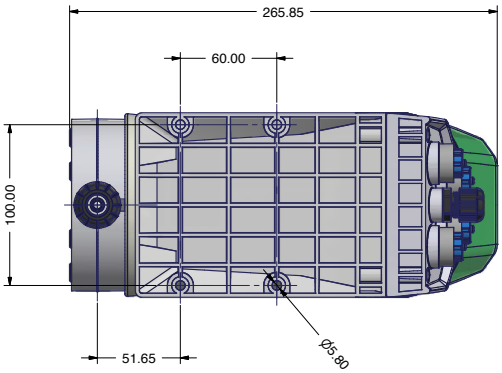


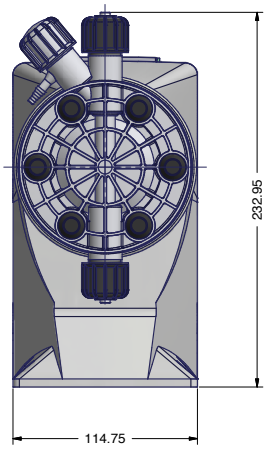


Via Donatori di Sangue, 1 - 02100 Rieti (Italy)
+39 074622841 | emecpumps.com

Specifications subject to change without notice | R11-19

emec
SIMPLE AS WATER

qualityaustria
SYSTEM CERTIFIED
ISO 9001:2015
ISO 14001:2015
BS OHSAS 18001:2007