"SOIM" - Pulsation Dampener

Data Sheet

FEATURES

- Pulsation dampener without membrane
- Available with PVC or SS or PVDF head wetted parts
- Max operating pressure 5 bar at 25°C (except SOIM1/SS)

PULSATION DAMPENER SIZING:

To determine the suitable SOIM use the following empirical formula:

$$\text{Volume (lt)} = \frac{\text{pressure (bar) x quantity to dose (lt)}}{500}$$

Volume (lt) from the formula must be < or = to SOIM Volume (lt) as in the tables below.

SPECIFICATIONS

	SOIM1/V	SOIM1/D
Connections	1/2"	1/2"
Volume (lt)	0.5 lt	0.5 lt
O-Rings	FKM B	Ethylene Propylene
Head	PVC	PVC
Pressure /temp.	5 bar/25°C (3 bar/40°C)	

	SOIM1/SS
Connections	1/2"
Volume (lt)	0.5 lt
O-Rings	FKM B
Head	SS
Pressure /temp.	10 bar/130°C

	SOIM3/V	SOIM3/D	SOIM3K/V
Connections	3/8"	3/8"	3/8"
Volume (lt)	0.09 lt	0.09 lt	0.09 lt
O-Rings	FKM B	Ethylene Propylene	FKM B
Head	PVC	PVC	PVDF
Pressure /temp.	10 bar/25°C (3 bar/40°C)		

Via Donatori di Sangue, 1 - 02100 Rieti (Italy)
+39 074622841 | emecpumps.com

Specifications subject to change without notice | R2025

emec SIMPLE AS WATER

IQNET CERTIFIED MANAGEMENT SYSTEM
qualityaustria SYSTEM CERTIFIED
ISO 9001:2015 No.07728/0
ISO 14001:2015 No.00997/0
ISO 45001:2018 No.01121/0

"SOIM" - Pulsation Dampener

Data Sheet

	SOIM2,5/V	SOIM2,5/D
Connections	3/4"x18	3/4"x18
Volume (lt)	2.5 lt	2.5 lt
O-Rings	FKM B	Ethylene Propylene
Head	PVC	PVC
Pressure / temp.	10 bar/25°C (6 bar/40°C)	

	SOIM5/V	SOIM5/D
Connections	1 1/2"x32	1 1/2"x32
Volume (lt)	5 lt	5 lt
O-Rings	FKM B	Ethylene Propylene
Head	PVC	PVC
Pressure / temp.	10 bar/25°C (6 bar/40°C)	

	SOIM1K/V
Connections	1/2"
Volume (lt)	0.5 lt
O-Rings	FKM B
Head	PVDF
Pressure /temp.	5 bar/25°C (3 bar/40°C)

Via Donatori di Sangue, 1 - 02100 Rieti (Italy)
+39 074622841 | emecpumps.com

Specifications subject to change without notice | R2025

emec SIMPLE AS WATER

IQNET CERTIFIED MANAGEMENT SYSTEM
qualityaustria SYSTEM CERTIFIED
ISO 9001:2015 No.07728/0
ISO 14001:2015 No.00997/0
ISO 45001:2018 No.01121/0

DIMENSIONS

Expressed in mm

SOIM3/V, SOIM3/D and SOIM3K/V

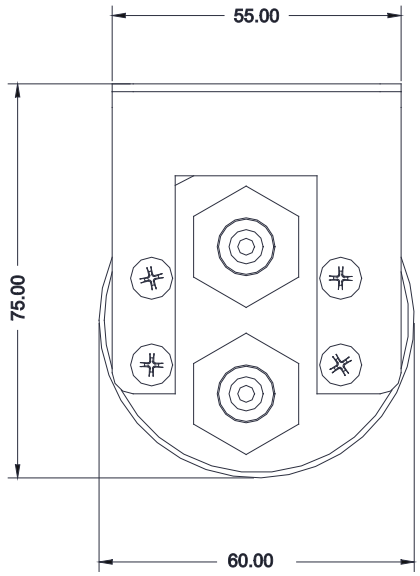

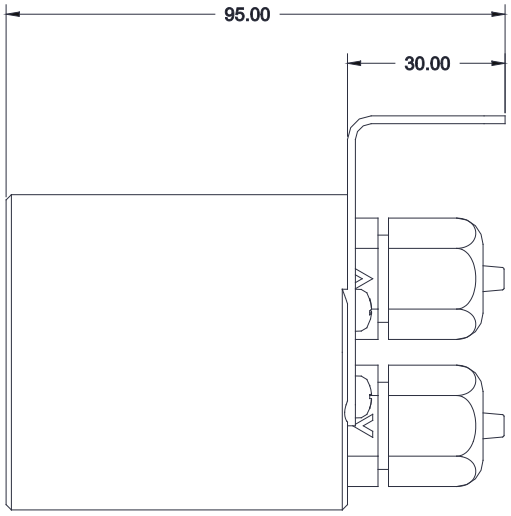

SOIM1/V and SOIM1/D

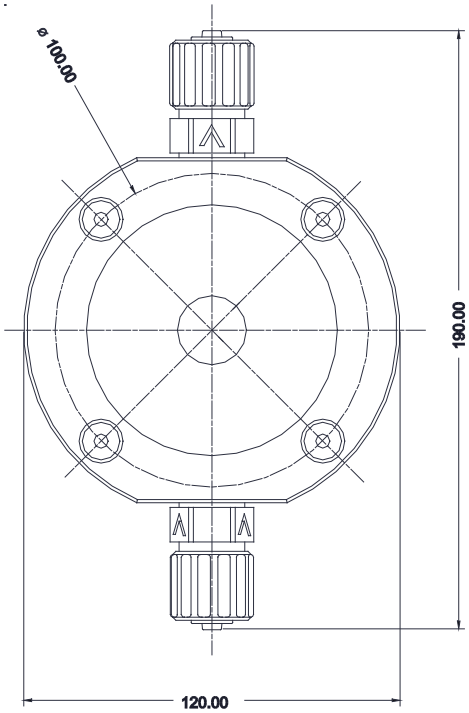

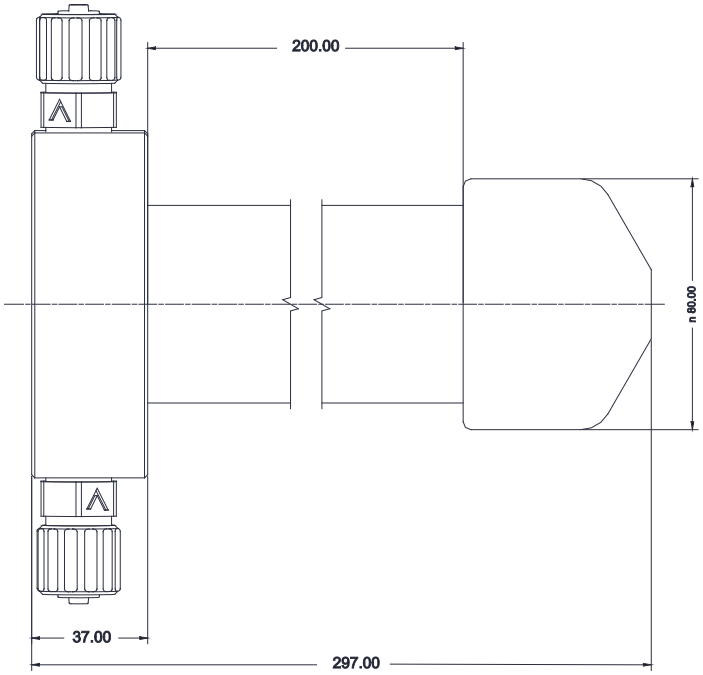

Via Donatori di Sangue, 1 - 02100 Rieti (Italy)
+39 074622841 | emecpumps.com

Specifications subject to change without notice | R2025

emec SIMPLE AS WATER

IQNET CERTIFIED MANAGEMENT SYSTEM
qualityaustria SYSTEM CERTIFIED
ISO 9001:2015 No.07728/0
ISO 14001:2015 No.00997/0
ISO 45001:2018 No.01121/0

“SOIM” - Pulsation Dampener

Data Sheet

SOIM2.5/V e SOIM2.5/D

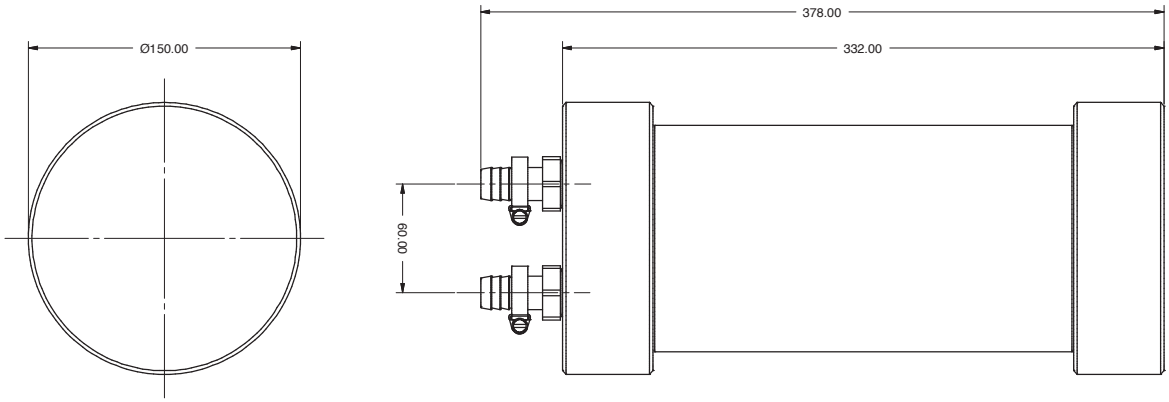

SOIM5/V e SOIM5/D

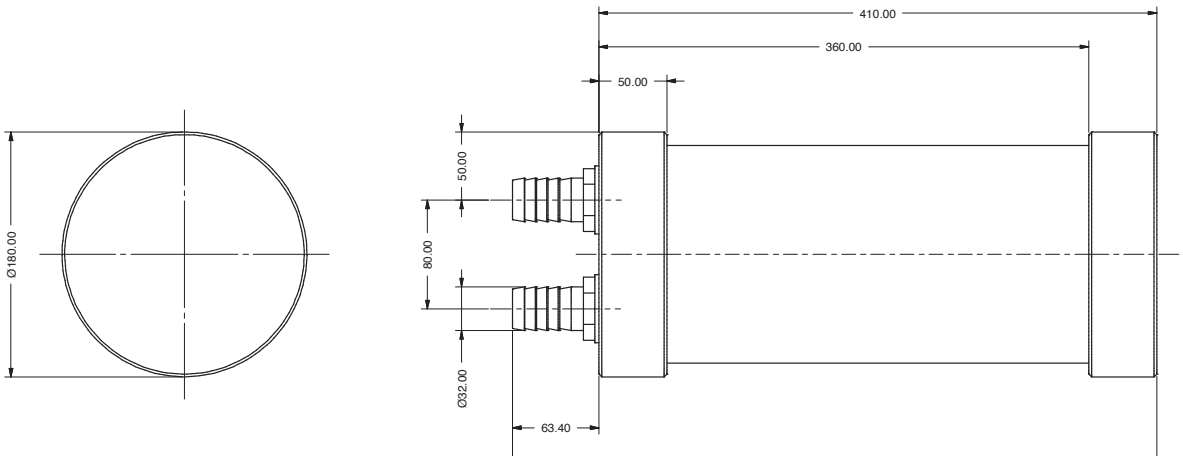

Via Donatori di Sangue, 1 - 02100 Rieti (Italy)
+39 074622841 | emecpumps.com

Specifications subject to change without notice | R2025

emec SIMPLE AS WATER

IQNET CERTIFIED MANAGEMENT SYSTEM

qualityaustria SYSTEM CERTIFIED

ISO 9001:2015 No.07728/0
ISO 14001:2015 No.00997/0
ISO 45001:2018 No.01121/0