STATIC MIXER

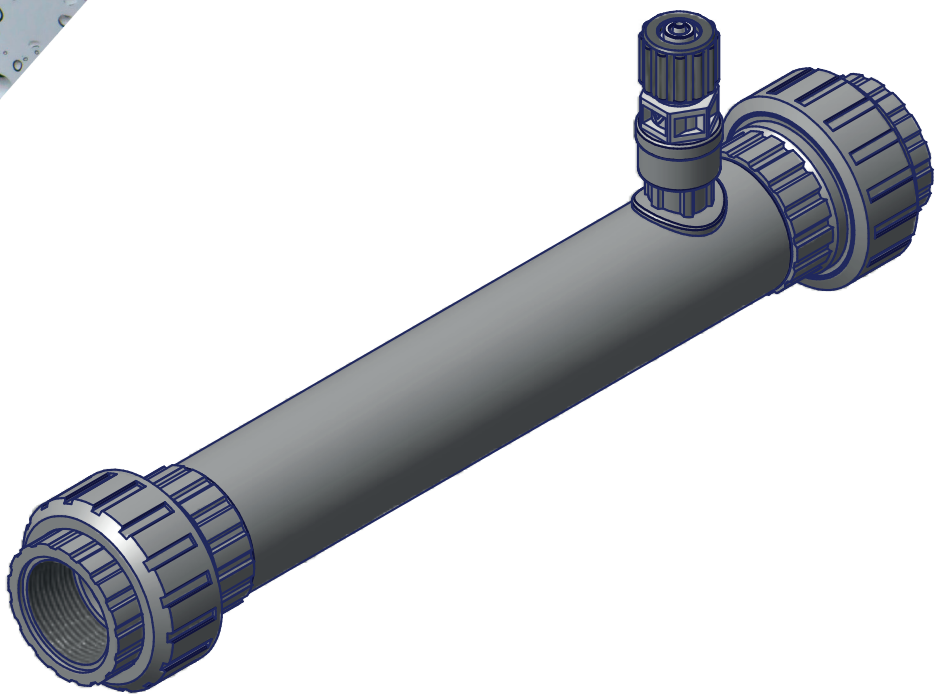

PVC Mixers with Injection Port are designed for blending light-viscosity chemicals into a water stream. Each mixer is constructed in PVC different sizes and it is filled of PP mixing elements. They use Pall rings (diam. 15) mixing elements to minimize pressure loss.

- Excellent static mixing with low pressure drop
- No moving parts
- PVC made
- Filled with PP mixing elements
- Pressure drop: from 0,2 bar for 5 m^3/h
- 1/2” injection valve - 4x6 / 0,3 bar.
- Max pressure 8 bar.
- Max working temperature 40°C / 104°F

CODE	FITTING SIZE	PRESSURE LOSS	INJECTION VALVE	VISCOSITY	INSPECTIONABLE	BALL RINGS
108.6063.1	G 1 1/4”	0,2 bar for 5 m^3/h	1/2”	0-200 cPs	-	50 pcs
108.6077.1	G 1 1/4”	0,2 bar for 5 m^3/h	1/2”	0-200 cPs	x	90 pcs
108.6137.1	G 1/2”	0,2 bar for 5 m^3/h	1/2”	0-200 cPs	x	90 pcs
108.6199.1	G 2”	0,2 bar for 5 m^3/h	1/2”	0-200 cPs	x	110 pcs

Via Donatori di Sangue, 1 - 02100 Rieti (Italy)
+39 074622841 | emecpumps.com

Specifications subject to change without notice | R2025

emec
SIMPLE AS WATER

IQNET CERTIFIED MANAGEMENT SYSTEM
qualityaustria SYSTEM CERTIFIED
ISO 9001:2015 No.07728/0
ISO 14001:2015 No.00997/0
ISO 45001:2018 No.01121/0

LOAD LOSS GRAPHS

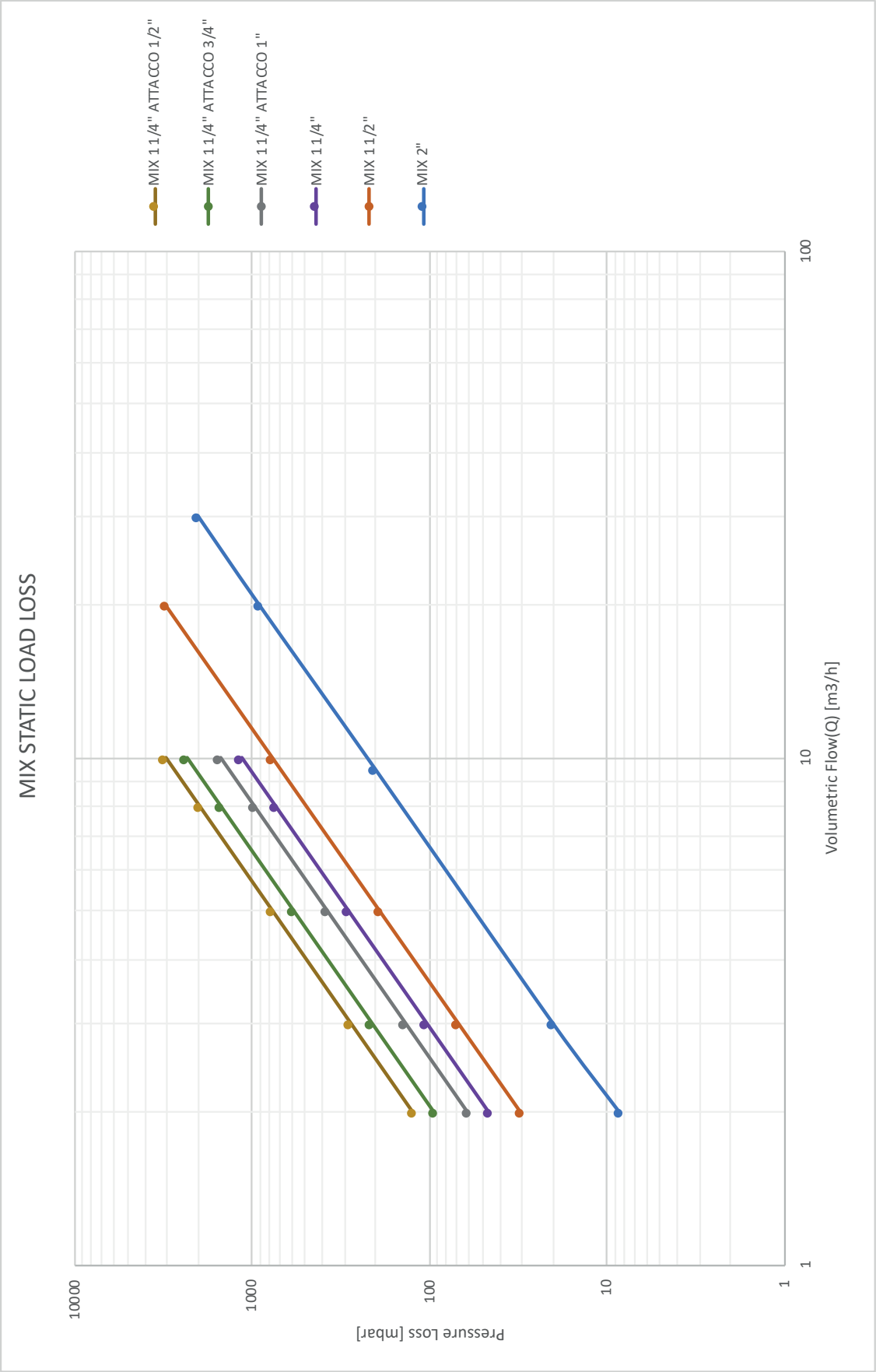

Via Donatori di Sangue, 1 - 02100 Rieti (Italy)
+39 074622841 | emecpumps.com

Specifications subject to change without notice | R2025

emec SIMPLE AS WATER

IQNET CERTIFIED MANAGEMENT SYSTEM

qualityaustria SYSTEM CERTIFIED
ISO 9001:2015 No.07728/0
ISO 14001:2015 No.00997/0
ISO 45001:2018 No.01121/0

DIMENSIONS

DIMENSIONS 1”

Unit: mm

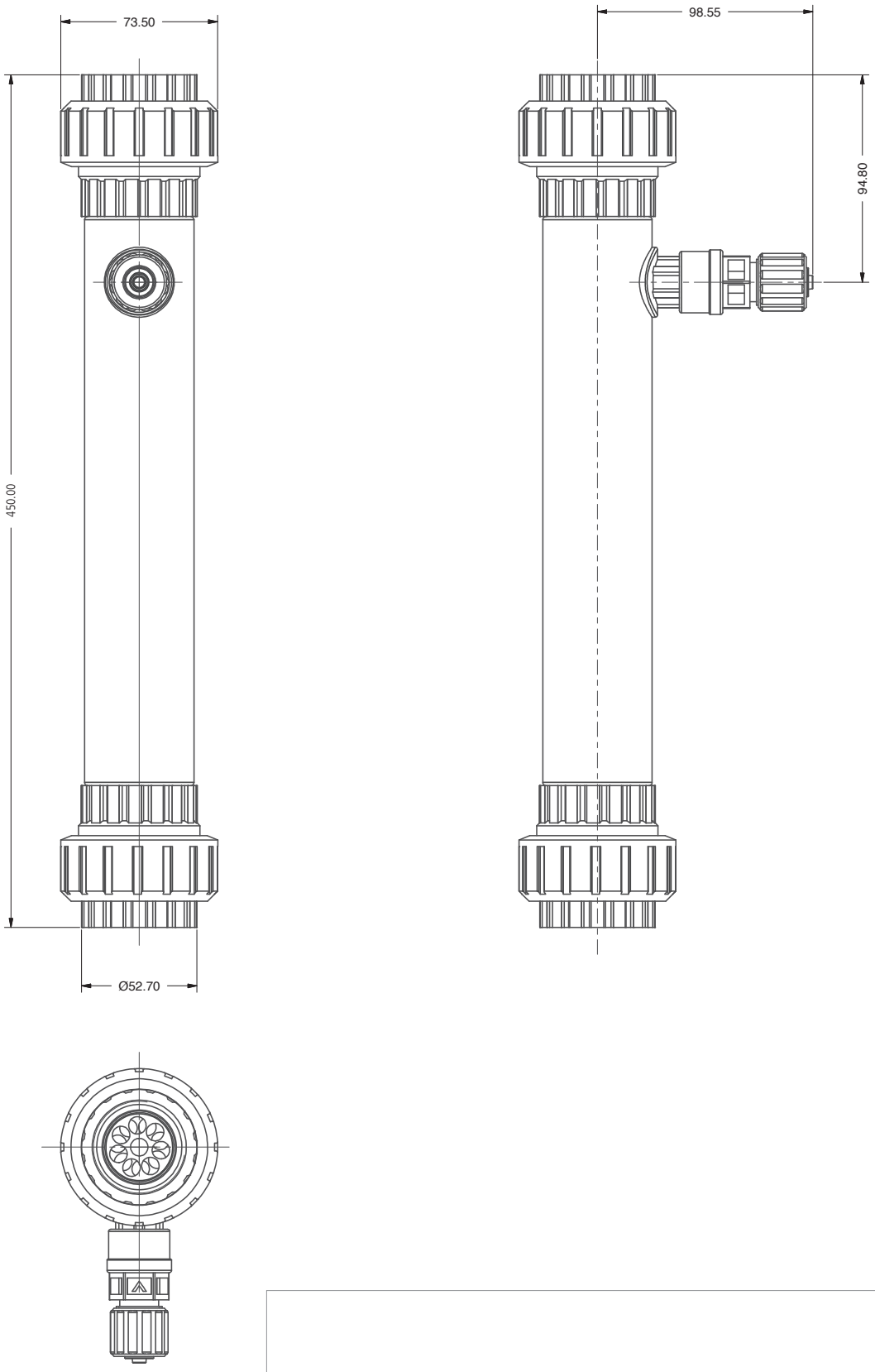

Via Donatori di Sangue, 1 - 02100 Rieti (Italy)
+39 074622841 | emecpumps.com

Specifications subject to change without notice | R2025

emec SIMPLE AS WATER

IQNET CERTIFIED MANAGEMENT SYSTEM
qualityaustria SYSTEM CERTIFIED
ISO 9001:2015 No.07728/0
ISO 14001:2015 No.00997/0
ISO 45001:2018 No.01121/0

DIMENSIONS

DIMENSIONS 1 1/4”

Unit: mm

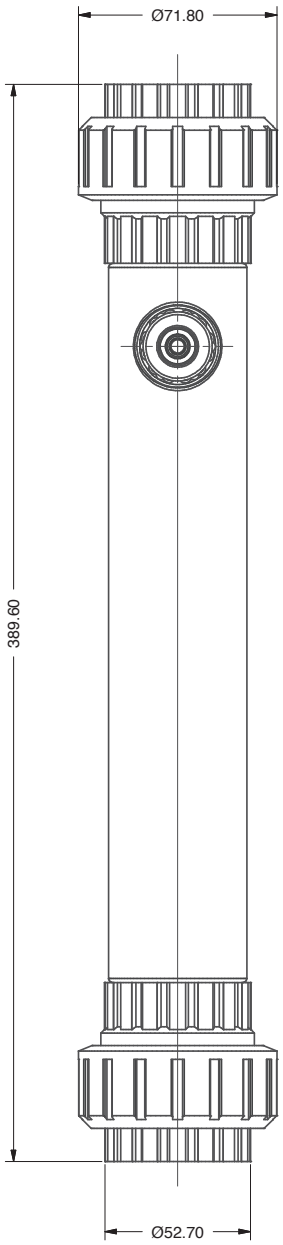

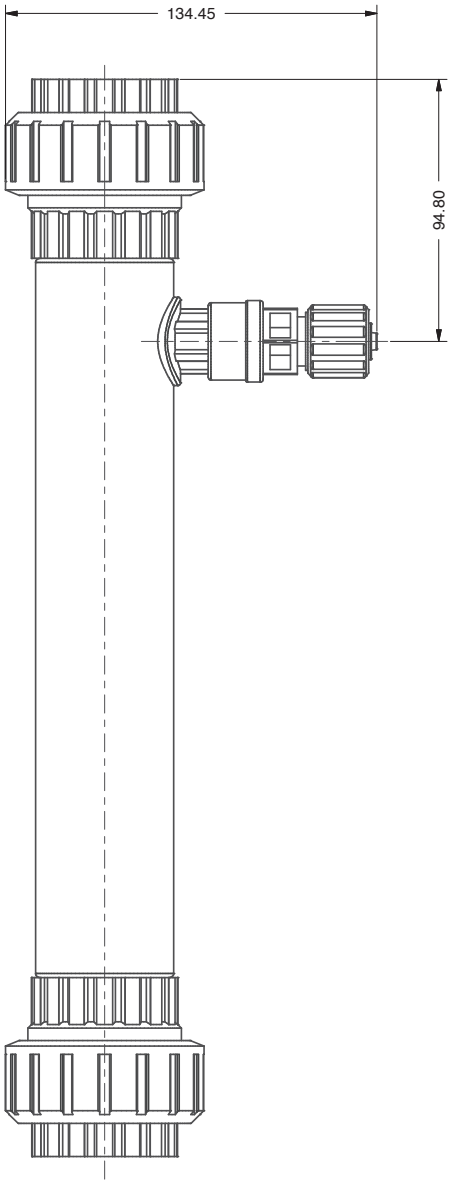

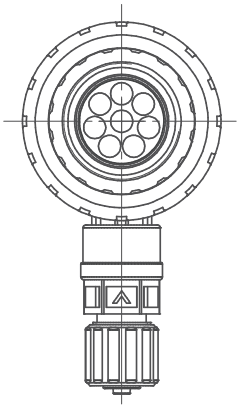

Via Donatori di Sangue, 1 - 02100 Rieti (Italy)
+39 074622841 | emecpumps.com

Specifications subject to change without notice | R2025

emec
SIMPLE AS WATER

IQNET CERTIFIED MANAGEMENT SYSTEM
qualityaustria
SYSTEM CERTIFIED
ISO 9001:2015 No.07728/0
ISO 14001:2015 No.00997/0
ISO 45001:2018 No.01121/0

DIMENSIONS

DIMENSIONS 1 1/2”

Unit: mm

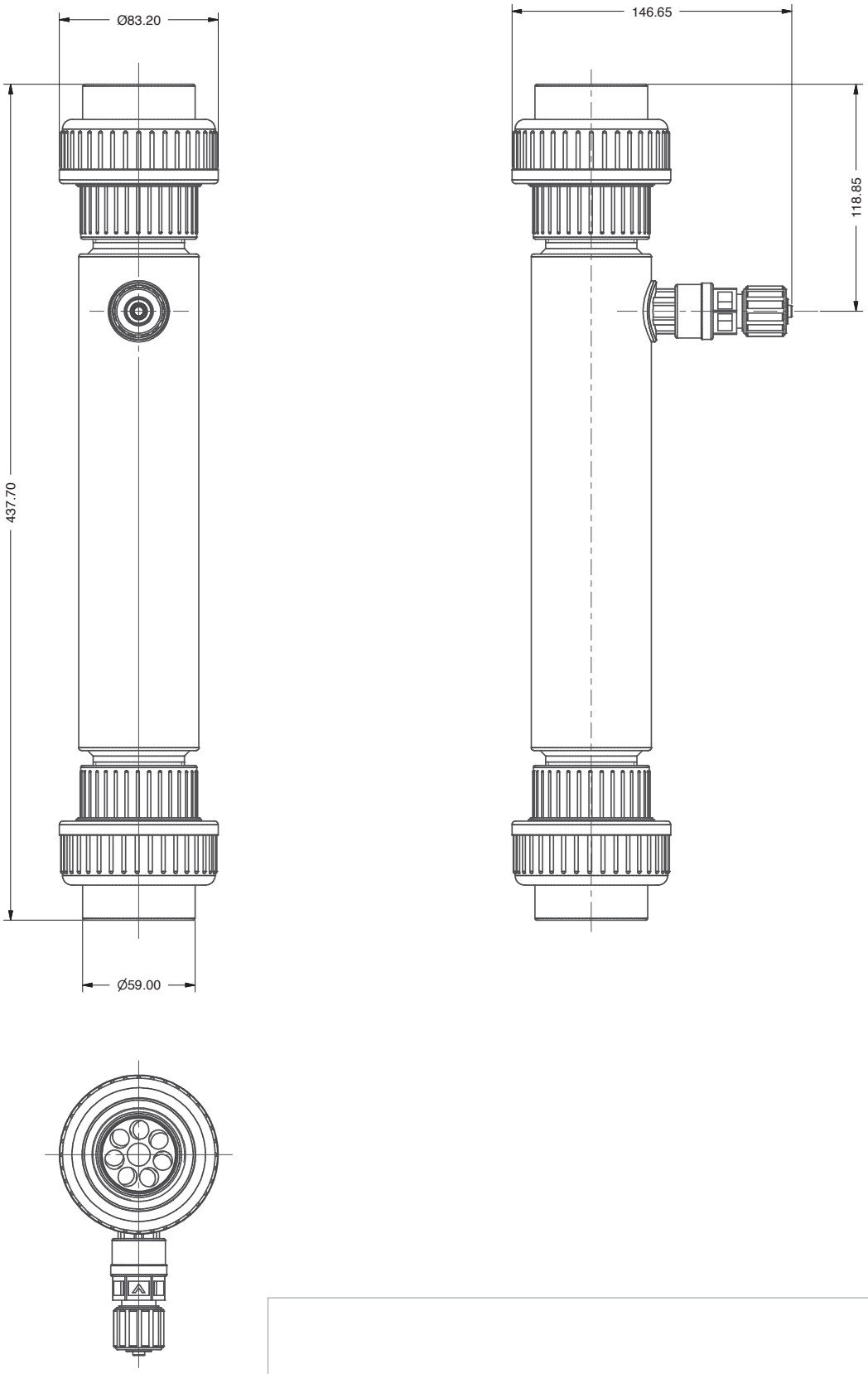

Via Donatori di Sangue, 1 - 02100 Rieti (Italy)
+39 074622841 | emecpumps.com

Specifications subject to change without notice | R2025

emec SIMPLE AS WATER

IQNET CERTIFIED MANAGEMENT SYSTEM

qualityaustria SYSTEM CERTIFIED

ISO 9001:2015 No.07728/0
ISO 14001:2015 No.00997/0
ISO 45001:2018 No.01121/0

DIMENSIONS 2”

Unit: mm

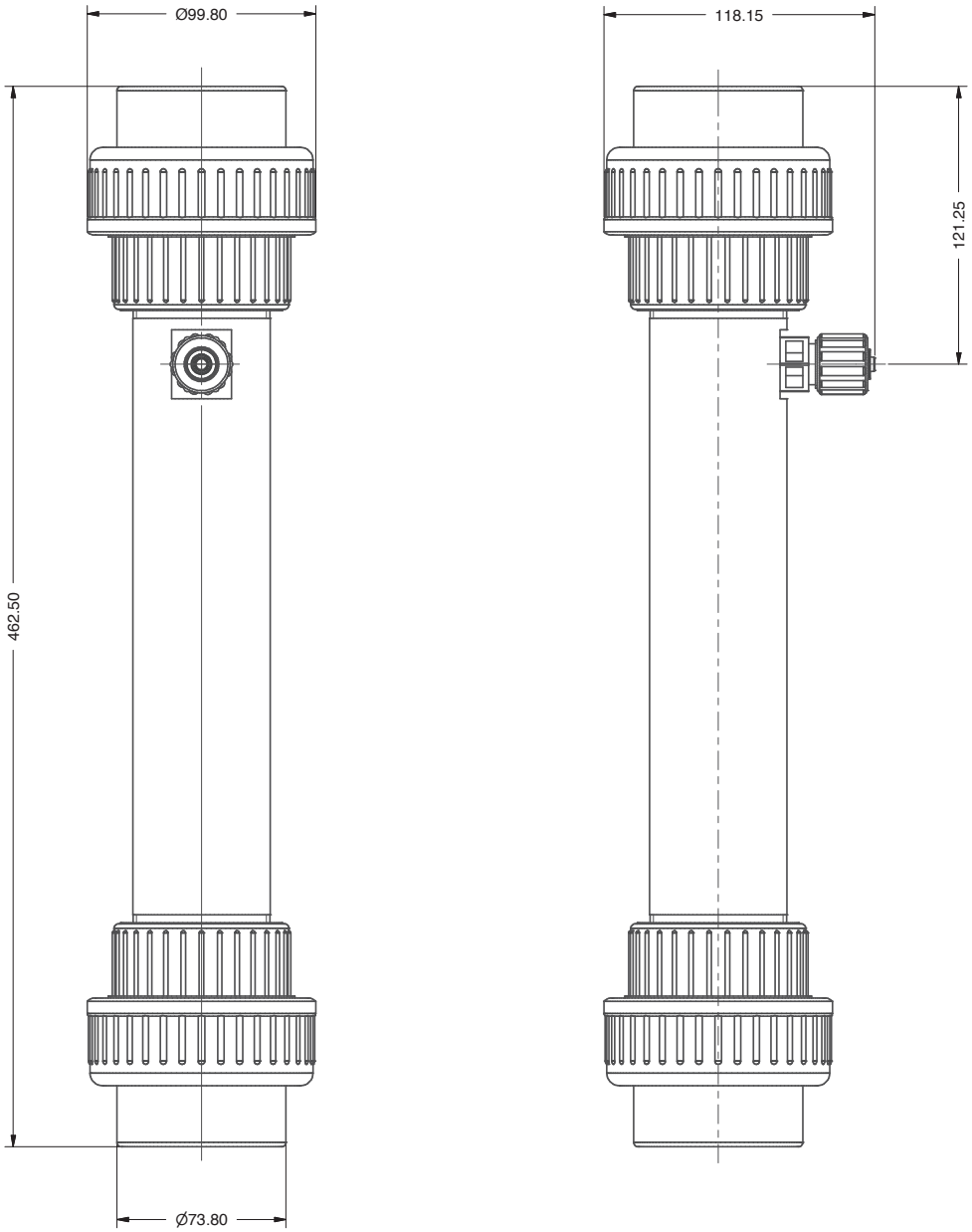

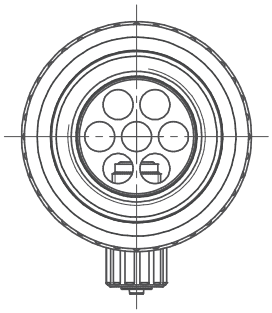

Via Donatori di Sangue, 1 - 02100 Rieti (Italy)
+39 074622841 | emecpumps.com

Specifications subject to change without notice | R2025

emec
SIMPLE AS WATER

IQNET CERTIFIED MANAGEMENT SYSTEM
qualityaustria
SYSTEM CERTIFIED
ISO 9001:2015 No.07728/0
ISO 14001:2015 No.00997/0
ISO 45001:2018 No.01121/0