# "K PLUS" series metering pumps

# Data Sheet

R100523

- Foot mounted
- Microprocessor technology
- Constant or proportional feeding
- Manual stroke length adjustment
- Manual venting (K) or self venting (KA) pump head
- Enclosure .....PP
- Environment temperature.....10-45°C (55-113°F)
- Chemical temperature.....0-50°C (32-122°F)
- Transportation and storage temperature .....-10-50°C (14-122°F)
- Altitude .....2000 m
- Installation class .....II
- Pollution level.....2
- Audible noise.....73.4 db(A)
- Protection degree .....IP65 (% working RU: 85% T<=40°C; 70% T=50°C - without condensing water)

CE

c UL us LISTED (on request)

## Configuration Code

| MODELS | | | |
|---|---|---|---|
| Code K | Code KA | MOD. | DECRIPTION |
| **MU** | **AU** | K PLUS | Constant proportional pump with level control. Working mode:<br>- constant<br>- constant with divider (1/10)<br>- pulse divider (1/10; 10/100; 100/1000)<br>- pulse multiplier (1/10)<br>- mA signal current (0/4 mA = 0 pulses: 20mA = max pulses) |
| **PO** | **PA** | KCO PLUS | Constant pump with speed reducer (1/10) |
| **PL** | **UA** | KCL PLUS | Constant pump with level control. Speed reducer (1/10) |

| CAPACITIES | | | | |
|---|---|---|---|---|
| **K** | | | **Hoses** | **Pump head** |
| **2001** | 1 l/h at 20 bar | 0.26 GPH at 290 PSI | 4 x 6 | I |
| **1802** | 2 l/h at 18 bar | 0.53 GPH at 261 PSI | 4 x 6 | L |
| **1504** | 4 l/h at 15 bar | 1.06 GPH at 217 PSI | 4 x 6 | L |
| **1005** | 5 l/h at 10 bar | 1.32 GPH at 102 PSI | 4 x 6 | L |
| **0808** | 8 l/h at 8 bar | 2.11 GPH at 116 PSI | 4 x 6 | L |
| **0510** | 10 l/h at 5 bar | 2.64 GPH at 58 PSI | 4 x 6 | L |
| **0218** | 18 l/h at 2 bar | 4.76 GPH at 29 PSI | 6 x 8 | M |
| **KA** | | | **Hoses** | **Pump head** |
| **1801** | 1 l/h at 18 bar | 0.26 GPH at 261 PSI | 4 x 6 | LA |
| **1503** | 3 l/h at 15 bar | 0.79 GPH at 217 PSI | 4 x 6 | LA |
| **103.5** | 3.5 l/h at 10 bar | 0.92 GPH at 102 PSI | 4 x 6 | LA |
| **100.5** | 0.5 l/h at 10 bar | 0.13 GPH at 102 PSI | 4 x 6 | JA |
| **085.5** | 5.5 l/h at 8 bar | 1.45 GPH at 116 PSI | 4 x 6 | LA |
| **057.5** | 7.5 l/h at 5 bar | 1.98 GPH at 58 PSI | 4 x 6 | LA |
| **0213** | 13 l/h at 2 bar | 3.43 GPH at 29 PSI | 6 x 8 | MA |

## Model K MU 2001 K 00 00

| LIQUID ENDS | | | | | | | | |
|---|---|---|---|---|---|---|---|---|
| | **HEAD** | **ORINGS** | **VALVE** | | **DIAPHRAGM** | **HOSES [1]** | | **VISCOSITY** |
| | | | Body | Balls | | Delivery | Suction | Max CPS |
| K | PVDF | FKM B | PVDF | Ceramic | PTFE | PVDF | PVC | 100 |
| P | PVDF | EPDM | PVDF | Ceramic | PTFE | PVDF | PVC | 100 |
| Y | PVDF | Nytrile | PVDF | Ceramic | PTFE | PVDF | PVC | 100 |
| V | PP | FKM B | PP | Ceramic | PTFE | PVDF | PVC | 100 |
| D | PP | EPDM | PP | Ceramic | PTFE | PE | PVC | 100 |
| W | PP | Nytrile | PP | Ceramic | PTFE | PE | PVC | 100 |
| J | PVDF | FKM B + PTFE | PVDF | Ceramic | PTFE | PVDF | PVC | 100 |
| M | PVDF | EPDM + PTFE | PVDF | Ceramic | PTFE | PVDF | PVC | 100 |
| A | Acrylic | FKM B | PVDF | Ceramic | PTFE | PVDF | PVC | 100 |
| Z | SS | FKM B | SS | SS | PTFE | N/A | N/A | 100 |
| $ | Acrylic | FKM B | PP | SS + Hastelloy spring | PTFE | PP | PVC | 8000 [2] |

[1] Size may be different from standard.

| POWER SUPPLY | |
|---|---|
| **00** | 230 VAC Schuko plug |
| **0S** | 230 VAC australian plug |
| **01** | 230 VAC without plug |
| **03** | 115 VAC US plug |
| **04** | 24 VAC without plug |
| **05** | 12 VDC * |
| **07** | 24 VDC |

* On some models only.

Via Donatori di Sangue, 1 - 02100 Rieti (Italy)
+39 074622841 | emecpumps.com

emec SIMPLE AS WATER

IQNET CERTIFIED MANAGEMENT SYSTEM

qualityaustria SYSTEM CERTIFIED
ISO 9001:2015 No.07728/0
ISO 14001:2015 No.00997/0
ISO 45001:2018 No.01121/0

Specifications subject to change without notice | R2025

# Technical features

| INFORMATION FOR K PLUS | | | | | | | | |
|---|---|---|---|---|---|---|---|---|
| Models | Strokes speed | | Stroke length range reliability | Power consumption at max flow (230 VAC) | Power consumption at max flow (115 VAC) | Power consumption at max low (24 VAC/ 24VDC) | Power consumption at max low (12 VDC) | Weight |
| | min | max | | | | | | |
| **2001** | 18 | 180 | from 30% to 100% | 19 Watt | 24 Watt | 12 Watt | 8.8 Watt | 4.1 Kg (9.02 Lbs) |
| **1802** | 18 | 180 | | | | | | |
| **1504** | 18 | 180 | | | | | | |
| **1005** | 18 | 180 | | | | | | |
| **0808** | 18 | 180 | | | | | | |
| **0510** | 18 | 180 | | | | | | |
| **0501** | 18 | 180 | | | | | | |
| **0218** | 18 | 180 | | | | | | |
| **INFORMATION FOR KA MODELS** | | | | | | | | |
| **1801** | 18 | 180 | from 30% to 100% | 19 Watt | 24 Watt | 12 Watt | 8.8 Watt | 4.1 Kg (9.02 Lbs) |
| **1503** | 18 | 180 | | | | | | |
| **103.5** | 18 | 180 | | | | | | |
| **100.5** | 18 | 180 | | | | | | |
| **085.5** | 18 | 180 | | | | | | |
| **057.5** | 18 | 180 | | | | | | |
| **0213** | 18 | 180 | | | | | | |

| CAPACITY | | | | | | | | |
|---|---|---|---|---|---|---|---|---|
| K PLUS | FLOW | | | | cc per STROKE | | Maximum pressure | |
| | min cc/h | max l/h | Min GPH | Max GPH | min | max | bar | PSI |
| **2001** | 30 | 1 | 0,01 | 0,26 | 0,03 | 0,09 | 20 | 290 |
| **1802** | 60 | 2 | 0,02 | 0,53 | 0,06 | 0,19 | 18 | 261 |
| **1504** | 120 | 4 | 0,03 | 1,1 | 0,1 | 0,37 | 15 | 217,5 |
| **1005** | 150 | 5 | 0,04 | 1,3 | 0,1 | 0,46 | 10 | 145 |
| **0808** | 240 | 8 | 0,06 | 2,1 | 0,2 | 0,74 | 8 | 116 |
| **0510** | 300 | 10 | 0,08 | 2,6 | 0,3 | 0,93 | 5 | 72,5 |
| **0501** | 30 | 1 | 0,01 | 0,3 | 0 | 0,09 | 5 | 72,5 |
| **0218** | 540 | 18 | 0,14 | 4,8 | 0,5 | 1,67 | 2 | 29 |

| CAPACITY | | | | | | | | |
|---|---|---|---|---|---|---|---|---|
| KA PLUS | FLOW | | | | cc per STROKE | | Maximum pressure | |
| | min cc/h | max l/h | Min GPH | Max GPH | min | max | bar | PSI |
| **1801** | 30 | 1 | 0,01 | 0,26 | 0,03 | 0,09 | 18 | 261 |
| **1503** | 90 | 3 | 0,02 | 0,79 | 0,08 | 0,28 | 15 | 217,5 |
| **103.5** | 105 | 3,5 | 0,03 | 0,9 | 0,1 | 0,32 | 10 | 145 |
| **100.5** | 15 | 0,5 | 0,0039 | 0,13 | 0,1 | 0,32 | 10 | 145 |
| **085.5** | 165 | 5,5 | 0,05 | 1,5 | 0,2 | 0,51 | 8 | 116 |
| **057.5** | 225 | 7,5 | 0,06 | 2 | 0,2 | 0,69 | 5 | 72,5 |
| **0213** | 390 | 13 | 0,1 | 3,4 | 0,4 | 1,2 | 2 | 29 |

| QUANTITY | PACKAGE CONTENT |
|---|---|
| n. 1 | Assembly kit |
| n. 1 | 5 X 20 delayed fuse |
| n. 1 | Level probe with axial foot filter (PVDF) - level probe not in KCO PLUS mod. |
| n. 1 | 0,3 Bar injection valve (PVDF) |
| m 2 | Delivery hose |
| m 2 | Suction hose |
| m 2 | Discharge hose |
| m 2,5 | Input signal cable (only K PLUS) |
| n.1 | Operating manual |

| POWER SUPPLY | FUSE |
|---|---|
| 230 VAC (190-265 VAC) - 50/60 Hz | 1 A |
| 115 VAC (90-135 VAC) - 50/60 Hz | 500 mA |
| 24 VAC (20-32 VAC) - 50/60 Hz | 2A |
| 12 VDC (10-16 VDC) | 3.15A |

Via Donatori di Sangue, 1 - 02100 Rieti (Italy)
+39 074622841 | emecpumps.com

Specifications subject to change without notice | R2025

emec SIMPLE AS WATER

IQNET CERTIFIED MANAGEMENT SYSTEM
qualityaustria SYSTEM CERTIFIED
ISO 9001:2015 No.07728/0
ISO 14001:2015 No.00997/0
ISO 45001:2018 No.01121/0

## Dimension

mm [inches]

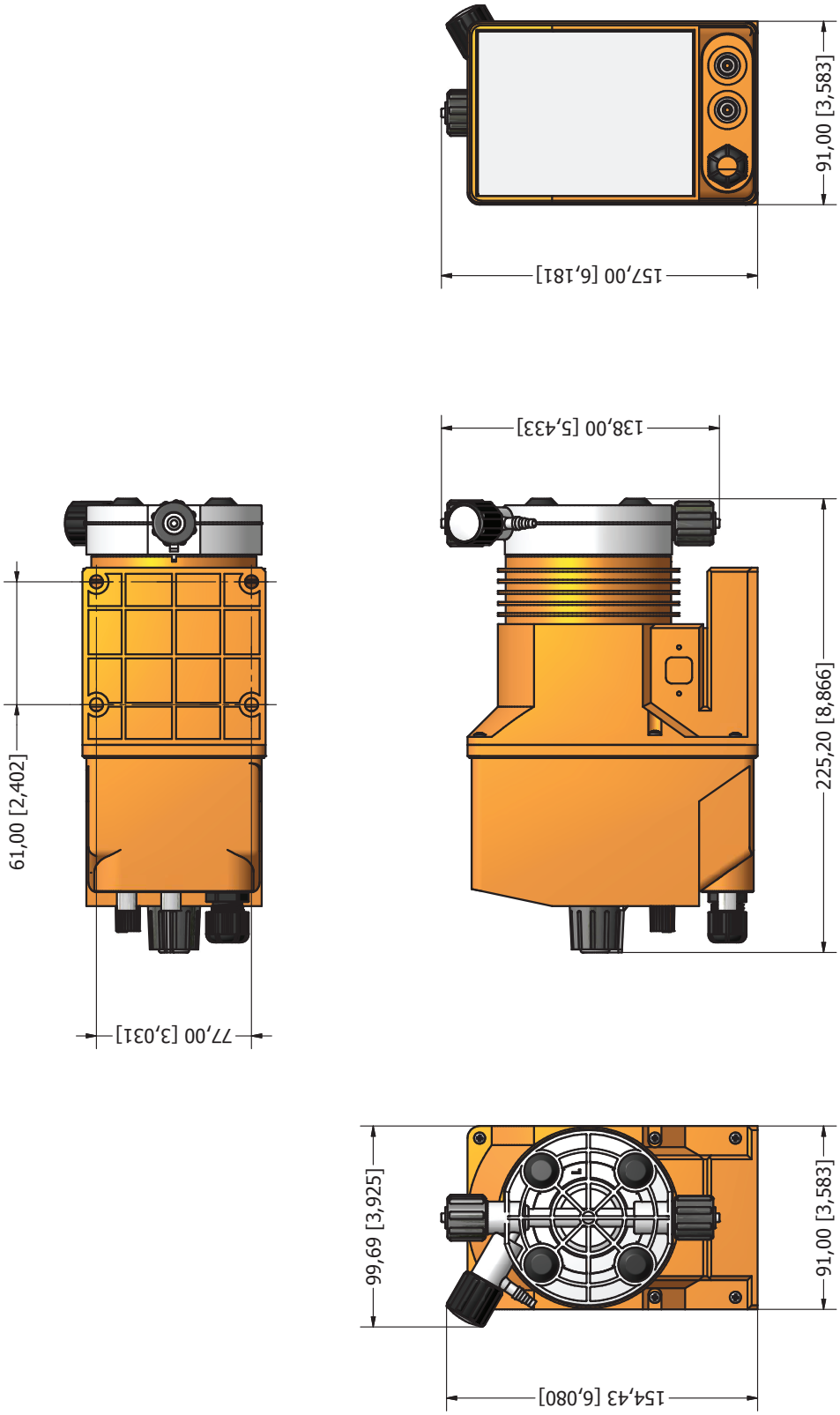


Via Donatori di Sangue, 1 - 02100 Rieti (Italy)
+39 074622841 | emecpumps.com

Specifications subject to change without notice | R2025

emec SIMPLE AS WATER

IQNET CERTIFIED MANAGEMENT SYSTEM

qualityaustria SYSTEM CERTIFIED

ISO 9001:2015 No.07728/0
ISO 14001:2015 No.00997/0
ISO 45001:2018 No.01121/0