"KMS" and "KMSA" series metering pumps Data Sheet

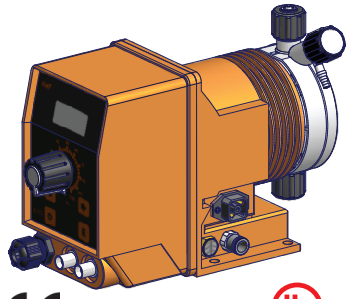

CE

c UL us LISTED (on request)

- Foot mounted
- Microprocessor technology
- Manual stroke length adjustment
- Manual venting (KMS) or self venting (KMSA) PVDF pump head
- Liquid ends (pump head, injection valve, foot filter, delivery hose) .....PVDF
- Enclosure .....PP
- Environment temperature.....10-45°C (55-113°F)
- Chemical temperature.....0-50°C (32-122°F)
- Transportation and storage temperature .....-10-50°C (14-122°F)
- Installation class II
- Pollution level.....2
- Audible noise.....73.4db(A)
- Protection degree .....IP65 (% working RU: 85% T<=40°C; 70% T=50°C - without condensing water)

Configuration Code

K MF 2001 K 00 00

MODELS			
KMS Code	**KMSA Code**	**MOD.**	**DESCRIPTION**
DC	**AD**	KMS DC	Digital constant pump, stand-by input and alarm output and level control.
MF	**AF**	KMS MF	Digital multifunction pump (Constant, Divide, Multiply, PPM, Batch, Volt, mA, %, ml/q, timer) , stand-by and flow sensor input, alarm output and level control. Recovery fault mode, work-pause mode and upkeep mode.
ML	**LA**	KMS CL	Proportional pump for free chlorine (Cl2) control (from 0 to 10,00 mg/l) with level control, supplied without chlorine probe. It operates with chlorine cells mod. ECL1 and ECL6/7/12 (not provided).
PH	**MH**	KMS PH	Proportional pump driven by internal built-in pH meter (0-14 pH) and level control, supplied without pH probe.
RH	**AR**	KMS RH	Proportional pump driven by internal built-in ORP meter (0-1000 mV) and level control, supplied without ORP probe.

KMS								
Model	**FLOW**				**cc per Stroke**		**Max Pressure**	
	min cc/h	max l/h	Min GPH	Max GPH	**min**	**max**	**bar**	**PSI**
2001	0,03	1	0,000008	0,26	0,03	0,09	20	290
1802	0,06	2	0,000016	0,53	0,06	0,19	18	261
1504	0,11	4	0,000029	1,06	0,11	0,37	15	217
1005	0,14	5	0,000037	1,32	0,14	0,46	10	145
0808	0,22	8	0,000058	2,11	0,22	0,74	8	116
0501	0,02	1	0,000007	0,26	0,03	0,09	5	72
0510	0,28	10	0,000074	2,64	0,28	0,93	5	72
0218	0,50	18	0,00013	4,76	0,50	1,67	2	29

KMSA								
Model	**FLOW**				**cc per Stroke**		**Max Pressure**	
	min cc/h	max l/h	Min GPH	Max GPH	**min**	**max**	**bar**	**PSI**
1801	0,03	1	0,000008	0,26	0,03	0,09	18	261
1503	0,08	3	0,000021	0,79	0,08	0,28	15	217
103.5	0,10	3,5	0,000026	0,92	0,10	0,32	10	145
100.5	0.02	0.5	0.01	0.13	0.02	0.05	10	145
085.5	0,15	5,5	0,000040	1,45	0,15	0,51	8	116
057.5	0,21	7,5	0,000055	1,98	0,21	0,69	5	72
0213	0,37	13	0,000098	3,43	0,37	1,20	2	29

LIQUID ENDS								
	HEAD	**ORINGS**	**VALVE**		**DIAPHRAGM**	**HOSES [1]**		**VISCOSITY**
			Body	Balls		Delivery	Suction	Max CPS
K	PVDF	FKM B	PVDF	Ceramic	PTFE	PVDF	PVC	100
P	PVDF	EPDM	PVDF	Ceramic	PTFE	PVDF	PVC	100
Y	PVDF	Nytrile	PVDF	Ceramic	PTFE	PVDF	PVC	100
V	PP	FKM B	PP	Ceramic	PTFE	PVDF	PVC	100
D	PP	EPDM	PP	Ceramic	PTFE	PE	PVC	100
W	PP	Nytrile	PP	Ceramic	PTFE	PE	PVC	100
J	PVDF	FKM B + PTFE	PVDF	Ceramic	PTFE	PVDF	PVC	100
A	Acrylic	FKM B	PVDF	Ceramic	PTFE	PVDF	PVC	100
Z	SS [3]	FKM B	SS	SS	PTFE	N/A	N/A	100

[1] Size may be different from standard.
[2] Using high viscosity pump head mod. $, pump output may results lower in some applications.
[3] Specify on order, the external thread of the valves: conical, cylindrical or NPT. Stainless Steel pump does not fit installation kit (accessories and hoses). Refer to "SS Accessories" table for fittings.

POWER SUPPLY	
00	230 VAC Schuko plug
0S	230 VAC australian plug
01	230 VAC without plug
03	115 VAC US plug
04	24 VAC without plug
05	12 VDC *
07	24 VDC

* On some models only.

SS ACCESSORIES [3]	
Pump head	Fittings
Li	3/8"
Mi	1/2"
Ni	1/2"
Si	3/4"
Ti	3/4"

Via Donatori di Sangue, 1 - 02100 Rieti (Italy)
+39 074622841 | emecpumps.com

emec SIMPLE AS WATER

IQNET CERTIFIED MANAGEMENT SYSTEM

qualityaustria SYSTEM CERTIFIED
ISO 9001:2015 No.07728/0
ISO 14001:2015 No.00997/0
ISO 45001:2018 No.01121/0

Specifications subject to change without notice | R2025

"KMS" and "KMSA" series metering pumps Data Sheet

Technical features

KMS MODELS								
Models	Strokes speed min strokes hour	Strokes speed max strokes minute	Stroke length range reliability	Power consumption at max flow (230 VAC)	Power consumption at max flow (115 VAC)	Power consumption at max flow (24 VAC)	Power consumption at max flow (12 VAC)	Weight
2001	1	180	from 30% to 100%	19 Watt	24 Watt	12 Watt	8.8 Watt	4.1 Kg (9.02 Lbs)
1802	1	180						
1504	1	180						
1005	1	180						
0808	1	180						
0510	1	180						
0218	1	180						
KMSA MODELS								
1801	1	180	from 30% to 100%	19 Watt	24 Watt	12 Watt	8.8 Watt	4.1 Kg (9.02 Lbs)
1503	1	180						
103.5	1	180						
100.5	1	180						
085.5	1	180						
057.5	1	180						
0213	1	180						

KMS								
Model	FLOW min cc/h	FLOW max l/h	FLOW Min GPH	FLOW Max GPH	cc per Stroke min	cc per Stroke max	Max Pressure bar	Max Pressure PSI
2001	0,03	1	0,000008	0,26	0,03	0,09	20	290
1802	0,06	2	0,000016	0,53	0,06	0,19	18	261
1504	0,11	4	0,000029	1,06	0,11	0,37	15	217
1005	0,14	5	0,000037	1,32	0,14	0,46	10	145
0808	0,22	8	0,000058	2,11	0,22	0,74	8	116
0501	0,02	1	0,000007	0,26	0,03	0,09	5	72
0510	0,28	10	0,000074	2,64	0,28	0,93	5	72
0218	0,50	18	0,00013	4,76	0,50	1,67	2	29

KMSA								
Model	FLOW min cc/h	FLOW max l/h	FLOW Min GPH	FLOW Max GPH	cc per Stroke min	cc per Stroke max	Max Pressure bar	Max Pressure PSI
1801	0,03	1	0,000008	0,26	0,03	0,09	18	261
1503	0,08	3	0,000021	0,79	0,08	0,28	15	217
103.5	0,10	3,5	0,000026	0,92	0,10	0,32	10	145
100.5	0.02	0.5	0.01	0.13	0.02	0.05	10	145
085.5	0,15	5,5	0,000040	1,45	0,15	0,51	8	116
057.5	0,21	7,5	0,000055	1,98	0,21	0,69	5	72
0213	0,37	13	0,000098	3,43	0,37	1,20	2	29

QUANTITY	PACKAGE CONTENT
n. 1	Assembly kit
n. 1	5 X 20 delayed fuse
n. 1	Level probe with axial foot filter (PVDF)
n. 1	0,3 Bar injection valve (PVDF)
m 2	Delivery hose
m 2	Suction hose
m 2	Discharge hose
m 2,5	Input signal cable
m 2	Alarm/Stand-by cable (MF model)
n.1	Operating manual

POWER SUPPLY	FUSE
230 VAC (190-265 VAC) - 50/60 Hz	1 A
115 VAC (90-135 VAC) - 50/60 Hz	500 mA
24 VAC (20-32 VAC) - 50/60 Hz	2A
12 VDC (10-16 VDC)	3.15A

Via Donatori di Sangue, 1 - 02100 Rieti (Italy)
+39 074622841 | emecpumps.com

emec SIMPLE AS WATER

Specifications subject to change without notice | R2025

IQNET CERTIFIED MANAGEMENT SYSTEM
qualityaustria SYSTEM CERTIFIED
ISO 9001:2015 No.07728/0
ISO 14001:2015 No.00997/0
ISO 45001:2018 No.01121/0

Dimension

mm [inches]

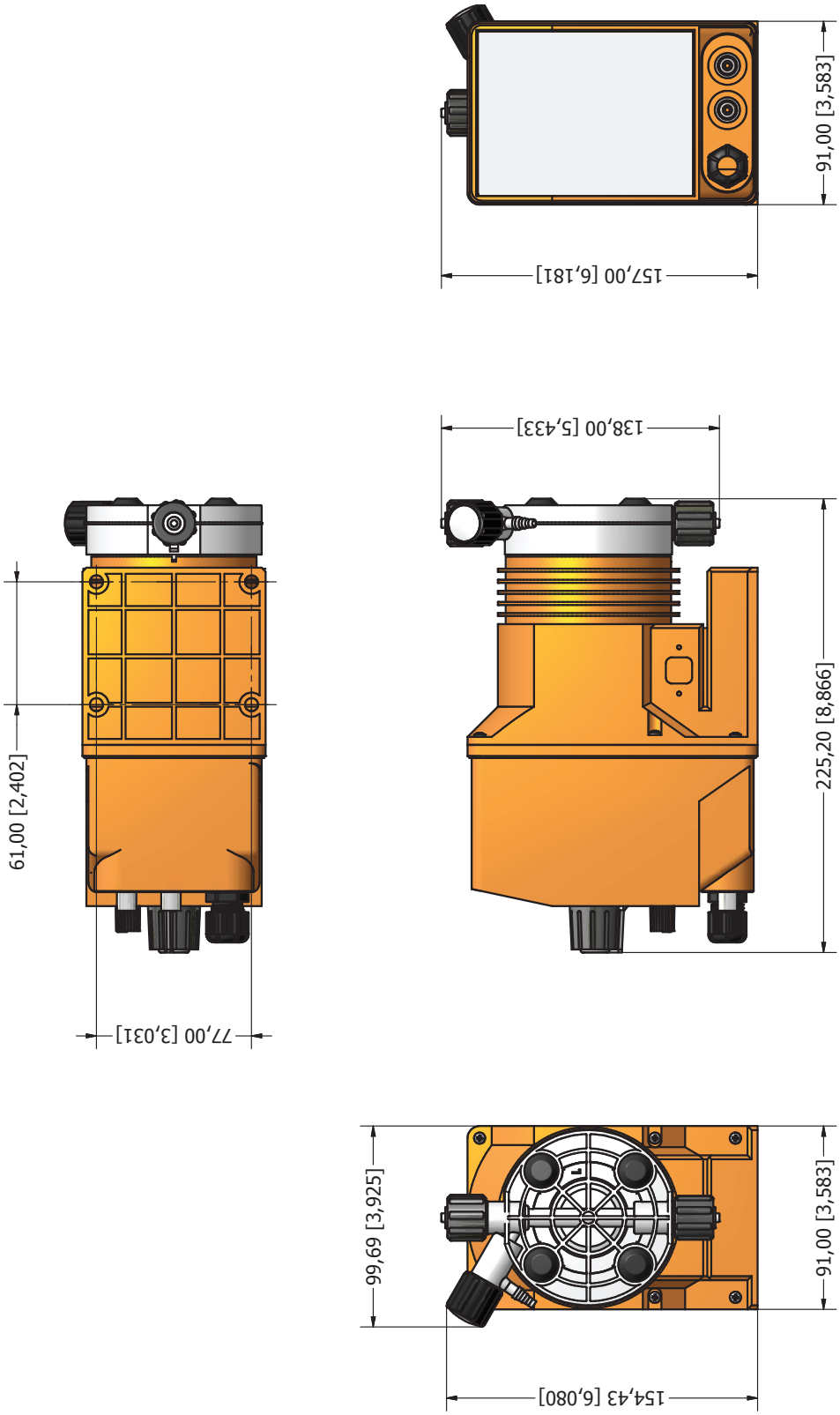

Via Donatori di Sangue, 1 - 02100 Rieti (Italy)
+39 074622841 | emecpumps.com

Specifications subject to change without notice | R2025

emec SIMPLE AS WATER

IQNET CERTIFIED MANAGEMENT SYSTEM
qualityaustria SYSTEM CERTIFIED
ISO 9001:2015 No.07728/0
ISO 14001:2015 No.00997/0
ISO 45001:2018 No.01121/0