This operating instructions contains safety information that if ignored can endanger life or result in serious injury. They are indicated by this icon.

Use of this pump with radioactive chemicals is forbidden!

OPERATING INSTRUCTIONS MANUAL FOR "RACV" PNEUMATIC DOSING PUMP

Keep the pump protected from sun and water.
Avoid water splashes.

Please read it carefully!

English language

Product Description
Descrizione Prodotto

Electromagnetic dosing pump, R series
Pompa dosatrice elettromagnetiche, serie R

Product Identification Codes
(the "_" symbols complete the product code based on the configuration of the variants)
Codici Identificativi Prodotto
(i simboli "_" completano il codice del prodotto in base alla configurazione delle varianti)

RAC _____
RAP _____
RAV _____

GENERAL SAFETY GUIDELINES

Danger!

In emergencies the pump should be switched off immediately! Disconnect the power cable from the power supply!

When using pump with aggressive chemicals observe the regulations concerning the transport and storage of aggressive fluids!

When installing always observe national regulations!

Manufacturer is not liable for any unauthorized use or misuse of this product that may cause injury, damage to persons or materials.

Caution!

Pump must be accessible at all times for both operating and servicing. Access must not be obstructed in any way!

Feeder should be interlocked with a no-flow protection device.

Pump and accessories must be serviced and repaired by qualified and authorized personnel only!

Always discharge the liquid end before servicing the pump!

Empty and rinse the liquid end before work on a pump which has been used with hazardous or unknown chemicals!

Always read chemical safety datasheet!

Always wear protective clothing when handling hazardous or unknown chemicals!

Index

Introduction 4
Functioning mode 4
Technical features 4
Pumps connections 5
Pump's package 6
Basic operations 7
How does it work? 7
O-rings, maintenance and repair operations 8
Repair 8
Delivery curves 9
Dimensions 10

The "RACV" series dosing pumps are the ideal solution for small and medium dosing of liquid products by compressed air.

Functioning mode:

Pneumatic functioning mode. In the pneumatic area of the pump, the compressed air produces a diaphragm's movement that pushes out the liquid through the delivery hose. The vacuum created by the diaphragm movement takes the liquid inside the pump head from the suction hose.

Solenoid valve opens and closes air that operates the diaphragm. The solenoid valve should be driven by a PLC or any other equipment that can operate it with a direct voltage supplied in pulses, the valve is driven to open to push the diaphragm and then closed to let the diaphragm go back.

Technical features:

Air consumption: 0,020 liters per injection
Air supply (pressure): 6÷8 bar
Max injection per minute: 120
Working temperature: 0÷50 °C (32°÷122°F)
Ceramic or Stainless Steel double ball valves (Ø6mm)
Liquid ends: PP, Orings (on demand: Viton, EP, WAX)
PP glass filled case box
PTFE membrane
Stroke lenght adjustment
Solenoid valve: 24VAC, 48VDC, 115VAC, 230VAC / 8W (specify)

Wear always protective clothes as masks, gloves, safety glasses, ear plugs or ear muffs, and further security devices during ALL installation procedure and while handling chemicals.

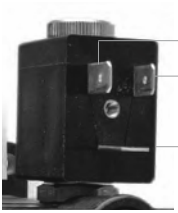

to delivery hose

Electrovalve

Compressed Air input (6x8)

Manual priming button

Air / pump head discharge knob

Flow control knob

to suction hose

to discharge hose

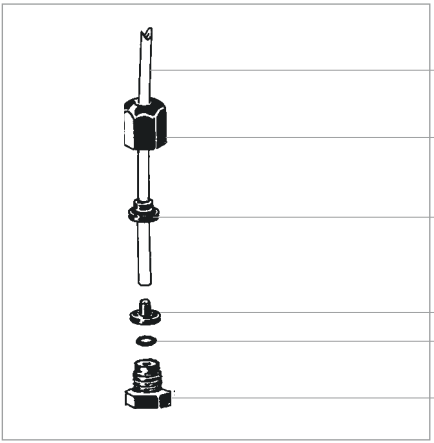

Delivery hose (PE hard)

Hose nut

Clamping ring

Nozzle

O-ring

Discharge valve connection

Included into package::

n.1	1/2" 4x6 or 6x8 foot filter + valve
n.1	1/2" 4x6 or 6x8 injection valve
m 2	delivery hose
m 2	suction hose
m 2	discharge hose
n.1	this operating instruction manual

PLEASE DO NOT TRASH PACKAGING.
IT CAN BE USED TO RETURN THE PUMP.

Commissioning the pump:

Make sure that the pump is fastened into place firmly and will not vibrate during use!

Ensure that the pump is accessible at all times for operating and maintenance purposes!

Suction and discharge valves must be in vertical position!

The metering pump must be installed with the pump's basement on horizontal position!

Assembly and install hoses:

The suction hose (PVC flexible) should be short and placed vertical to avoid air bubble collecting!

Calculate cross section and length to ensure that negative pressure in the suction hose does not reach the vapour pressure for chemical's feed!

FREE END OF SUCTION HOSE SHOULD BE INSERTED
JUST ABOVE THE BASE OF NOZZLE!

USE ONLY HOSES COMPATIBLES WITH PRODUCT TO DOSE.
PLEASE REFERS TO "CHEMICAL COMPATIBILITY TABLE" OF PRODUCT TO DOSE!

3 installing modes:

- Horizontal (with bracket) mounting
- Wall mouting
- "DIN" mounting

Multiple pumps installation (side by side)

PRIMING

To prime the pump without touching chemicals please perform these operations:

- connect all hoses into proper places (delivery hose, suction hose, outgassing hose).
- open outgassing valve and turn on the pump.
- set pump's single injection at 100%;
- press the priming button until the pump head is filled up.

Connect the pump to the compressed air hose. Let compressed air enter into the pump.
All air inside the pump head will exit through the outgassing outlet. When product will leak from it, close immediately the outgassing valve. If dosing product is particularly dense, to facilitate the priming, insert on vent pipe a syringe of 20 cc and suck inside.

DOSING

Pump's technical features are printed on a label located on pump's box: model, supply voltage, working counterpressure (Kpa/bar) and pump capacity (l/h). All these dosing information are calculated by dosing water at 20 °C temperature, at the maximum counterpressure reported on the label, using the injection valve and the % knob set to maximum. Dosing accuracy is ± 2% l/h at constant maximum counterpressure and 1 cps flow (max viscosity: 60 cps).

Caution: injection capacity is a constant value but a variation in counterpressure or product's viscosity may cause some changes. For further details see "Delivery curves" paragraph.

HOW DOES IT WORK?

"RACV" pneumatic dosing pump works only with compressed air without lubrificant and/or condensed water. Air supply pressure range must be at 6bar (87PSI) (±10%).

At the max injection/min value, 120 injection/min, the pump has a 0.5 seconds working cycle: 0.25 seconds active (compressed air is in the pump) and 0.25 passive (compressed air is not in the pump).

Solenoid valve and PLC for compressed air control must be regulated on this values.

SOLENOID VALVE

The solenoid valve should be driven by a PLC or any other equipment that can operate it with a direct voltage supplied in pulses, frequency must be 2 Hertz with a 50% duty cycle.
Connect the solenoid valve using the standard connector. Attention: solenoid valves can have several power supplies, power supply is specified on the solenoid valve label.

The valve sealings are provided in 4 different types to satisfy different chemical compatibility issues. The elastomer that will best fit the requested needing can be found on the manufacturer compatibility table. Get in touch with customer support if needed.

Elastomer	Suggested Usage	Manufacturer Code
Fluorocarbon	acid based product	FP
Ethylenepropylene	alkali based product	EP
Nitrile	wax based product	WAX

MAINTENANCE

Every month (when in normal use) pump and accessories should be checked for proper operation.
For a correct maintenance, please perform following tasks:

- check electrical connections
- check liquid end screws
- check discharge line connections
- check discharge and suction valve connections
- check the entire liquid end for leakage

REPAIR

All repair measures must be performed by authorized and qualified personnel. If pump needs to be repaired in manufacturer's factory send it only if it has been cleaned and after the liquid end has been rinsed!

If, despite pump's emptying and cleaning, there are still possible safety hazards the information must be declared on return's form!

If pump needs a replacement use only ORIGINAL spare parts!

Single Injection 0,14

06 01

l/h 01

bar 06

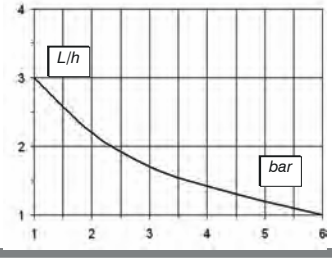

Single Injection 0,42

06 03

l/h 03

bar 06

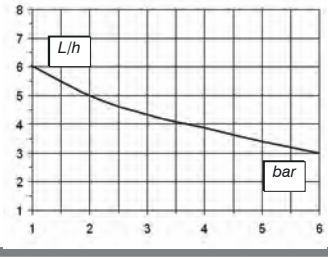

Single Injection 0,83

06 06

l/h 06

bar 06

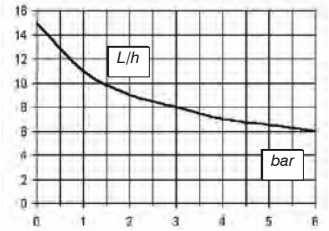

Single Injection 1,66

06

l/h 12

bar 06

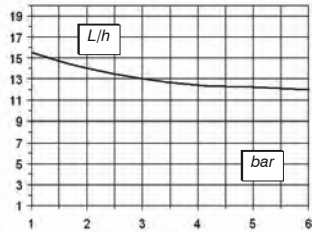

Single Injection 0,21

06 1

l/h 1,5

bar 06

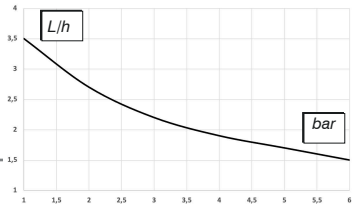

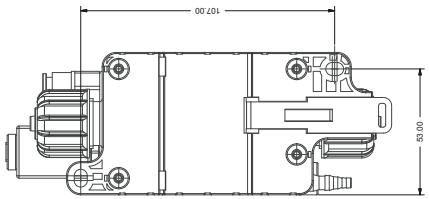
107.00
53.00

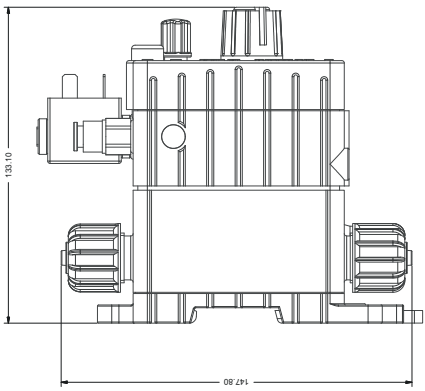
133.10
147.80

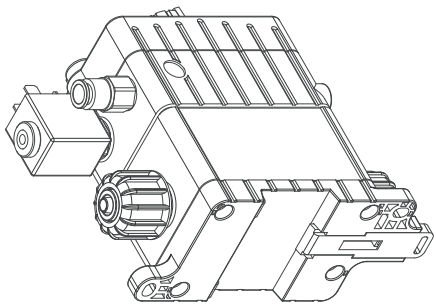

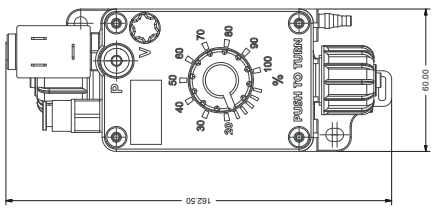
PUSH TO TURN
20
30
40
50
60
70
80
90
100
%
60.00
162.50

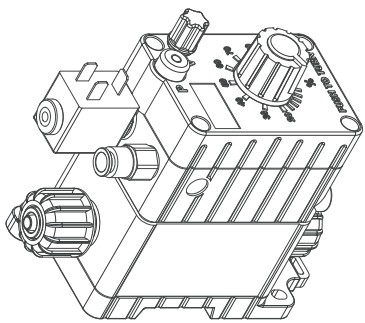

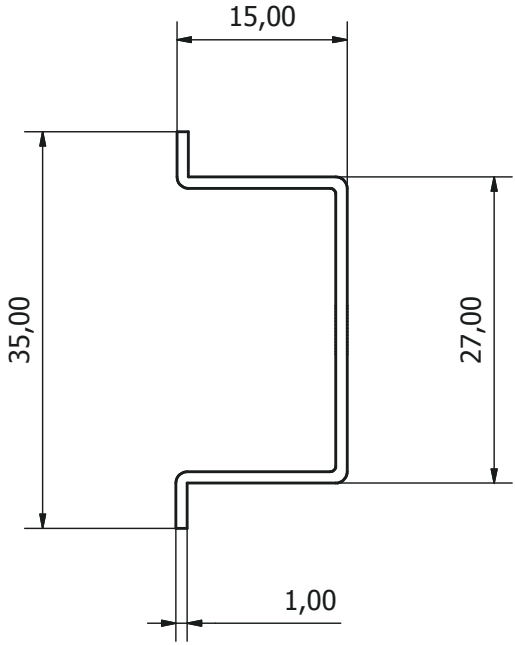
15,00
35,00
27,00
1,00

PRECAUTIONS RELATING TO DIRECTIVES, REGULATIONS AND STANDARDS

§ CE/EU and UKCA marking

We guarantees that this product meets the essential requirements of the applicable Directives and Regulations based on the following specifications. Please carefully consider the following specifications for use of the product in European Union member countries and the United Kingdom.

• CE/EU harmonized directives and standards

Directives
DIRECTIVE 2006/42/EC
DIRECTIVE 2014/35/EU
DIRECTIVE 2014/30/EU
DIRECTIVE 2011/65/EU
DELEGATED DIRECTIVE (EU) 2015/863

Harmonized standards
EN ISO 12100
EN 809
EN ISO 20361
EN IEC 61326-1
EN 61010-1
EN IEC 63000

• UKCA harmonized regulations and standards

Regulations
2008 No. 1597
2008 2016 No. 1091
2016 No. 1101
2012 No. 3032

Harmonized standards
BS EN ISO 12100
BS EN 809
BS EN ISO 20361
BS EN IEC 61326-1
BS EN 61010-1
BS EN IEC 63000

Disposal of end-of-life equipment by users

This symbol warns you not to dispose of the product with normal waste. Respect human health and the environment by giving the discarded equipment to a designated collection center for the recycling of electronic and electrical equipment. For more information visit the online site.

When dismantling a pump please separate material types and send them according to local recycling disposal requirements. We appreciate your efforts in supporting your local Recycle Environmental Program. Working together we'll form an active union to assure the world's invaluable resources are conserved.