"MTOWER" CONTROL INSTRUMENT

Data Sheet

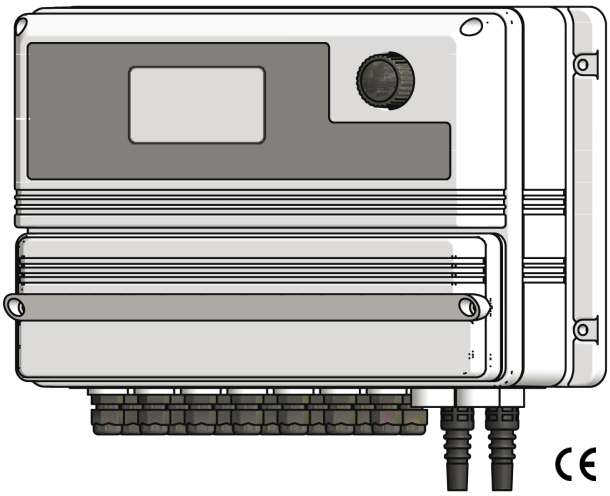

MTOWER is a fully featured cooling towers controller with two-way biocide options and inhibitor / bleed control. Wheel Control with easy setup interface.

Communication Ready.

FEATURES

- Large LCD backlight graphic display
- Wheel control with easy setup interface
- Bleed and Feeders live display
- Universal power supply
- Permanent data storage
- Multiple alarms control :
  - Hi & Low conductivity
  - Bleed timeout
  - Chemicals level
  - Flow

INPUTS

- Conductivity probe
- Temperature probe (compensated)
- Flow meter makeup
- Flow meter bleed
- 2 Biocide levels
- 2 Biocide activator levels
- Inhibitor level
- Flow sensor

OUTPUTS

- Bleed
- Inhibitor
- 2 Biocides
- 2 Biocides activators
- Alarm
- 0/20 or 4/20 mA Conductivity
- 0/20 or 4/20 mA Temperature
- Serial Port
- Inhibitor proportional

Via Donatori di Sangue, 1 - 02100 Rieti (Italy)
+39 074622841 | emecpumps.com

Specifications subject to change without notice | R2025

emec SIMPLE AS WATER

IQNET CERTIFIED MANAGEMENT SYSTEM

qualityaustria SYSTEM CERTIFIED
ISO 9001:2015 No.07728/0
ISO 14001:2015 No.00997/0
ISO 45001:2018 No.01121/0

"MTOWER" CONTROL INSTRUMENT

Data Sheet

ELECTRICAL

SIGNAL INPUT
Terminal block

POWER SUPPLY
UNIVERSAL 90÷265 VAC; 50/60 Hz

POWER CONSUMPTION
Average 20 W

THE WHEEL CONTROLLING SYSTEM

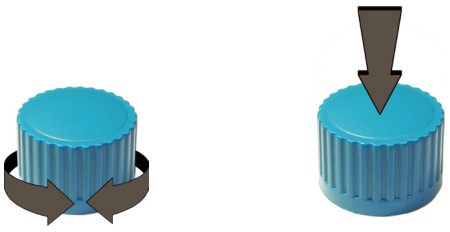

CONTROL PARAMETERS

Conductivity
Timer 1 (1 - 2 - 4 Weeks)
Timer 2 (1 -2 - 4 Weeks)

Inhibitor:
Feed and Bleed
Feed as a percentage of bleed
Feed as a percentage of time
Driven by pulse sender water meter
PPM setup with water meter

ENCLOSURE

IP65 enclosure (NEMA4x)
MTOWER control instruments are manufactured in ABS housing to ensure protection against aggressive chemicals and tough environment.

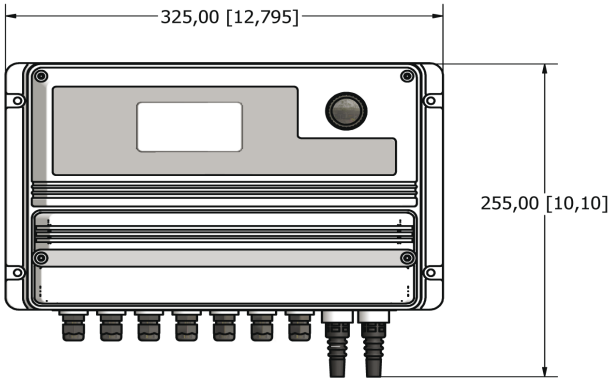

ENVIRONMENT

-10°C ÷ 50°C (14°F ÷ 122°F)
0÷95% (non condensing) relative humidity

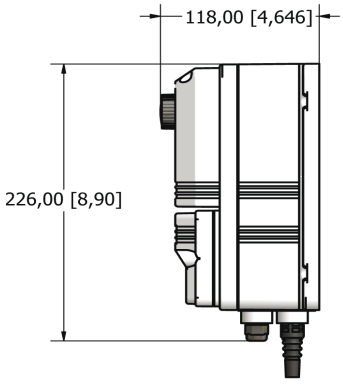

mm[inches]

Via Donatori di Sangue, 1 - 02100 Rieti (Italy)
+39 074622841 | emecpumps.com

Specifications subject to change without notice | R2025

emec SIMPLE AS WATER

IQNET CERTIFIED MANAGEMENT SYSTEM
qualityaustria SYSTEM CERTIFIED
ISO 9001:2015 No.07728/0
ISO 14001:2015 No.00997/0
ISO 45001:2018 No.01121/0