"LDOSIN" INSTRUMENT SERIES

Data Sheet

Reverse osmosis controller, microprocessor based. LCD display.
Readings: input and output conductivity; level control for collection tank, min and max pressure, membranes washing control,pressure pump heating control, softner stand-by.
Panel mounting instrument.

Rack mounting version available.

FEATURES

- OSMOSIS pump power supply output
- Dosing pump power supply output
- 3 electrovalves outputs (Input, Output, Bleed)
- 3 alarms outputs - free of voltage version (N.O. / N.C.)
- 2 levels inputs
- 2 HI/LOW pressure inputs
- Dosing alarm input
- Stand-by
- Filter input
- 2 conductivity probes inputs
- Password protected menu access

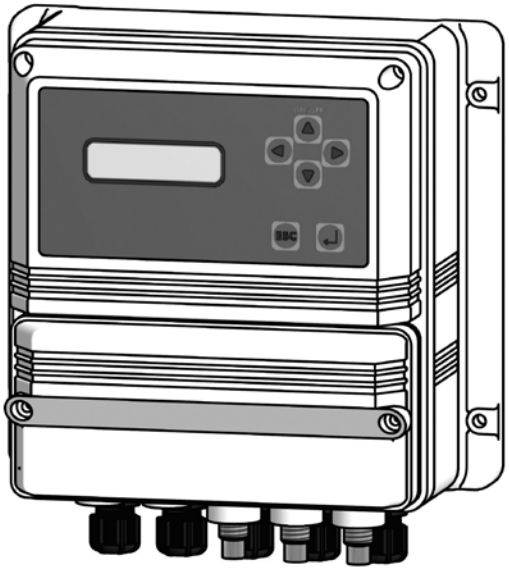

WORKING MODE: Production & Standby

The instruments controls and drives a reverse osmosis system.
It operates basing on collection tank levels.
In "low" level condition, the instrument starts water production: it opens the input solenoid valve, starts the pump and starts the pressure pump.
To avoid damages, a 3 sec. delay is given after the input solenoid valve opening.
When "high" level is reached, LDOSIN goes in stand-by mode: it stops the pump, the input solenoid valve and the pressure pump.
Water production and stand-by are controlled by levels: low for water production, high for stand-by.
It is possible to set low lovel (or high level) only or both. If both disabled, osmosis (water production) is always active.

Instrument's modes:
1) WATER PRODUCTION: all outputs active (solenoid valve 1, pump and pressure pump).
2) STAND-BY: all outputs disabled.
3) MEMBRANE WASHING - or M.W. - (to prevent deposits on membrane surface): if enabled in the main menu, a membrane washing can be done at instrument's power on, before/after water porduction and/or cyclically after a set number of hours.

"LDOSIN" INSTRUMENT SERIES

Data Sheet

DIMENSIONS

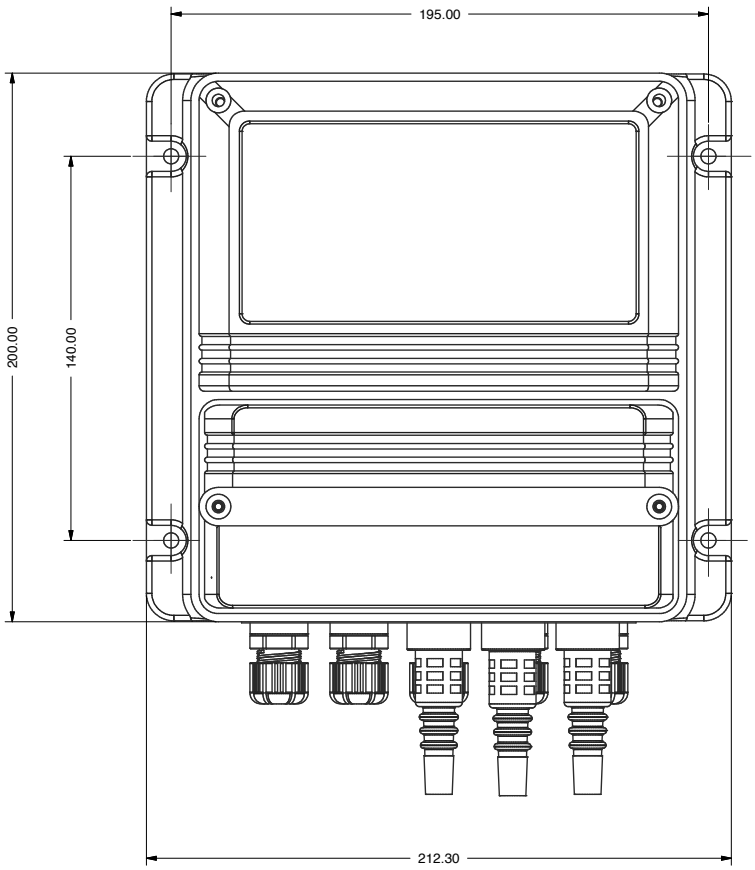

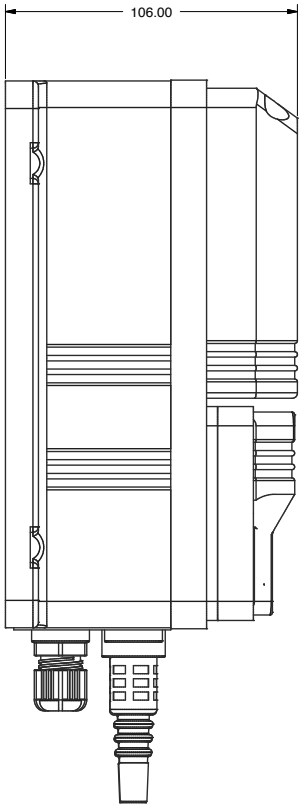

mm [inches]

HOUSING BOX

IP65 enclosure (NEMA4x)
LD OSIN control instruments are manufactured in ABS housing to ensure protection against aggressive chemicals and tough environment.

ENVIRONMENT
-10°C ÷ 50°C (14°F ÷ 122°F)
0÷95% (non condensing) relative humidity

PROBES

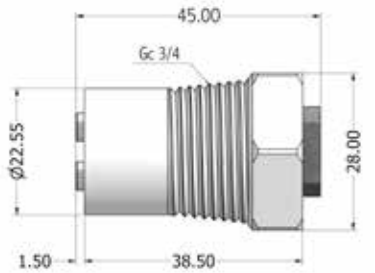

ECDI/1

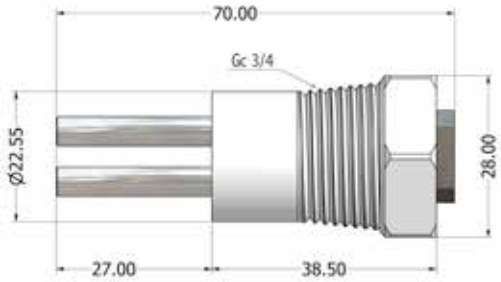

ECDI/01

CONDUCTIVITY WORKING RANGE

Version 1:
input water from 000 to 999 uS
output water from 00.0 to 99.9 uS
Version 1 use Inox K=1 input probe and Inox K=0.1 output probe.

Version 2:
input water from 00.0 to 9.99 mS
output water from 00.0 to 999 uS
Version 2 use graphite K=1 input and output probes.

Via Donatori di Sangue, 1 - 02100 Rieti (Italy)
+39 074622841 | emecpumps.com

Specifications subject to change without notice | R2025

emec SIMPLE AS WATER

IQNET CERTIFIED MANAGEMENT SYSTEM
qualityaustria SYSTEM CERTIFIED
ISO 9001:2015 No.07728/0
ISO 14001:2015 No.00997/0
ISO 45001:2018 No.01121/0

RACK VERSION DIMENSION
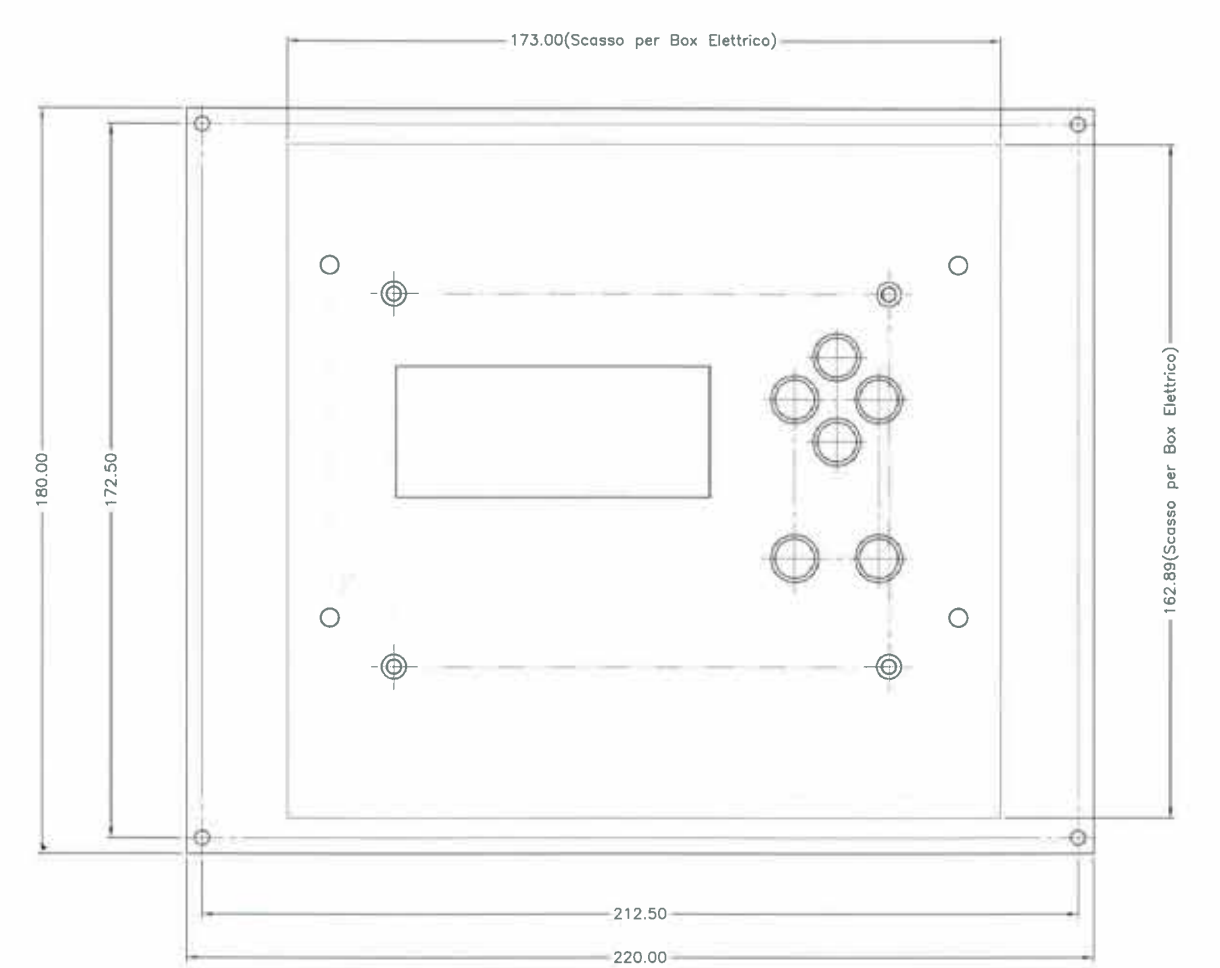
Depth 80,00 mm