"WNPHRH / WNPHCL / WNPHPS PER Stepper"

WN-STEPPER is a programmable controller equipped with two peristaltic dosing pumps with step-by-step movement for dosing acid (pH) and disinfectant (ORP), free chlorine (Cl) with temperature reading and free chlorine (potentiostat probe).

Suitable for installation in swimming pools, this instrument allows monitoring of essential water parameters.

On/Off, Proportional and Auto Dosing working modes based on setpoints value.

- Backlit LCD screen with large display capacity*
- "Encoder" knob for instrument control
- 2 dosing pumps with peristaltic stepper motors PC / TPV
- Input for external signal flow control
- pH scale: 0-14 pH
- Redox scale (WNPHRH model only): 0-999 mV
- Chlorine scale (WNPHCL model only): 0-10 mg/l Cl_2
- Chlorine probe (WNPHCL model only): ECL6; ECL12
- Potentiostat probe (WNPHPS model only): EPS
- Chlorine scale potentiostat probe (WNPHPS model only): 0-5 mg/l Cl_2
- Temperature Reading: 0-100°C
- AUTO DOSING working mode
- Pool Volume Setup
- Timered Outputs
- Alarms: maximum dosage, damaged probe, level, mains voltage, no flow
- Changeable Digital inputs logic mode (N.O. or N.C.)
- Delayed start of dosing (max 60 minutes)
- Setting of the priority of pH dosing compared to Redox
- Probe check-up
- pH compensation
- Permanent data storage with system log viewable on display
- Bluetooth LE / WiFi 2.4Ghz connection for APP "MY EMEC" and ERMES
- Upgradable firmware (via ERMES)
- SMS Alert messages (option on request)
- Ethernet connection for sending alert emails (option on request)
- Data log on USB device (option on request)
- Power supply: 100-240 VAC; 50/60 Hz

Inputs:

- Stand-by
- Flow
- pH level
- ORP level or Chlorine level
- pH probe
- ORP probe or Chlorine probe
- Temperature Probe
- Power supply

Outputs:

- pH pump output
- ORP or Chlorine pump output
- Alarm contact output

Display Color Status:

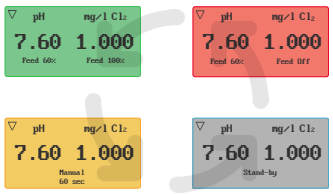

***Display background changes color based on the operating status:**

GREEN: Normal operation
YELLOW: Attention
RED: Alarm
WHITE: Standby

Via Donatori di Sangue, 1 - 02100 Rieti (Italy)
+39 074622841 | emecpumps.com

Specifications subject to change without notice | R2025

emec SIMPLE AS WATER

IQNET CERTIFIED MANAGEMENT SYSTEM
qualityaustria SYSTEM CERTIFIED
ISO 9001:2015 No.07728/0
ISO 14001:2015 No.00997/0
ISO 45001:2018 No.01121/0

“WNPHRH / WNPHCL / WNPHPS PER Stepper”

PERISTALTIC PERFORMANCE / Hose Ø4,8x1,6		
Pressure	**Flow Range**	**RPM Range**
bar (psi)	l/h (gal/h)	rpm
2 (29)	0,12-12 l/h | 0,0317-3,17 gal/h	1 - 100

PERISTALTIC PERFORMANCE / Hose Ø1,6x1,6		
Pressure	**Flow Range**	**RPM Range**
bar (psi)	l/h (gal/h)	rpm
2 (29)	0,018-1,8 l/h | 0,0047-0,47 gal/h	1 - 100

BUILDING MATERIALS	
PART	**MATERIAL**
Pump Head	PC / ABS
Cover	PC
Dust Cover Bushing	PEEK / PPS
Hose Stopper / Hose Holder / Hose Holder Vent	PVDF
Peristaltic Roller	POM DELRIN
Peristaltic Hose (Long-Life)	TPV

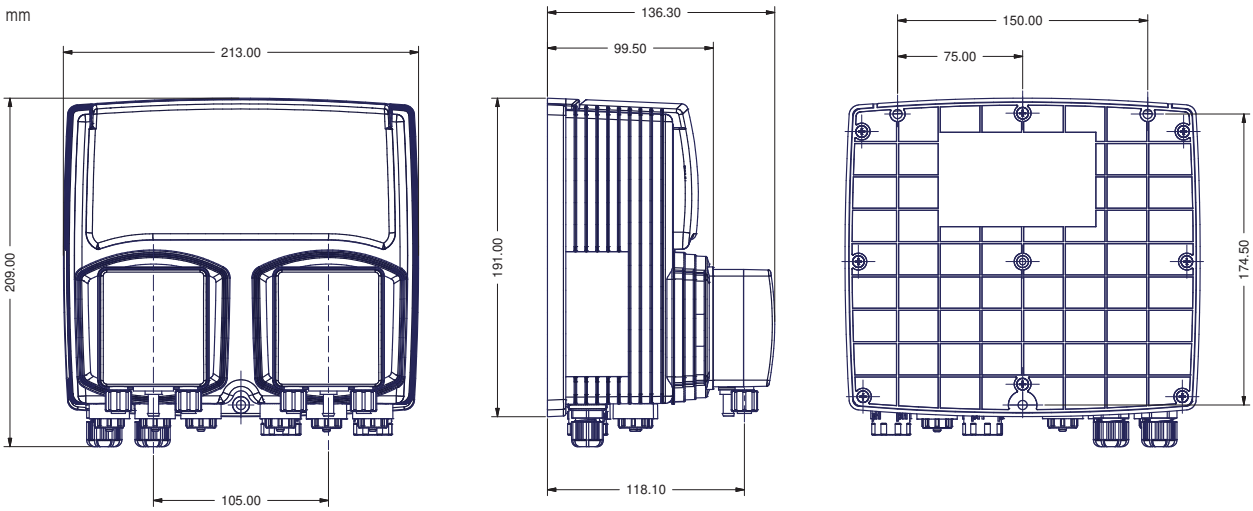

Via Donatori di Sangue, 1 - 02100 Rieti (Italy)
+39 074622841 | emecpumps.com

Specifications subject to change without notice | R2025

emec
SIMPLE AS WATER

IQNET CERTIFIED MANAGEMENT SYSTEM
qualityaustria SYSTEM CERTIFIED
ISO 9001:2015 No.07728/0
ISO 14001:2015 No.00997/0
ISO 45001:2018 No.01121/0