"T" series Metering Pumps

Data Sheet

"TA Self Venting"

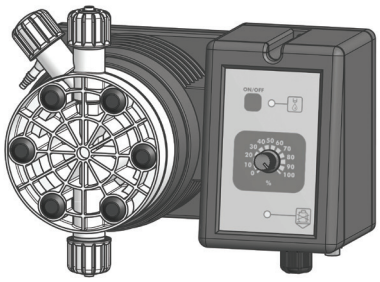

- Wall mounted
- Stroke speed adjustment
- Microprocessor technology
- Manual venting (T) or self venting (TA) PVDF pump head
- All liquid ends (pump head, injection valve, foot filte , delivery hose) are in PVDF

Power supply:	230 VAC (190-265 VAC) - 50/60 Hz 115 VAC (90-135 VAC) - 50/60 Hz 24 VAC (20-32 VAC) - 50/60 Hz 24 VDC (20-32 VDC) 12 VDC (10-16 VDC)
Pump Strokes	0-120
Environment Temperature:	0-45°C (32-113°F)
Chemical Temperature:	0-50°C (32-122°F)
Packaging and Transporting Temperature:	-10-50°C
Installation Class:	II Pollution Level: 2
Audible Noise:	62.0 db(A)
Protection Degree Rating:	IP 65 (% working RU: 85% T<=40°C; 70% T=50°C - without condensing water)
Max altitude:	2000 m

Configura ion code

MODELS			
Code T	**Cod. TA**	**MOD.**	**DESCRIPTION**
CO	**OA**	"CO"	Constant pump with stroke speed (frequency) adjustment.
CL	**CA**	"CL"	Constant pump with level control, stroke speed (frequency) adjustment.

CAPACITIES					
T Models			Delivey hose (PVDF)	Suction hose	Pump head mod.
2005	5 l/h at 20 bar	1.32 GPH at 290 PSI	4 x 6	4 x 6	L
0515	15 l/h at 5 bar	3.96 GPH at 73 PSI	6 x 8	6 x 8	N
0420	20 l/h at 4 bar	5.28 GPH at 58 PSI	6 x 8	6 x 8	N
0330	30 l/h at 3 bar	7.93 GPH a 44 PSI	8 x 10	8 x 12	S
0150	50 l/h at 1 bar	13.2 GPH a 15 PSI	8 x 10	8 x 12	S
00100	100 l/h at 0 bar	26.4 GPH at 0 PSI	12 x 18 PVC reinforced	12 x 18 PVC reinforced	T
TA Models			Delivey hose (PVDF)	Suction hose	Pump head mod.
203.2	3.2 l/h at 20 bar	0.85 GPH at 290 PSI	4 x 6	4 x 6	LA
0510	10 l/h at 5 bar	2.64 GPH at 73 PSI	6 x 8	6 x 8	NA
0413	13 l/h at 4 bar	3.43 GPH at 58 PSI	6 x 8	6 x 8	NA
0320	20 l/h at 3 bar	5.3 GPH at 43.5 PSI	8 x 10	8 x 12	SA
0135	35 l/h at 1 bar	9.2 GPH at 14.5 PSI	8 x 10	8 x 12	SA

Model T CO 2005 K 00 00

LIQUID ENDS								
	HEAD	**ORINGS**	**VALVE**		**DIAPHRAGM**	**HOSES**		**VISCOSITY**
			Body	Balls		Delivery	Suction	Max CPS
K	PVDF	FKM B	PVDF	Ceramic	PTFE	PVDF	PVC	100
P	PVDF	EPDM	PVDF	Ceramic	PTFE	PVDF	PVC	100
Y	PVDF	Nytrile	PVDF	Ceramic	PTFE	PVDF	PVC	100
V	PP	FKM B	PP	Ceramic	PTFE	PVDF	PVC	100
D	PP	EPDM	PP	Ceramic	PTFE	PVDF	PVC	100
W	PP	Nytrile	PP	Ceramic	PTFE	PVDF	PVC	100
J	PVDF	FKM B + PTFE	PVDF	Ceramic	PTFE	PVDF	PVC	100
A	Acrylic	FKM B	PVDF	Ceramic	PTFE	PVDF	PVC	100
Z	SS	FKM B	SS	SS	PTFE	N/A	N/A	100
$	Acrylic	FKM B	PP	SS + Hastelloy spring	PTFE	PE	PVC	8000 *

* Using high viscosity pump head mod. $, pump output may results lower in some applications.

POWER SUPPLY	
00	230 VAC Schuko plug
0S	230 VAC australian plug
01	230 VAC without plug
03	115 VAC US plug
04	24 VAC without plug
05	12 VDC *
07	24 VDC

* On some models only.

Via Donatori di Sangue, 1 - 02100 Rieti (Italy)
+39 074622841 | emecpumps.com

emec SIMPLE AS WATER

Specifications subject to change without notice | R2025

IQNET CERTIFIED MANAGEMENT SYSTEM
qualityaustria SYSTEM CERTIFIED
ISO 9001:2015 No.07728/0
ISO 14001:2015 No.00997/0
ISO 45001:2018 No.01121/0

"T" series Metering Pumps

Data Sheet

"TA Self Venting"

INFORMATION						
T	**Strokes speed**		**Power consumption at max flow (230 VAC)**	**Power consumption at max flow (115 VAC)**	**Power consumption at max flow (24 VAC/VDC)**	**Weight**
	min	max				
2005	12	120	27 Watt	21 Watt	n/a	5,7 Kg (12,6 Lbs)
0515	12	120	27 Watt	15 Watt	14 Watt	
0420	12	120	27 Watt	21 Watt	n/a	
0330	12	120	27 Watt	21 Watt	n/a	
0150	12	120	27 Watt	21 Watt	n/a	
00100	12	120	27 Watt	21 Watt	n/a	
TA	**Strokes speed**		**Power consumption at max flow (230 VAC)**	**Power consumption at max flow (115 VAC)**	**Power consumption at max flow (24 VAC/VDC)**	**Weight**
	min	max				
203,2	12	120	27 Watt	21 Watt	n/a	5,7 Kg (12,6 Lbs)
0510	12	120	27 Watt	15 Watt	14 Watt	
0413	12	120	27 Watt	21 Watt	n/a	
0320	12	120	27 Watt	21 Watt	n/a	
0135	12	120	27 Watt	21 Watt	n/a	

MORE INFORMATION							
T	**Flow**				**cc per Stroke**	**Max injection pressure**	
	min cc/h	max l/h	Min GPH	Max GPH	**Max**	**bar**	**PSI**
2005	500	5	0,13	1,32	0,7	20	290
0515	1500	15	0,39	3,96	2,1	5	73
0420	2000	20	0,52	5,28	2,8	4	58
0330	3000	30	0,79	7,93	4,2	3	43
0150	5000	50	1,32	13,2	7	1	15
00100	10000	100	2,64	26,4	14	0	0
TA	**Flow**				**cc per Stroke**	**Max injection pressure**	
	min cc/h	max l/h	Min GPH	Max GPH	**Max**	**bar**	**PSI**
203,2	96	3,2	0,025	0,85	0,44	20	290
0510	300	10	0,079	2,64	1,39	5	73
0413	390	13	0,103	3,43	1,80	4	58
0320	600	20	0,16	5,3	2,78	3	43,5
0135	1050	35	0,28	9,2	4,86	1	14,5

Via Donatori di Sangue, 1 - 02100 Rieti (Italy)
+39 074622841 | emecpumps.com

Specifications subject to change without notice | R2025

emec SIMPLE AS WATER

IQNET CERTIFIED MANAGEMENT SYSTEM
qualityaustria SYSTEM CERTIFIED
ISO 9001:2015 No.07728/0
ISO 14001:2015 No.00997/0
ISO 45001:2018 No.01121/0

"T" series Metering Pumps

Data Sheet

"TA Self Venting"

Measurement unit: mm

"S" - "T" PUMP HEAD

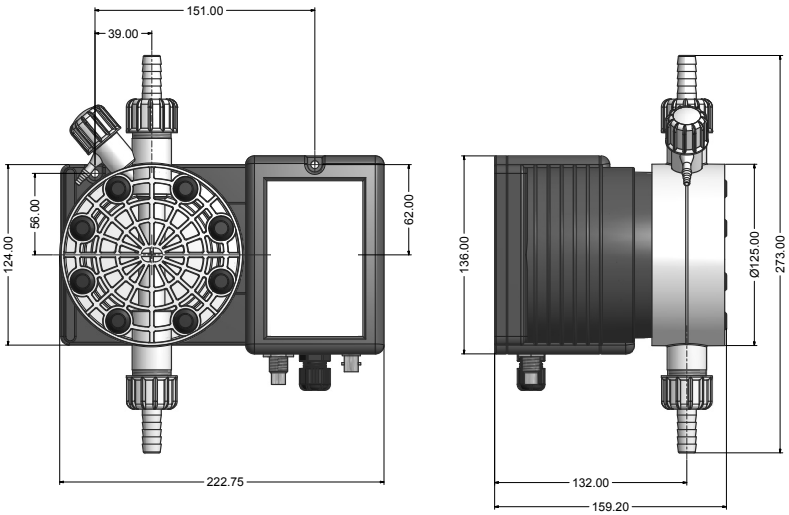

"N" - "P" PUMP HEAD

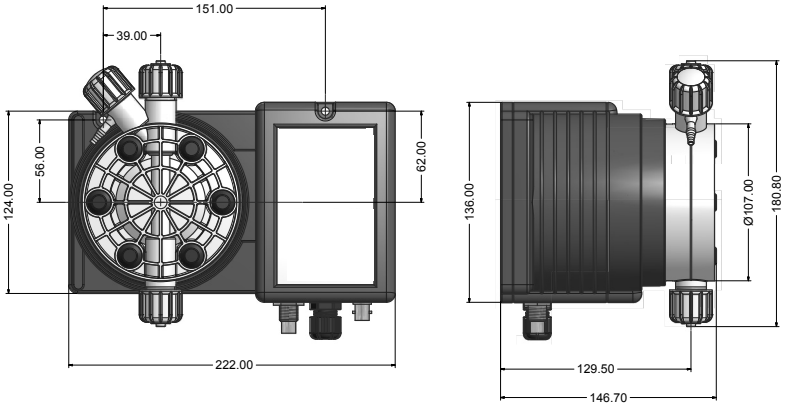

Via Donatori di Sangue, 1 - 02100 Rieti (Italy)
+39 074622841 | emecpumps.com

Specifications subject to change without notice | R2025

emec SIMPLE AS WATER

IQNET CERTIFIED MANAGEMENT SYSTEM

qualityaustria SYSTEM CERTIFIED

ISO 9001:2015 No.07728/0
ISO 14001:2015 No.00997/0
ISO 45001:2018 No.01121/0