ETRC2

EN

OPERATION MANUAL

ETRC2

PTSA PROBE

Contents

1. INTRODUCTION 3

2. UNPACKAGING THE INSTRUMENT 4

2.1. STANDARD ACCESSORIES 4
2.2. OPTIONAL ACCESSORIES 4

3. SPECIFICATION 4

4. INSTALLATION 5

4.1. QUICK 4-20MA START 6

5. PROBE CALIBRATION 7

6. COMMUNICATING USING MODBUS RTU 7

7. PROBE CLEANING AND MAINTENANCE 8

7.1. DETERMINING THE NEED TO CLEAN 8
7.2. METHODS TO CLEAN THE ETRC2 PROBE 9

7.3. OTHER COMMON TROUBLESHOOTING ISSUES 10
7.4 STORAGE 10

1. Introduction

The ETRC2 inline fluorometer probe measures the concentration of a fluorescent tracer, PTSA (pyrenetetrasulfonic acid), in water. The fluidic and optical arrangement of the ETRC2 probe is designed to overcome many shortcomings associated with other fluorometers. It can be easily inserted into the custom-made tee with a compression fitting port designed to ensure correct positioning of the ETRC2 probe in the fluid stream. the ETRC2 probe custom mounting tee has two ¾ inch female NPT ports for plumbing into an existing ¾ inch sample water line. The ETRC2 probe can be connected to any device that accepts an isolated or non-isolated 4-20mA input. In addition to measuring fluorescence, the ETRC2 probe has extra photo-electric components that monitor the color and turbidity of the sample water. This extra feature allows the ETRC2 probe to automatically compensate for color and turbidity to eliminate interferences common in real-world samples. The ETRC2 probe has a short fluidic channel that can be easily cleaned. The ETRC2 probe uses a narrow wavelength band gallium phosphide photodiode, integrated with a high temperature tolerant and high humidity resistant optical filter. This combination greatly enhances the robustness of the ETRC2 probe. It can be operated under a wide range of ambient conditions without the need of humidity and temperature regulation. The performance of the ETRC2 probe is designed to be stable and consistent for a long period time.

Other features of the ETRC2 probe include:

- Any standard containing PTSA in the range of 20 to 200 ppb can be used for the calibration. The standard can be the water sample itself when the PTSA concentration of the sample has been measured by another fluorometer that has been calibrated. This allows the ETRC2 probe to be calibrated without being removed from the system.
- Automatic compensation:
  - turbidity changes up to 150 NTU
  - color changes equivalent to 10 ppm humic acid or 10 ppm iron
- The probe can compensate the measure with turbidity and colour changes of the water
- The ETRC2 probe can be easily removed from the custom tee for cleaning without the need for any tools.

2. Unpackaging the Instrument

Remove the instrument and accessories from the shipping container and inspect each item for any damage that may have occurred during shipping. Verify that all accessory items are included. If any item is missing or damaged, please contact reseller.

3. Specification

- Power Supply Required: 24 (±2) VDC @ 65 mA
- Signal Output: 4-20 mA and RS-485 Modbus RTU
- Temperature, Sample Water: 40 – 104 °F (4 – 40 °C)
- Temperature, Ambient during operation: 40 – 120 °F (4 – 49 °C)
- Temperature, Ambient during storage: 20 – 140 °F(-7 – 60 °C)
- Sample Pressure: 100 PSI
- Cable Length: 5 feet, terminated with IP67 connectors
- Water proof connector
- Dimension: Length 6.8 inch (172.7 mm), body diameter 1.44 inch (36.6 mm)
- Weight: 0.37 pounds (170 grams)
- PTSA Measuring Range: 0 to 300 ppb (3σ error: ±1 ppb or 5% of reading, whichever is greater)
- Regulatory: CE Marked

4. Installation

It is recommended to install the ETRC2 probe tee in the pipe system where sample water flow is upwards. Place the O-ring on the ETRC2 probe. Insert the ETRC2 probe into the tee. Make sure that the fluidic channel in the ETRC2 probe is aligned with the sample flow direction.

WARNING

Do not over tighten the compression nuts and/or the threaded pipe when connecting the tee to the sample line.

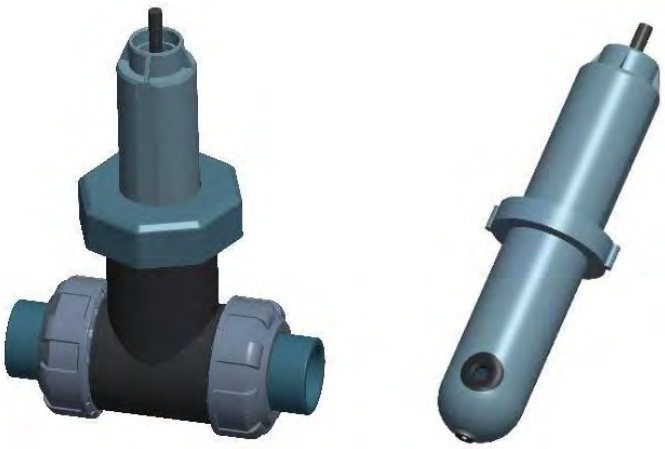

Fig 1. ETRC2 with Tee Set

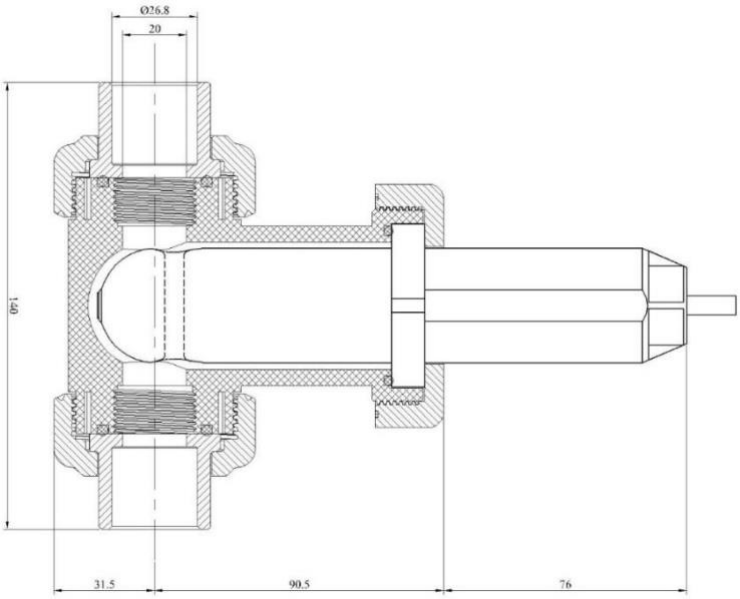

Fig 2. ETRC2 Dimensions

4.1. Quick 4-20mA Start

Note: The negative 24V power terminal and the negative 4-20 mA terminal on the ETRC2 probe are internally connected.

If the negative 24V power terminal and the negative 4-20 mA terminal in the controller are internally connected (non-isolated 4-20mA input), it is unnecessary to connect the 4-20 mA negative wire (blue) to the 4-20 mA negative terminal in the controller. If a separate DC power supplier other than that from the controller is used, make sure that the output from the power supply is rated for 22-26 VDC @ 65mA.

Follow the wiring table below to connect the ETRC2 probe to a controller.

Wire Color	Designation
Red	24 V +
Black	24 V -
White	4-20 mA +
Green	4-20 mA -, internally connected to 24 V – (power ground)
Blue	RS-485 A
Yellow	RS-485 B
Clear	Shield, solution ground

ETRC2 MODULE

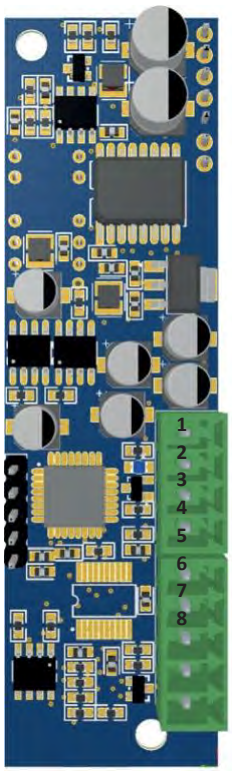

ETRC2 Probe Connection:

1) from external PT100 probe Yellow wire (ETRC2 probe only)
2) from external PT100 probe: White wire (ETRC2 probe only)
3) from external PT100 probe: Brown wire (ETRC2 probe only)
4) from external PT100 probe: Green wire (ETRC2 probe only)
5) Red Wire 24 (+ VDC)
6) Black or Brown wire 24 (-VDC)
7) n / a
8) Yellow wire RS-485 B
9) 9) Blue RS-485 wir A

5.2.5. 4-20 mA Output Setup

The default setting for 20 mA is 200 ppb and 4 mA for 0 ppb PTSA.

Example: If the 20mA value is reset to 100 ppb, the ETRC2 probe will output 20 mA at 100 ppb, 12 mA at 50 ppb, and 4 mA at 0 ppb.

5.3. Calibration on the Controller

With the default probe settings, the controller should be set up to convert 4 mA to 0 ppb and 20 mA to 200 ppb. Additionally, the ETRC2 probe can be calibrated by changing the conversion factor on the controller without performing the zero point and slope calibration steps. The controller can be configured to show the PTSA concentration without the need to calibrate the ETRC2 probe using a standard solution. Determine the PTSA ppb concentration in the water sample by using the SP-350 (or similar offline fluorometer) or calculated from the concentration of any measurable species in the sample water such as polymer, phosphate, or molybdate.

Example: If the ETRC2 probe outputs 10 mA (Y) in a 120 ppb (X) standard solution, calculate this value (z) according to: z = (X ppb * 20 mA) / (Y mA – 4mA)

$$z = (120 \text{ ppb} \times 20 \text{ mA})/(10 \text{ mA} - 4 \text{ mA}) = 400 \text{ ppb}$$

Fill in the z value 400 for 20 mA output in the controller's mA-to-value configuration setup. This will force the *controller* to show 120 ppb when the ETRC2 probe is immersed in a 120 ppb solution.

6. Communicating using Modbus RTU

The ETRC2 probe is configured as a Modbus slave device. In addition to the ppb PTSA value, many operational parameters, including warning and error messages, are available via a Modbus RTU connection.

7. Probe Cleaning and Maintenance

The ETRC2 probe is designed to provide reliable and continuous PTSA readings even when installed in moderately contaminated industrial cooling waters. Although the optics are

compensated for the effects of moderate fouling, heavy fouling will prevent the light from reaching the sensor, resulting in low readings and the potential for product overfeed if the ETRC2 is used as part of an automated control system. When used to control product dosing, it is suggested that the automation system be configured to provide backup to limit potential product overfeeds, for example by limiting pump size or duration, or by alarming if the pumping rate exceeds a desired maximum limit.

The ETRC2 probe is designed to be easily removed, inspected, and cleaned if required. It is suggested that the ETRC2 probe be checked for fouling and cleaned on a monthly basis. Heavily contaminated waters may require more frequent cleanings. Cleaner water sources with less contamination may not require cleaning for several months.

7.1. Determining the Need to Clean

The need to clean the ETRC2 probe can be determined by visual inspection. Remove the ETRC2 from its custom mounting tee. When the ETRC2 probe is powered, a flashing blue light should be visible inside the ETRC2 probe's quartz measuring tube. If a flashing blue light is not visible, the ETRC2 probe should be cleaned.

After performing the visual inspection, remove any visible deposits with a soft cloth. Place the ETRC2 probe in a small beaker containing a calibration solution. The readout device should indicate the calibration solution concentration, or the product concentration equivalent to that PTSA concentration. If the readout is not within 10% of the expected value, the ETRC2 probe should be cleaned using the methods below prior to recalibration.

7.2. Methods to Clean the ETRC2 Probe

Any equipment in contact with industrial cooling systems is subject to many potential foulants and contaminants. There is no universal cleaner for all possible deposits. The three mild chemical cleaning solutions below have been shown to remove most common foulants and contaminants. A small soft bristle brush, Q-Tips® cotton swab, or soft cloth may be used to safely clean the probe housing and the quartz optical sensor channel.

WARNING

Do not use an organic solvents or strong acid or base to clean the ETRC2 probe.
Do not use abrasive cleaners of any kind.

7.2.1. Iron or Manganese or other inorganic Deposits

Soak the lower half of the ETRC2 probe in 100 ml CLR Rust Remover for 30 minutes. Rinse the ETRC2 probe with distilled water and then check for the flashing blue light inside the ETRC2 probe quartz tube. If the surface is not entirely clean, continue to soak the ETRC2 probe for an additional 30 minutes. CLR Rust Remover may be purchased at consumer product stores including Walmart and Home Depot.

7.2.2. Light Rust, Oil, Biofilm, and Other Light Deposits

Use a cotton swab soaked with the 91% isopropanol (also known as isopropyl alcohol, available from pharmaceutical stores such as following.

Swab the inner surface of the ETRC2 probe quartz tube in a circular motion several times. Rinse the ETRC2 probe with distilled water and check for flashing blue light indication inside the ETRC2 probe quartz tube. If surface is not entirely clean, continue to soak the ETRC2 probe for an additional 30 minutes.

7.3. Other Common Troubleshooting Issues

If the ETRC2 probe output signal is not stable and fluctuates significantly, make an additional solution ground connection – connect the clear solution ground wire to a conductor that contacts the sample water electrically such as a brass pipe adjacent to the ETRC2 tee.

Carry out routine calibration check against a PTSA standard. If necessary, carry out the zero point and slope calibration.

7.4 Storage

Avoid long term storage at temperature over 100 °F / 38°C. In an outdoor installation, properly shield the ETRC2 probe from direct sunlight and precipitation.

PRECAUTIONS RELATING TO DIRECTIVES, REGULATIONS AND STANDARDS

§ CE/EU and UKCA marking

We guarantee that this product meets the essential requirements of the applicable Directives and Regulations based on the following specifications. Please carefully consider the following specifications for use of the product in European Union member countries and the United Kingdom.

• CE/EU harmonized directives and standards

Directives

DIRECTIVE 2014/30/EU
DIRECTIVE 2011/65/EU
DELEGATED DIRECTIVE (EU) 2015/863

Harmonized standards

EN ISO 12100
EN IEC 61326-1
EN IEC 63000

• UKCA harmonized regulations and standards

Regulations

2008 2016 No. 1091
2012 No. 3032

Harmonized standards

BS EN ISO 12100
BS EN IEC 61326-1
BS EN IEC 63000

Disposal of end-of-life equipment by users

This symbol warns you not to dispose of the product with normal waste. Respect human health and the environment by giving the discarded equipment to a designated collection center for the recycling of electronic and electrical equipment. For more information visit the online site.

When dismantling a pump please separate material types and send them according to local recycling disposal requirements. We appreciate your efforts in supporting your local Recycle Environmental Program. Working together we'll form an active union to assure the world's invaluable resources are conserved.