emec®
SIMPLE AS WATER

POOL CATALOGUE

SOLUTIONS FOR WATER TREATMENT

emec®

SIMPLE AS WATER

WATER TREATMENT SYSTEMS

EMEC

SYSTEMS FOR SWIMMING POOLS

Flexibility and innovation

Flexibility and innovation are fundamental to us.
Since 1982, we have been designing and producing reliable, cutting-edge instruments for water treatment and chemicals dosing. As a company, we are open to change and, just like water, we have branched out over time, spreading out into wide-ranging areas, from industrial water treatment to potabilization to water purification, from food and beverage industry to swimming pools.

OUR VALUE
Being at the cutting edge means constant study. Our R&D and design departments are where our heart beats. Extremely high-profile engineers and technicians are committed to developing software and designing hardware, but also to studying and evaluating hydraulic and mechanical components.
The customers and their satisfaction have always been at the heart of what we do, so we pay constant attention to the quality of our production processes, through a constantly updated and cutting-edge range of industrial machines.

QUALITY AND SAFETY, FIRST OF ALL
We are entirely responsible for every stage of the process, from invention to delivery. Our products undergo up to 10 quality checks and are tested four times before reaching the customer. The quality management system of our production process is ISO 9001 certified and has customer satisfaction as its ultimate goal, as well as continuous improvement of company performance.
Customers satisfaction comes hand-in-hand with ensuring safety for them, their operators and final users. Our dosing pumps and controllers are UL certified to guarantee full compliance with general requirements for safety of use, while ***NSF*** certifications guarantee that our pumps do not release hazardous pollutants into the water and therefore are fully safe for use in contact with drinking water, for example in the food production industry, or at recreational facilities like swimming pools and spas.

COMPETENCE AND PROFESSIONALISM
Extremely high performance, top quality and high technology are our greatest assets. But there is more. Every day, we safeguard something equally important: human capital. Our co-workers are the best professionals on the market; the most expert and competent people.
For this reason our organizational model is designed to manage their safety and health in an organic and systematic way, respecting the international standard ***BS OHSAS 18001***.

ENVIRONMENTAL SUSTAINABILITY
The adoption of an environmental management system compliant with the international standard ***ISO 14001*** arises from the awareness of the imprint that human activities leave on the planet. Our environmental protection management system allows us to minimize the impact of production processes (with emissions well below the prescribed limits), of products and of raw materials used (with the recycling of most of the waste materials), also thanks to an energy saving system that covers all company spaces and to the use of renewable energy sources.

MADE IN ITALY

100% MADE IN ITALY
All our products are 100% Made in Italy.

5 YEARS WARRANTY

WARRANTY
5 years warranty for our dosing pumps and controllrers.

CERTIFIED IQNet MANAGEMENT SYSTEM

NSF
Certified to NSF/ANSI/CAN 50

c UL us

qualityaustria SYSTEM CERTIFIED
ISO 9001:2015 No.20006/0
ISO 14001:2015 No.03528/0
BS OHSAS 18001:2007 No.02032/0

POOL CATALOGUE

Smart systems

POOLBRAVO 8

Dosing pumps

STEPPER PERISTALTIC DOSING PUMPS

WNPHXX Series 10
VELON Series 14
Prisma 16

ELECTROMAGNETIC DOSING PUMPS

WDPHXX Series 18

MULTI-FUNCTION DOSING PUMPS

AMS FM Series 28
KMS FM Series 29
TMS FM Series 30
VMS FM Series 32

CONSTANT DOSING PUMPS

AMS CL PLUS Series 35
K CL PLUS Series 36
T CL Series 37
V CL Series 38
VCLD Series 40

PROPORTIONAL DOSING PUMPS WITH MEASUREMENT

TMS ph and Rh Series 43
VMS PO e H_2O_2 Series 44

Digital controllers

MULTIPARAMETER DIGITAL CONTROLLERS

CENTURIO POOL 46

LDPHXX Series 48

SINGLE MULTIPARAMETER DIGITAL CONTROLLERS

LDS 50

JA PRO 52

MODEM AND EXTERNAL MODULES FOR COMMUNICATION

Connection Example 54

All-in-one control and dosing solutions

ALL-IN-ONE SYSTEMS 58

ALL-IN-ONE SYSTEMS
Digital system with open amperometric cell ECL6 62

ALL-IN-ONE SYSTEMS
Digital system with closed amperometric cell SCL3S/20 and PEF1 64

ADVANCED ALL-IN-ONE SYSTEMS 66

Accessories

LIST OF COMPATIBLE ACCESSORIES 69

Remote measurement and control

MINBUS 74

MY EMEC 78

SWIMMING POOL MADE SMART

POOLBRAVO

POOLBRAVO

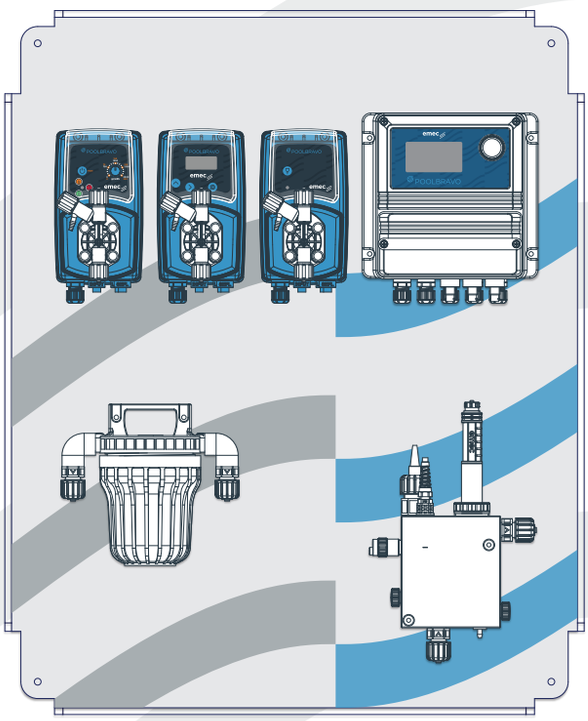

A multi-colored LED light is installed on PEF probe-holder in order to quickly signal, through an opening on the cover, specific operation statuses or possible alarms according to the color of the light.

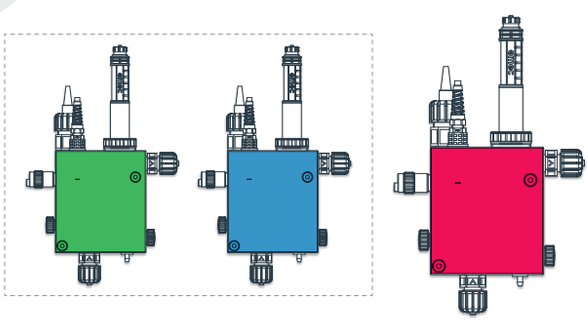

GREEN *or* ***BLUE*** *(depending on the version) means the device is correctly functioning.*

RED *means the device is in an alarm status.*

The POOLBRAVO integrated system has been designed to offer an all-in-one solution that is easy to use and highly accurate, able to minimize the need for manual intervention on swimming pool water and to reduce the consumption of chemical products. An elegant cover makes POOL BRAVO suitable for any installation context and, besides safeguarding from accidental liquid loss, preserves at the same time the cleanliness of the inner components and their integrity.

POOLBRAVO is a turnkey product available in different configurations to immediately and easily manage the main measurement parameters concerning the treatment of swimming pool water, thus optimizing the dosing and consumption of the chemical products necessary for the compliance with chemical-physical water requirements.

COMPLETE CONTROL

The LD multiple reading digital system inside POOLBRAVO gives you the complete control over the measurement parameters and over the dosing of chemicals, besides being easy to use thanks to the LCD display and the ENCODER control knob that makes simple to browse through its configuration menus. Complete control also comes from the wide range of probes that can measures hydrogen peroxide, oxygen, bromine, chlorine, ozone, peracetic acid and chlorine dioxide. EMEC V series dosing pumps complete POOL BRAVO dosing system.

REMOTE CONTROL

EMEC exclusive online system ERMES enables you to remotely control and regulate POOLBRAVO from any smartphone or PC, so to keep the status of your swimming pool always under control, wherever you are.

STEPPER PERISTALTIC DOSING PUMPS

WNPHXX:PRECISE, RELIABLE, SILENT.

WN

WNPHXX

WNPHxx Standard Pump

The **WNPHxx** series has been developed by EMEC to offer a complete and user-friendly solution for swimming pool water treatment and for all those installations where precise, reliable and silent operation is needed, such as in wellness and spa environments.

The **WNPHxx** series products are two-channel and multi-parameter
with a temperature readout.

Distinctive features also include:
- optimised dosing capacity as result of its electronically controlled stepper motor. This allows the rotation speed to be varied in real time and therefore also the dosage, in a range of from 1% to 100%;
- ability to detect and manage electromechanical faults.

The large backlit LCD screen and encoder knob makes data clearly visible and the menus easy to navigate so that operating modes can be quickly programmed with the relative alarm settings and different outputs. The **WNPHxx** can also be remote controlled using the NIMBUS platform and the My Emec app.

The **WNPHxx** series is the compact all-in-one solution for maximum precision that also includes a control instrument and two peristaltic stepper dosing pumps in one product.

Stepper metering pumps

WNPHxx Series

WNPHxx

PERFORMANCE

TUBO BIOCOMPATIBILE A LUNGA DURATA

Hose	Pressure		Capacity range		RPM range
	bar	*PSI*	*l/hr*	*gal/hr*	*rpm*
Ø 1.6x1.6	**2**	**36.2**	**0.018 - 1.8**	**0.0047 - 0.47**	**1 - 100**
Ø 4.8x1.6	**2**	**36.2**	**0.12 - 12**	**0.0317 - 3.17**	**1 - 100**

PERFORMANCE

- No. 2 high-precision stepper motors
- Precision through peristaltic dosing
- Great flexibility of use (1 m3 - 250 m3)
- Low maintenance requirements (longlasting biocompatibile peristaltic tube)
- Scheduled maintenance alerts
- Advanced operator safety (inverters and low-permeability materials)
- New automatic dosage adjustment system
- Built-in Wi-Fi connectivity
- Remote control via NIMBUS/ My EMEC App

BASIC MODEL ACCESSORIES

- 2 PVDF injection valves (0.3 bar)
- 2 PVDF level probes
- 2 PVDF foot strainers
- 8 meters of suction hose (flexible PVC)
- 2 long-lasting biocompatible tubes 4.8x1.6 (standard equipment)

VELON Series

Peristaltic dosing pumps with stepper motor

VELON

WIFI

NIMBUS
DIGITAL SERVICES

APP **MY EMEC**

ONLINE STATS

CUSTOMIZABLE

MAX FLOW RATE

12 **l/h**

MAX PRESSURE

2 **bar**

POWER SUPPLY

12 | 24 **VDC**

24 **VAC**

100-240 **VAC**

VELON is a state-of-the-art compact peristaltic dosing pump, equipped with a high-precision, electronically-controlled multifunction stepper motor that guarantees constant and regular chemical product dosing, even in demanding working conditions and with load variations. Designed to offer a complete, easy-to-use solution in all installation contexts that require precise, reliable, quiet and safe operation.

ACCESSORIES

- 1 PVDF injection valve (0.3 bar)
- 1 PVDF foot filter with level probe
- 4 m suction tubing (flexible PVC)
- 1 long-life biocompatible tubing, 4.8 × 1.6 mm (standard supply)
- 1 long-life biocompatible tubing, 1.6 × 1.6 mm (included accessory)

FEATURES COMMON TO THE ENTIRE SERIES

Microprocessor	Pressure (bar - psi)	RPM Range (rpm)	Protection	Power Supply	installation Class
Next-Generation, High-Performance	2 (29)	da 1 a 100	IP65	24 | 100–240 VAC, 12VDC, 24VDC	II

Flow Rate Range (l/h – gal/h) (Ø1,6x1,6)	Flow Rate Range (l/h – gal/h) (Ø4,8x1,6)	Operating Temperature	Additive Temperature	Manufacturing Materials	Remote Control
0,018 – 1,8 l/h 0,0047 – 0,47 gal/h	0,12 – 12 l/h 0,0317 – 3,17 gal/h	10 – 45 °C 55 – 113 °F	0 – 50 °C 32 – 122 °F	PC/ABS, PVDF, POM, TPV	Web (NIMBUS) e App (MyEmec)

AVAILABLE VERSIONS

DIGITAL

ANALOGIC

VELON MF

VELON PO

VELON PM

VELON CL

SPECIFIC MODEL FEATURES

	Velon MF	Velon PO	Velon CL	Velon PM
DESCRIPTION	Multifunction pump with extensive dosing modes and digital management, including remote control	Versatile pump with proportional adjustment and remote control	Essential, practical pump for constant dosing with manual adjustment via potentiometer	Pump with MODBUS RTU integration, ideal for automated systems
INTER./CONT.	Backlit RGB LCD display, encoder, remote management via app/web	Backlit LCD display, encoder, remote management via app/web	Front potentiometer, LED, ON/OFF button	MODBUS RTU, LED, tasto ON/OFF
WORKING MODE	Constant, CC/Pulse, PPM, %, MLQ, Batch, Volt, mA, Pulse, Weekly Program, Ext Constant	Proportional, Autodosing pH and/or Redox	Constant	External Control
MAINTENANCE	Scheduled maintenance via activity meters	Scheduled maintenance via activity meters	Scheduled maintenance via activity meters	Scheduled maintenance via activity meters
INPUT	MODBUS RTU, Multi-function, Level	MODBUS RTU, Standby, Level, Serial Probe	Level	MODBUS RTU, Level
OUTPUT	Alarm (optional)	Allarm (optional)	Allarm (optional)	Allarm (optional)
CONNECTIVITY	Wi-Fi & Bluetooth	Wi-Fi & Bluetooth	-	-
FW UPDATE	OTA	OTA	-	-

PRISMA Series

Stepper motor dosing pumps

PRISMA

APP **MY EMEC**

NIMBUS

DIGITAL SERVICES

MAX FLOW RATE

80 **l/h**

MAX PRESSURE

25 **bar**

POWER SUPPLY

12-24 **VDC**

24 **VAC**

100-240 **VAC**

VENTING

Manual

FEATURES

- Pump head available in PVDF, PP, SS and PMMA
- Accessories available in PVDF and PP
- Stepper motor
- Multifunctional software
- High-strength PTFE diaphragm
- Horizontal mounting
- RGB backlit LCD display

STEPPER MOTOR

SLOW MODE | TURNDOWN RATIO 1:4800 | MULTI-COLOUR DISPLAY | MULTIFUNCTION

WORKING MODES

CONSTANT | MODBUS | NIMBUS | CONSTANT WITH EXTERNAL INPUT | PPM | % | mA | PAUSE-WORK | WEEKLY TIMER | MLQ | CC/PULSE | VOLT | BATCH EXTERNAL/MANUAL

PUMP HEADS

PVDF

PP

SS AISI316L

PMMA

ACCESSORIES

Foot filter with level probe

Injection valve 1/2" or 3/4"

PRISMA stepper motor-driven dosing pump has been designed by EMEC to be the best solution for offering high-accuracy metering and extreme reliability.

Thanks to the new stepper motor and to the Multifunction software, **PRISMA** dosing pumps offer complete control over dosing speeds and working modes as well as great flexibility, meeting even extremely complex application needs.

INFO COLOR SCREEN

REAL-TIME FLOW

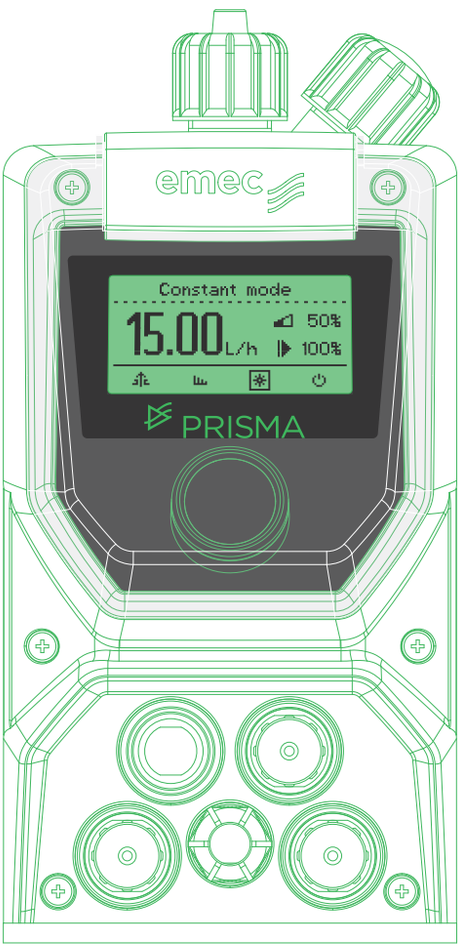

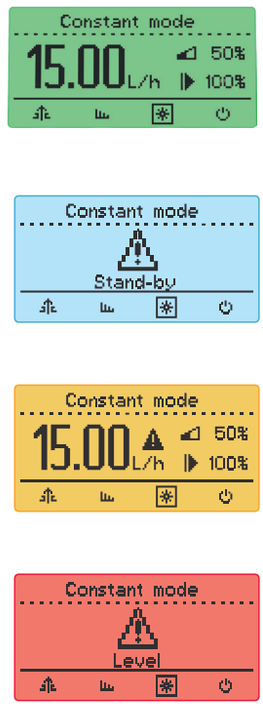

DOSING
Green

STAND-BY
White

WARNING
Yellow

ALARM
Red

PRISMA dosing pumps feature the Encoder control knob for quickly browsing through the menus and a large display to easily regulate and control the working parameters.

By changing background colors the backlight display can also signal different working status.

TURNDOWN

PRISMA stepper motor-driven pumps give you the most accurate control over the stroke speed, providing an outstanding turndown ratio of up to **4800:1**.

It means **PRISMA** can split up the dosing process into a maximum of **4800 steps** in order to offer the most homogeneous and precise distribution of the product to dose according to the required application.

SLOW MODE

Extreme versatility of **PRISMA** dosing pumps is also due to **Slow Mode** function.

With Slow Mode enabled you can reduce the suction speed from **100** to **30%** of the normal speed, making easier and more reliable the priming and the dosing even when you have to work with particularly viscous liquids.

ELECTROMAGNETIC DOSING PUMPS

WD: PRECISE, RELIABLE, NOISELESS

WD

WDPHXX

WDPHxx series has been created by EMEC to provide a complete and small-sized solution for swimming pool water treatment. WDPHXX systems are all-in-one, compact instruments which integrate two dosing pumps and a control instrument into a single, easy to use, highly precise system.
WDPHXX systems can measure pH and another parameter that depends on the chosen model: chlorine, bromine, Redox, antialgae, flocculant, active oxygen. A wide range of products for the highest flexibility.

COMPLETE CONTROL, EVEN REMOTELY

A clear reading of data and an easy browsing through function menus are made simple by a wide backlit LCD display and by the “Encoder” control knob, in order to quickly program the working modes you need, to set alarms and to manage outputs.
You can also remotely control WDPHXX systems from any smartphone or PC with EMEC exclusive online system NIMBUS, so to keep the status of your plant always under control wherever you are.

All-in-one dosing pumps

Multiparameter measurement and control

WDPHCL

pH & Chlorine

WDPHCL / WDPHCL PER
Swimming pool controller with 2 dosing pumps for acid (pH) and chlorine (Cl2). Liquid ends and pump head made of PVDF.

Wheel control system

Alarm output
RS485 output

Measurement range:
from 0 to 14 pH
from 0 to 10 mg/l Cl_2

PRESSURE		FLOW	
7	**bar**	6	**l/h**
5	**bar**	1	**l/h**
3	**bar**	10	**l/h**

WDPHRH

pH & ORP

WDPHRH
Swimming pool controller, 2 dosing pumps for acid (pH) and disinfectant (ORP).
Liquid ends and pump head made of PVDF.

Wheel control system

Alarm output
RS485 output

Measurement range:
from 0 to 14 pH
from 0 to 1000 mV

PRESSURE		FLOW	
7	**bar**	6	**l/h**
5	**bar**	1	**l/h**
3	**bar**	10	**l/h**

All-in-one dosing pumps

Multiparameter measurement and control

WDPHCLS

pH and Chlorine/Bromine

WDPHCLS
Proportional controller with 1 dosing pump driven by internal built-in pH and Chlorine/Bromine meter. Output: (SCHUKO plug) for sterilisers or Cl/Br feeders. Liquid ends and pump head made of PVDF.

Measurement range:
from 0 to 14 pH
from 0 to 10 mg/l Cl_2 / Br_2

Option: free of voltage EV contact.

PRESSURE		FLOW	
7	bar	6	l/h
5	bar	1	l/h
3	bar	10	l/h

EV OUTPUT		MAX LOAD	
230	VAC	10	A

WDPHRHS

pH and ORP

WDPHRHS
Proportional controller with 1 dosing pump driven by internal built-in pH and ORP meter.
Output: (SCHUKO plug) for sterilisers or Cl/Br feeders. Liquid ends and pump head made of PVDF.

Measurement range:
from 0 to 14 pH
from 0 to 1000 mV

Option: free of voltage EV contact.

PRESSURE	FLOW
7 bar	6 l/h
5 bar	1 l/h
3 bar	10 l/h

EV OUTPUT	MAX LOAD
230 VAC	10 A

All-in-one dosing pumps

Dry feeder and salt chlorine generator measurement and control
Bromine, pH and active oxygen measurement and control

WDPHCA

WDPHCA
Proportional controller with 2 dosing pumps for pH and anti algae. 230VAC EV proportional or on/off output for Cl/Br feeders.
Weekly anti algae timer and level probe.
Liquid ends and pump head made of PVDF.

Wheel control system

Alarm output

RS485 output

Measurement range:
from 0 to 14 pH
from 0 to 10 mg/l Cl_2

Optional: free of voltage EV contact.

PRESSURE		FLOW	
7	bar	6	l/h
5	bar	1	l/h
3	bar	10	l/h

WDPHCF

WDPHCF / WDPHCF PER
Proportional controller with 2 dosing pumps for pH (acid- base) and flocculant. 230VAC EV proportional or on/off output for Cl/Br feeders. Level probe and gr/day flocculant dosing. Liquid ends and pump head made of PVDF.

Also available with peristaltic pumps (WDPHCF PER).

Wheel control system

Alarm output

RS485 output

Measurement range:
from 0 to 14 pH
from 0 to 10 mg/l Cl_2

Optional: free of voltage EV contact.

PRESSURE		FLOW	
7	bar	6	l/h
5	bar	1	l/h
3	bar	10	l/h

All-in-one dosing pumps

Dry feeder and salt chlorine generator measurement and control
Bromine, pH and active oxygen measurement and control

WDPHOS

WDPHOS
Proportional controller with 2 dosing pumps for pH (acid- base) and active oxygen. Level probe. Temperature reading with enclosed probe. Weekly or daily (hr) active oxygen dosing.Liquid ends and pump head made of PVDF.

Settings:

- daily or weekly timer
- temperature compensation - pool size

Wheel control system Alarm output

RS485 output

PH measurement range: from 0 to 14

Optional: free of voltage EV contact.

PRESSURE		FLOW	
7	bar	6	l/h
5	bar	1	l/h
3	bar	10	l/h

MULTI-FUNCTION DOSING PUMPS

Flow control

(Constant, Divide, Multiply, PPM, Batch, Volt, mA, %, ml/q), stand-by* and flow sensor input*, alarm output** and level control.

AMS MF

PRESSURE	FLOW
25 bar	5 l/h
15 bar	10 l/h
10 bar	15 l/h
7 bar	20 l/h
3 bar	40 l/h
2 bar	60 l/h

KMS MF

PRESSURE		FLOW	
2	bar	18	l/h
5	bar	10	l/h
20	bar	1	l/h
18	bar	2	l/h
15	bar	4	l/h
10	bar	5	l/h
8	bar	8	l/h
5	bar	1	l/h

Multifunctions mode dosing pumps

Flow control

(Constant, Divide, Multiply, PPM, Batch, Volt, mA, %, ml/q), stand-by* and flow sensor input*, alarm output** and level control.

TMS MF

PRESSURE	FLOW
20 bar	5 l/h
5 bar	15 l/h
4 bar	20 l/h
3 bar	30 l/h
1 bar	50 l/h
0 bar	100 l/h

TMS MF + CTFI

TMS MF + CTFI
Foot-bath disinfection system.
It works with a pulser sender water meter (1/2" size).
% control with level probe.

CTFI
1/2"

PRESSURE	FLOW
20 bar	5 l/h
5 bar	15 l/h
4 bar	20 l/h
3 bar	30 l/h
1 bar	50 l/h
0 bar	100 l/h

Dosing pumps

Footbath disinfection systems

VMS MF + CTFI

PRESSURE		FLOW	
20	bar	1	l/h
18	bar	2	l/h
18	bar	4	l/h
15	bar	2	l/h
15	bar	4	l/h
15	bar	5	l/h
10	bar	4	l/h
10	bar	5	l/h
10	bar	10	l/h
7	bar	6	l/h
5	bar	1	l/h
5	bar	10	l/h
5	bar	12	l/h
4	bar	8	l/h
3	bar	10	l/h
2	bar	15	l/h
1	bar	16	l/h

VMS MF + CTFI

Foot-bath disinfection system.

It works with a pulser sender water meter (1/2" size).

% control with level probe.

CTFI

1/2"

VMS MF + CTFI & CWFA

VMS MF + CTFI & CWFA
Dechloration system for water filters.

It works with a pulse sender water meter (1.1/2” or 2” size).

Proportional volume control (product ppm) with level meter.

CTFI
1”1/2 e 2”

CWFA
3” e 4”

PRESSURE		FLOW	
20	bar	1	l/h
18	bar	2	l/h
18	bar	4	l/h
15	bar	2	l/h
15	bar	4	l/h
15	bar	5	l/h
10	bar	4	l/h
10	bar	5	l/h
10	bar	10	l/h
7	bar	6	l/h
5	bar	1	l/h
5	bar	10	l/h
5	bar	12	l/h
4	bar	8	l/h
3	bar	10	l/h
2	bar	15	l/h
1	bar	16	l/h

Dosing pumps

Dosing and Control Systems for Algaecide, Active Oxygen and Flocculant

VMS MF

Algaecide

PRESSURE		FLOW	
20	bar	1	l/h
18	bar	2	l/h
18	bar	4	l/h
15	bar	2	l/h
15	bar	4	l/h
15	bar	5	l/h
10	bar	4	l/h
10	bar	5	l/h
10	bar	10	l/h
7	bar	6	l/h
5	bar	1	l/h
5	bar	10	l/h
5	bar	12	l/h
4	bar	8	l/h
3	bar	10	l/h
2	bar	15	l/h
1	bar	16	l/h

CONSTANT MODE DOSING PUMPS

Flow control

Constant mode dosing pumps with level and flow control. Double frequency scale.

AMS CL PLUS

PRESSURE	FLOW
25 bar	5 l/h
15 bar	10 l/h
10 bar	15 l/h
7 bar	20 l/h
3 bar	40 l/h
2 bar	60 l/h

Constant mode dosing pumps

Flow control

K CL PLUS

PRESSURE	FLOW
20 bar	1 l/h
18 bar	2 l/h
15 bar	4 l/h
10 bar	5 l/h
8 bar	8 l/h
5 bar	1 l/h
5 bar	10 l/h
2 bar	18 l/h

Constant mode dosing pumps

Flow control

Constant mode dosing pumps with level and flow control. Double frequency scale.

T CL

PRESSURE	FLOW
20 bar	5 l/h
5 bar	15 l/h
4 bar	20 l/h
3 bar	30 l/h
1 bar	50 l/h
0 bar	100 l/h

V CL

PRESSURE		FLOW	
20	bar	1	l/h
18	bar	2	l/h
18	bar	4	l/h
15	bar	2	l/h
15	bar	4	l/h
15	bar	5	l/h
10	bar	4	l/h
10	bar	5	l/h
10	bar	10	l/h
7	bar	6	l/h
5	bar	1	l/h
5	bar	10	l/h
5	bar	12	l/h
4	bar	8	l/h
3	bar	10	l/h
2	bar	15	l/h
1	bar	16	l/h

VCOG & VCLG

Flocculant

VCOG & VCLG

Metering pump for flocculant.

Double scale (24h):
- 0 to 300 gr/day
- 0 to 3000 gr/day

Level probe included.

PRESSURE

5 **bar**

FLOW

3000 **gr/24h**

Dosing pumps

Dechloration system for filters cleaning waters

VCLD

VCLD
Dechlorination system for waters filters (chlorine).
Level meter. SEFT C contact less water sensor (fittings 3/4”).
SEFT P flow sensor (fittings 1/2”).

Settings:
- 0-800 gr/h
- 0-8000 gr/h

Level probe included.

SEFT C and SEFT P are optional.

PRESSURE	FLOW
3 bar	10 l/h

VCLS

Scent and essences dosing

VCLS
Silenced pump for scent and essences dosing at spas and hammam centres.

Double scale:
- 0 to 100 g/hr
- 0 to 1000 g/hr

Level probe included.

PRESSURE

7 **bar**

FLOW

1 **l/h**

Dosing pumps

Scent and essences dosing for spa

VCLSE

C.E. Scent and essences dosing

VCLSE
Silenced pump for scent and essences dosing at spas and hammam centres. Contact (N.O.) for external control.

Double scale:
- 0 to 100 g/hr
- 0 to 1000 g/hr

Level probe included.

PRESSURE		FLOW	
7	bar	1	l/h

PROPORTIONAL DOSING PUMPS WITH PARAMETER MEASUREMENT

PH / ORP measurement & control

TMS PH & TMS RH

Proportional dosing pumps with pH and/or ORP measurement and control, with overdose alarm.

TMS PH
Proportional pump driven by internal built-in pH meter (0÷14pH) stand-by and level control, supplied without pH probe.

TMS RH
Proportional pump driven by internal built-in ORP meter (0÷1000mV) stand-by and level control, supplied without ORP probe.

PRESSURE		FLOW	
20	bar	5	l/h
5	bar	15	l/h
4	bar	20	l/h
3	bar	30	l/h
1	bar	50	l/h
0	bar	100	l/h

Proportional dosing pumps with parameter measurement

PH / ORP measurement & control

VMS PO

VMS PO
Proportional pump driven by internal built-in pH meter (0/14pH) or ORP meter (-1000mV/ +1000mV). Parameter set by menu.
Level control. PVDF pump head and accessories.
Fast calibration on standard value.
Restore last calibration.

PRESSURE	FLOW
20 bar	1 l/h
18 bar	2 l/h
18 bar	4 l/h
15 bar	2 l/h
15 bar	4 l/h
15 bar	5 l/h
10 bar	4 l/h
10 bar	5 l/h
10 bar	10 l/h
7 bar	6 l/h
5 bar	1 l/h
5 bar	10 l/h
5 bar	12 l/h
4 bar	8 l/h
3 bar	10 l/h
2 bar	15 l/h
1 bar	16 l/h

VMSA H_2O_2

Active oxygen

VMSA H_2O_2
Active oxygen pump.

Also available with peristaltic pump (VMSA H2O2 PER).

Settings:
- day/week timer
- temperature compensation
- pool size

Level and temperature probes included.

PRESSURE	FLOW
3 bar	4 l/h
2 bar	10 l/h

MULTIPARAMETER DIGITAL CONTROLLERS

Measurement and control of several parameters simultaneously

pH / Total Chlorine / Free chlorine / Combined Chlorine / ORP / Turbidity Conductivity / Inductive conductivity / Bromine / Ozone + Temperature

CENTURIO POOL series

CENTURIO
Options:
- USB for data log recording
- Current Output (0/4 - 20 mA)
- Ethernet
- 3G/4G modem
- MODBUS RTU & TCP/IP
- WIFI

RANGES

pH
from 0 to 14 pH

ORP
from -1000 to 1000 mv

Total chlorine
from 0 to 20 mg/l

Free chlorine
from 0 to 20 mg/l

Combined chlorine
from 0 to 10 mg/l

Bromine
from 0 to 10 mg/l

Turbidity
from 0 to 4000 NTU

Temperature
from 0 to 100 °C

Conductivity
from 0 to 300 mS

CENTURIO POOL is a digital regulation and measurement system for multi-parameter control in swimming pool water treatment. It combines complete control and extreme ease of use with the elegance of the case made by Giugiaro Design.

Equipped with a Linux operating system, a high-performance ARM A5 microprocessor and a large color touchscreen, CENTURIO POOL can be set to work with pH priorities and can control flocculant output, shock chlorination and backwashing of filters and simultaneously manage up to 10 channels to read the following parameters: pH, free chlorine, combined chlorine, active free chlorine, total chlorine, conductivity, ORP, NTU, product levels, pool water level. For each channel CENTURIO POOL has 2 digital setpoints (ON / OFF), 2 proportional setpoints (IS), 1 mA output setpoint and 1 Temperature setpoint; you can also set 6 timers with a maximum of 10 daily schedules each.

CENTURIO POOL can be connected to the Internet via WIFI, GSM or ETHERNET and remotely controlled via NIMBUS, the online control system designed by EMEC. It is also equipped with the MODBUS serial communication protocol (optional) which allows connection with other devices within RS485 networks.

NIMBUS

DIGITAL SERVICES

Multiparameter digital controllers

Measurement and control of several parameters simultaneously

pH / Total Chlorine / Free chlorine / Combined Chlorine / ORP / Turbidity Conductivity / Inductive conductivity / Bromine / Ozone + Temperature

LDPHXX series

LDPHXX / LDPHXX PLUS
Options:
- USB for data log recording
- Current Output (0/4 - 20 mA)
- Ethernet
- 3G/4G modem
- MODBUS
- WIFI

LDPHXX PLUS features
- 5 relais (2 setpoint; alarm; probe cleaning; circulation)
- Probe Cleaning
- PID
- mA output

*Specificare i parametri e il tipo di sonda per cloro al momento dell'ordine

MODELS

LDPHRH / LDPHRH PLUS
pH (0/14) - Redox (0/1000 mV) - °C (0/99,9)

LDPHCL* / LDPHCL* PLUS
pH (0/14) - Cloro (0/10 mg/l Cl_2) - °C (0/99,9)

LDPHBR / LDPHBR PLUS
pH (0/14) - Bromo (0/10 mg/l Br_2) - °C (0/99,9)

LDPHDO / LDPHDO PLUS
pH (0/14) - O_2 (0/200 mg/l H_2O_2) - °C (0/99,9)

Controller for acid (pH) and a second parameter. Wheel with "EASY-NAV" control, Flow control, Local & Remote Controlled, NIMBUS web communication, Permanent data storage with system log, PT100 temperature probe, Stand-by input, Alarms: damaged probes - max dosage - threshold - levels - flow, Programmable delay at dosing start-up (up to 60 minutes), Priority dosage, Probe readout menu, Probes check up, Multiple probe readings can be viewed, Working modes: on/off, impulsive proportional, proportional PWM and fixed PWM, Automatic or manual dosing activity, Chlorine/Bromine selection with ECL6 (LDPHCL), mA output (option).

NIMBUS

DIGITAL SERVICES

Single parameter digital controllers

pH - ORP - Cl2 - Br2 - O3 - Total Chlorine - H2O2 - Inductive conductivity - Turbidity + Temperature measurement and control

LDS series

LDS / LDS PLUS
Options:
- USB for data log recording
- Current Output (0/4 - 20 mA)
- Ethernet
- 3G/4G modem
- MODBUS
- WIFI

LDS PLUS features
- 5 relais (2 setpoint; alarm; probe cleaning; circulation)
- Probe Cleaning
- PID
- mA output

MODELS

LDSPH / LDSPH PLUS
pH measurement and control

LDSRH / LDSRH PLUS
ORP measurement and control

LDSCL / LDSCL PLUS
Chlorine measurement and control (reading scale based on probe)

LDSCD / LDSCD PLUS
Conductivity measurement and control

LDSCDIND / LDSCDIND PLUS
Inductive conductivity measurement and control (ECDINDPT probe)

LDSETORB2 / LDSETORB2 PLUS
Turbidity measurement and control (ETORB2 probe)

LDSTRC / LDSTRC PLUS
Florescence measurement and control

LDSFL / LDSFL PLUS
Fluorine measurement and control

Wheel with “EASY-NAV” control, flow control, local & Remote Control, ERMES web communication, permanent data storage with system log, PT100 temperature probe, Stand-by input, Alarms: damaged probes - max dosage - threshold - levels - flow, Programmable delay at dosing start-up (up to 60 minutes), Priority dosage, Automatic temperature compensation, Probe readout menu (LDSCDIND), Working modes: on/off, impulsive proportional, proportional PWM and fixed PWM, Automatic or manual dosing activity, mA output (option).

NIMBUS

DIGITAL SERVICES

Single parameter digital controllers

RACK MOUNTING CONTROLLERS
Controller for: pH, ORP, Chlorine (Total chlorine, Free Chlorine, Chlorine Dioxide, Hydrogen Peroxyde, Ozone, Bromine, Peracetic Aciddepending on the probe), Conductivity (Probes not included). 2 On-Off/proportional setpoints, Flow alarm, Flow sensor stand-by input, 0÷20 mA or 4÷20 mA output proportional to read measured value and programmable in the reading range.

JA

JA PRO control instruments are rack mounting (96x96) single reading systems with temperature reading. On/Off, impulsive proportional and PID are main working modes.
It can set and monitor: pH, ORP, chlorine (depending on the probe: total chlorine, free chlorine, chlorine dioxide, hydrogen peroxide, ozone, bromine or paracetic acid) and conductivity (uS/S - Ohm - TDS / PPM) with automatic range and probe / product selection (H3PO4 - H2SO4 - HNO3 - HCl - NaOH - NaCl). Probes are not included.

JA PRO has: 2 setpoints (on/off, proportional), flow alarm, flow sensor stand-by input, 0-20 mA or 4-20 mA output proportional to read value and programmable in the reading range, alarm output. Avalilable low voltage 12VDC or 24VDC power supply. Available IP54 protection cover.
JA PRO is equipped with mA module and MODBUS serial communication to be connected to other devices on RS485 networks and TCP/IP MODBUS.

JA PRO
Options:
- 12VDC or 24VDC power supply
- IP54 protection

JA PRO
Features:
- mA module
- MODBUS serial communication

J DIGITAL & DIN DIGITAL

J DIGITAL

Rack mounting (96x48) single reading systems

J DIGITAL control instruments are a series of rack mounting (96x48) single reading systems that meets many applications.

It can set and monitor: pH, ORP, chlorine (depending on the probe: total chlorine, free chlorine, chlorine dioxide, hydrogen peroxide, ozone, bromine or paracetic acid), conductivity, ozone, chlorine dioxide and temperature.

Probes are not included.

J DIGITAL models have: 2 setpoints (on/off, proportional), flow alarm, flow sensor stand-by input, 0-20 mA or 4-20 mA output proportional to read value and programmable in the reading range. Available IP54 protection cover.

DIN DIGITAL

Rail mounting (6 modules) single reading system

DIN DIGITAL control instruments are a series of rail mounting (6 modules) single reading systems that meets many applications.

It can set and monitor: pH, ORP, chlorine (depending on the probe: totalchlorine, free chlorine, chlorine dioxide, hydrogen peroxide, ozone, bromine or paracetic acid), conductivity, ozone, chlorine dioxide and temperature. Probes are not included.

DIN DIGITAL models have: 2 setpoints (on/off, proportional), flow alarm, flow sensor stand-by input, 0-20 mA or 4-20 mA output proportional to read value and programmable in the reading range.

MODEM AND EXTERNAL COMMUNICATION MODULES

For LD, WDPHXX and CENTURIO controller series

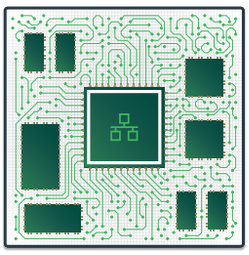

ETHERNET MODULE
Internal standard ETHERNET (RJ45) controller for LD encoder.

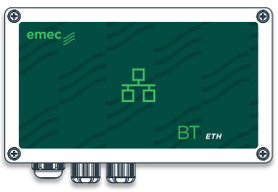

BT ETH
Ethernet controller for standard RJ45 network. IP65.

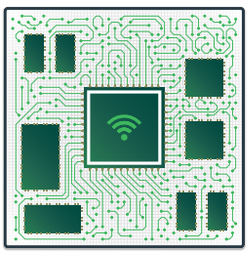

WIFI MODULE
Module for WIFI network. IP65.

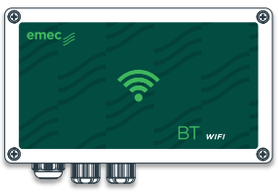

BT WIFI
Module for WIFI connection. IP65.

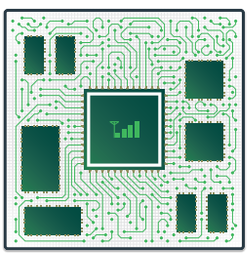

3G/4G MODULE
Internal 3G/4G modem for LD encoder.

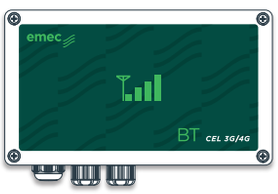

BT CEL
Modem for mobile network. IP65.

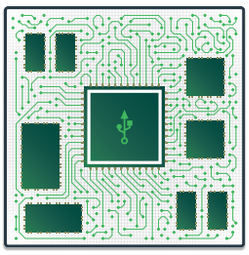

USB MODULE
Module for USB connection.
IP65.

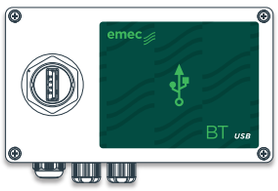

BT USB
USB module for USB datalog recording. IP65.

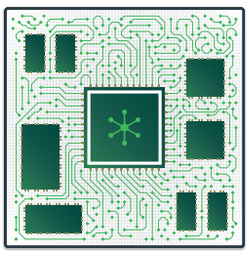

MODBUS MODULE
MODBUS RTU module for PLC connection.

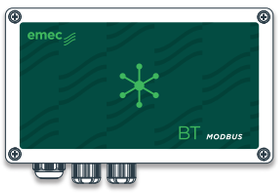

BT MODBUS
Serial communication module for PLC connection.

Remote measurement and control

CONNECTION EXAMPLE

ETHERNET - WIFI

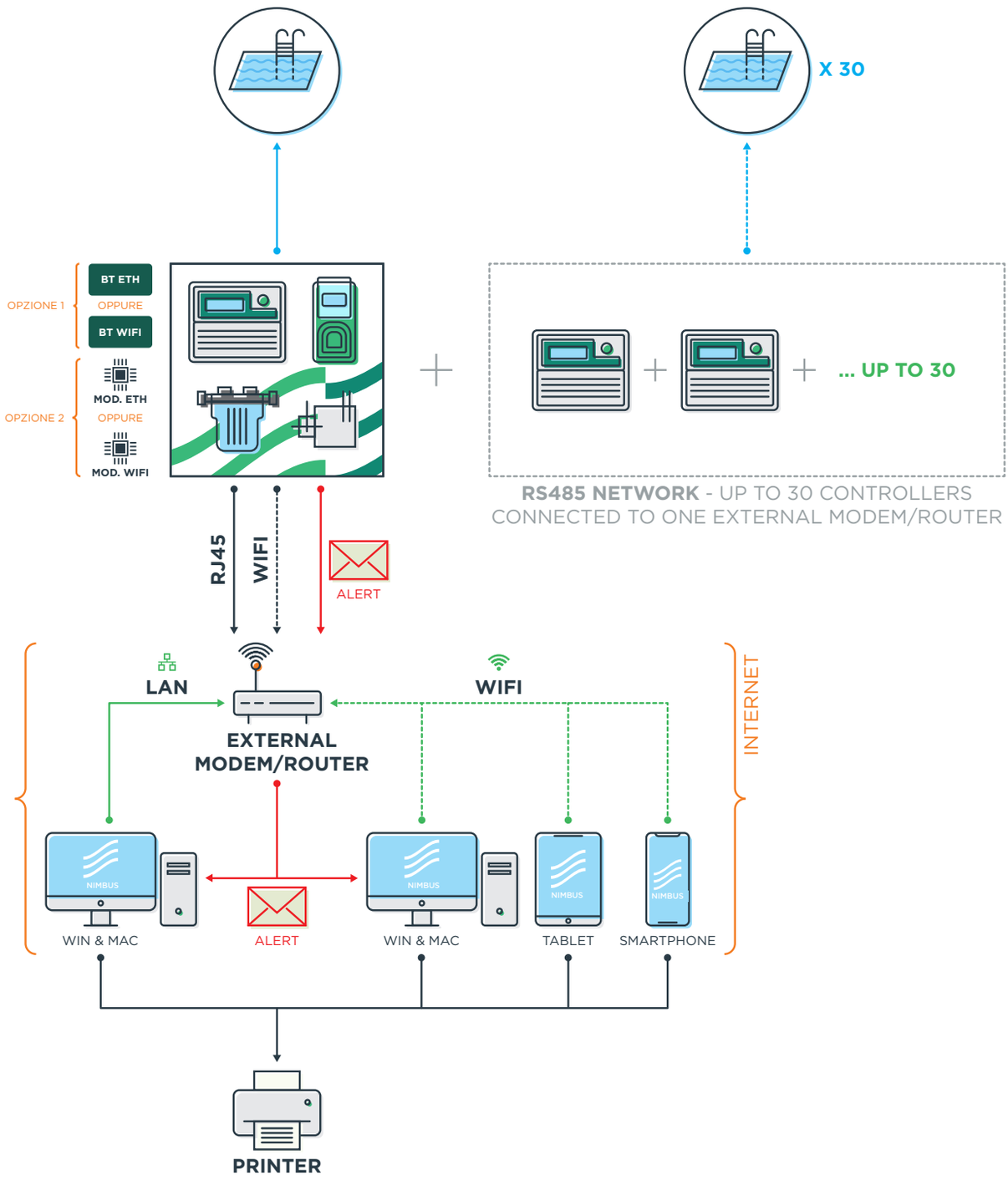

CONNECTION EXAMPLE

GSM - 3G/4G

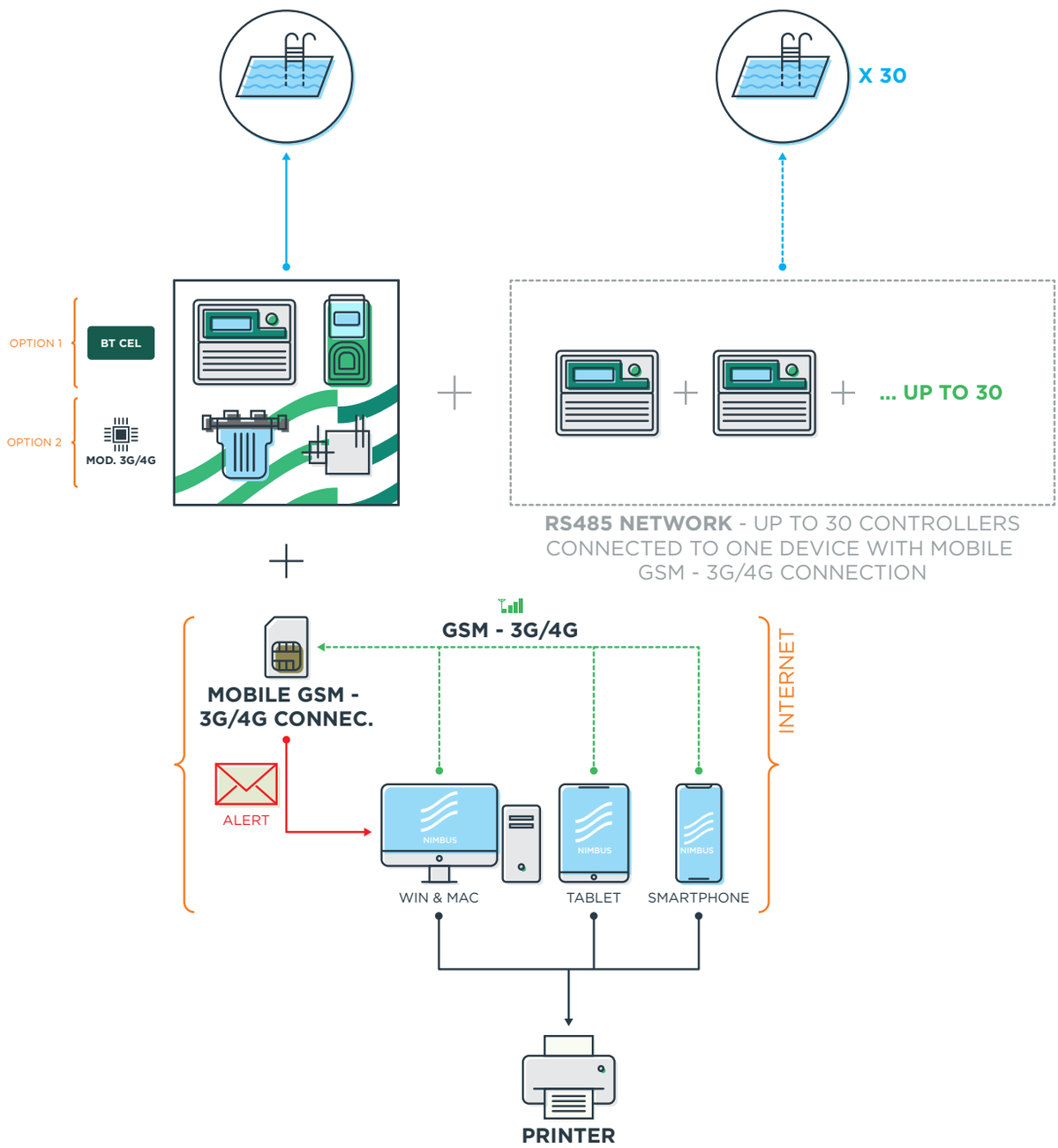

ALL-IN-ONE CONTROL AND DOSING SOLUTIONS

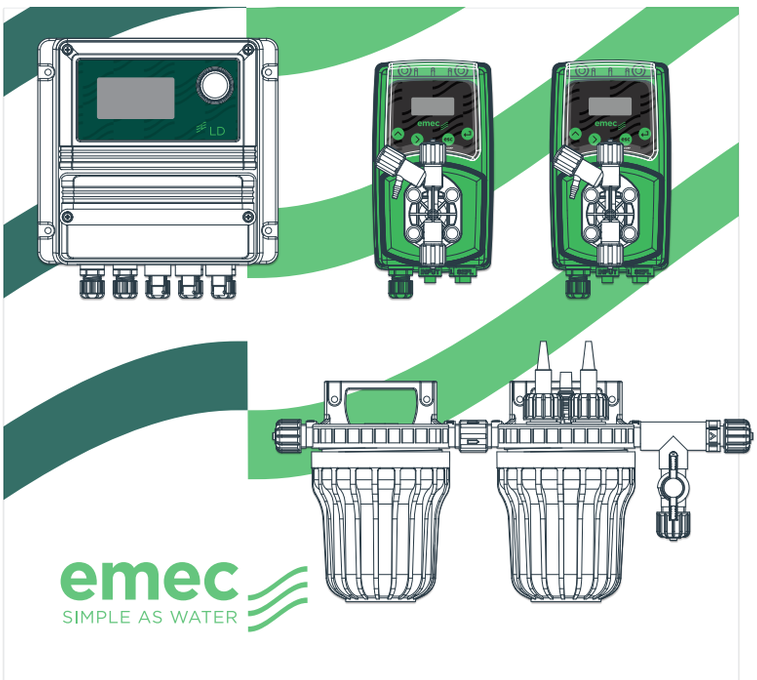

PA-LDPHRH

PH AND ORP PROPORTIONAL CONTROL

- Controller LDPHRH
- Dosing pump VMS MF 03 10 (10 l/h)
- Dosing pump VMS MF 03 10 (10 l/h)
- Filter NFIL
- pH probe EPHS
- ORP probe ERHS
- Probe holders NPED4

Size: 600x650 mm
Customized coloured background on demand

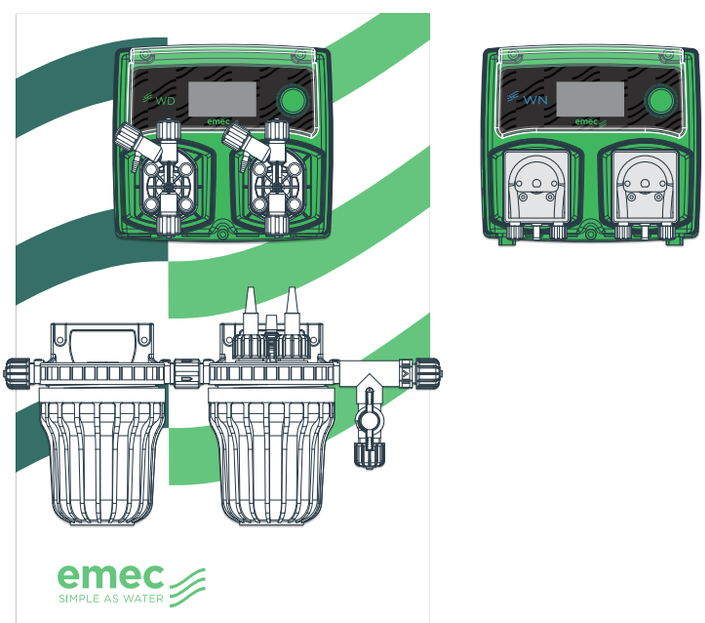

PA-WDPHOS & PA-WNPHOS

PH AND ACTIVE OXYGEN PROPORTIONAL CONTROL

- Controller WDPHOS 03 10 (10 l/h) and 03 04 (4 l/h) or WNPHOS PER (with peristaltic dosing pumps)
- Filter NFIL
- Temperature probe ETEPTCH18
- pH probe EPHS
- Probes holder NPED4

Optional: Also available with WNPHOS PER

Size: 400x600 mm
Customized coloured background on demand.

OUTPUT **RS485**

The images contained in these pages are for illustrative purposes only. For more information on possible configurations, contact the sales office or your sales representative.

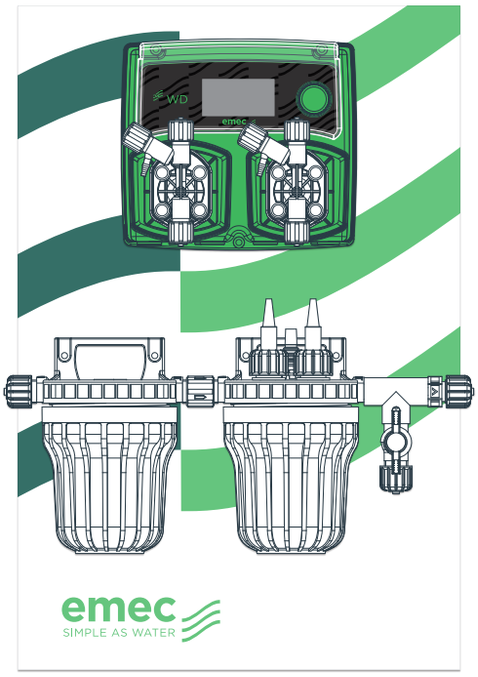

PA-WDPHRH
& PA-WNPHORH

PH AND ORP PROPORTIONAL CONTROL

- Controller WDPHRH 03 10 (10 l/h), 05 01 (1 l/h) and 10 04 (4 l/h), or WDPHRH PER (with peristaltic dosing pumps).
- Filter NFIL
- Probe ORP ERHS
- Probe pH EPHS
- Probes holder NPED4

Optional: Also available with WNPHRH PER

Size: 400x600 mm
Customized coloured background on demand.

OUTPUT **RS485**

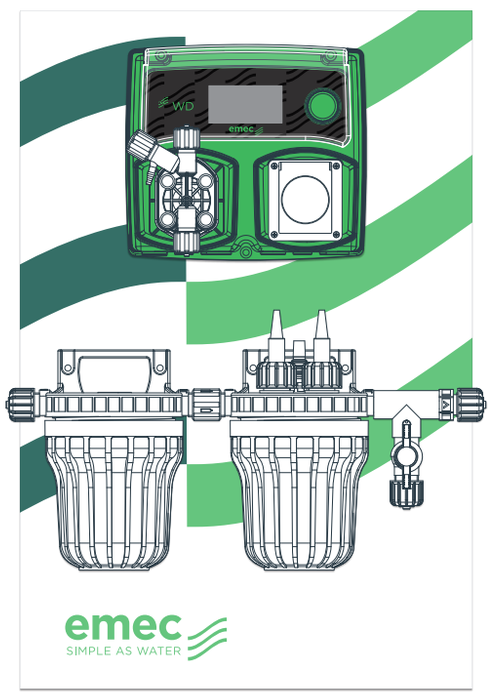

PA-WDPHEV

PH OR ORP PROPORTIONAL CONTROL, DRY FEEDER SOLENOID VALVE OR SALT GENERATOR (230VAC / 10A) OUTPUT

- Controller WDPHRHS 07 06 (6 l/h) or 05 01 (1 l/h) 2. Filter NFIL
- Probe ORP ERHS
- Probe pH EPHS
- Probes holder NPED4

Size: 400x600 mm
Customized coloured background on demand.

OUTPUT **RS485**

All-in-one systems

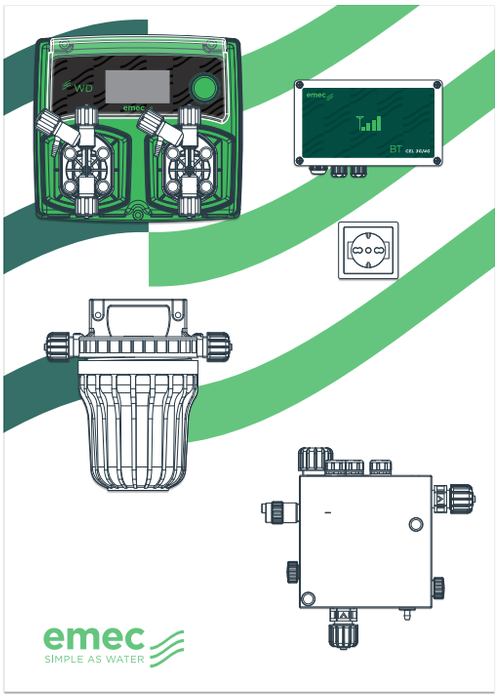

PA-WDPHCFSA
& PA-WDPHCASA

SALT CHLORINE GENERATOR VERSION:
Flocculant with continuos dosing PA-WDPHCFSA
Anti algae with weekly timer PA-WDPHCASA

- Controller WDPHCA 07 06 (6 l/h), 05 01 (1 l/h) or 10 04 (4 l/h)
- Probe pH EPHS
- Filter NFIL
- Proximity sensor SEPR
- Open amperometric cell ECL6
- Modem BT CEL
- Output 10 A 220 VAC

Optional: Free of voltage EV contact.

Size: 500x700 mm
Customized coloured background on demand.

OUTPUT **RS485**

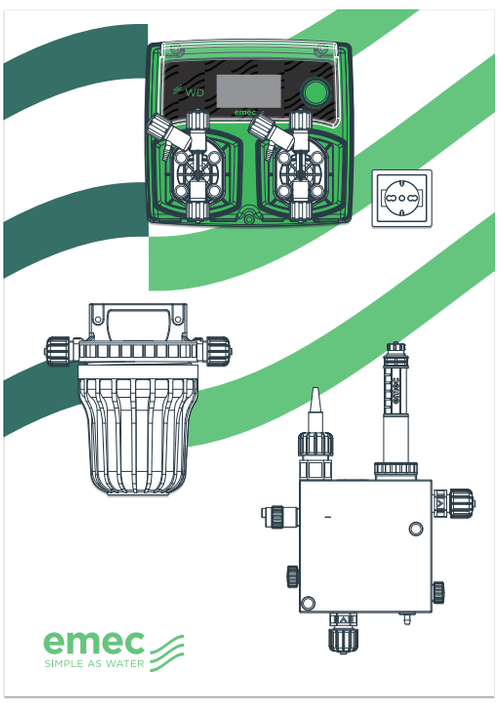

PA-WDPHCA/CF
& PA-WDPHBA/BF

CHLORINE / BROMINE DRY FEEDER:
Flocculant with continuos dosing PA-WDPHCFBF
Anti algae with weekly timer PA-WDPHCABA

- Controller WDPHCL 07 06 (6 l/h), 05 01 (1 l/h) or 10 04 (4 l/h)
- Probe pH EPHS
- Chlorine probe SCL3S/20 or Bromine probe SBR 1/20
- Filter NFIL
- Proximity sensor SEPR
- Probes holder PEF1R
- Output 10 A 220 VAC

Optional: Free of voltage EV contact.

Size: 500x700 mm
Customized coloured background on demand.

OUTPUT **RS485**

Le immagini contenute in queste pagine sono solo a scopo illustrativo, per maggiori informazioni su possibili configurazioni, contattare l'ufficio commerciale o il proprio rappresentante commerciale di riferimento.

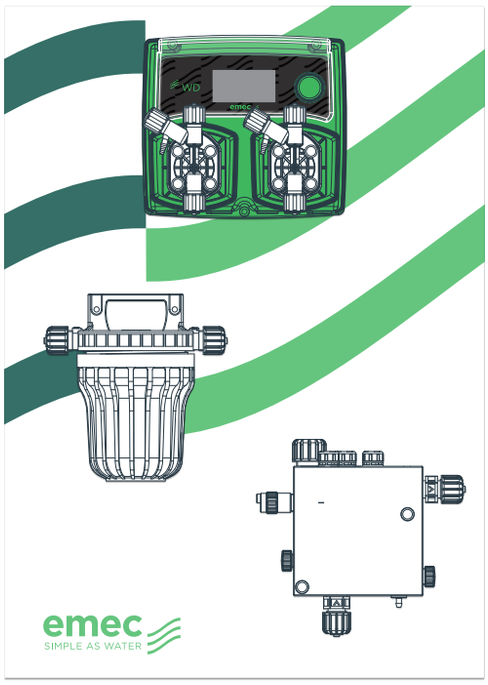

PA-WDPHCL
& PA-WNPHCL

PH AND CHLORINE PROPORTIONAL CONTROL

- Controller WDPHCL 07 06 (6 l/h), 05 01 (1 l/h) or 10 04 (4 l/h), or WNPHCL PER (with peristaltic dosing pumps).
- Filter NFIL
- Proximity sensor SEPR
- Probe pH EPHS
- Open amperometric cell ECL6

Optional: Also available with WNPHCL PER

Size: 500x700 mm
Customized coloured background on demand.

OUTPUT **RS485**

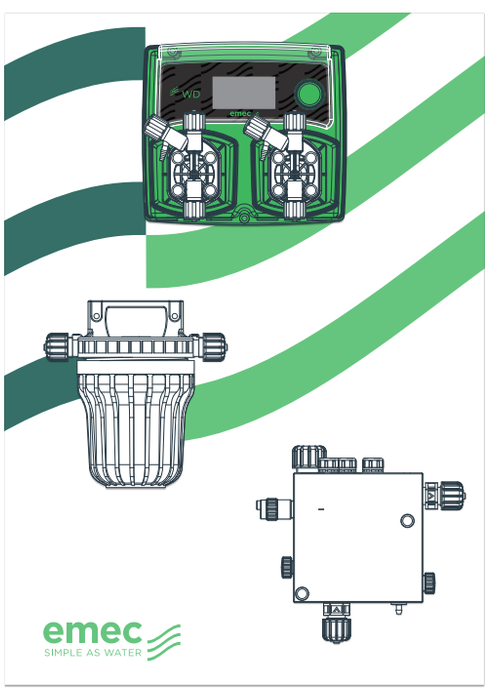

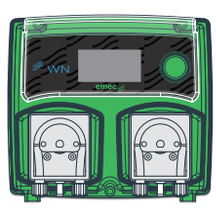

PA-WDPHCLO
& PA-WNPHCLO

PH AND CHLORINE PROPORTIONAL CONTROL (INORGANIC/ORGANIC)

- Controller WDPHCL 07 06 (6 l/h), 05 01 (1 l/h) or 10 04 (4 l/h), or WNNPHCL PER (with peristaltic dosing pumps).
- Filter NFIL
- Proximity sensor SEPR
- Probe pH EPHS
- Chlorine probe SLC3S/20
- Probes holder PEF1R

Optional: Also available with WNPHCLO PER

Size: 500x700 mm
Customized coloured background on demand.

OUTPUT **RS485**

All-in-one systems

Controller based system with open amperometric cell ECL6

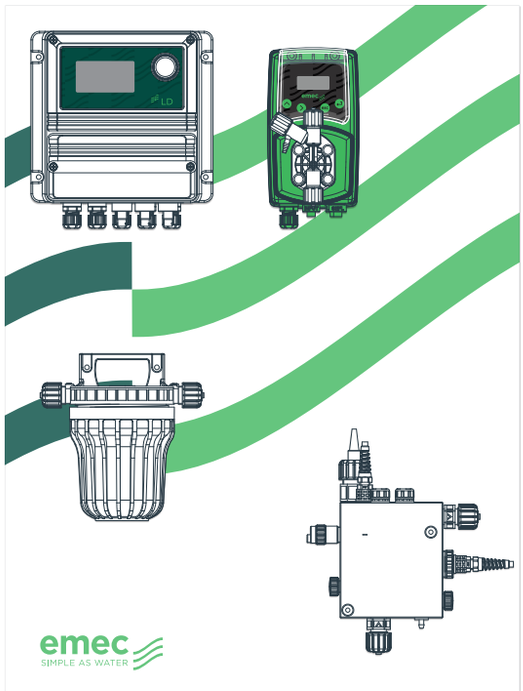

PA-LDPHCL

FOR DRY FEEDER USAGE (CHLORINE / BROMINE) OR SALT CHLORINE GENERATOR. MEDIUM SIZE POOL

- Controller LDPHCL
- Dosing pump for acid VMS MF 03 10 (10 l/h) 3. Filter NFIL
- Probe pH EPHS
- Proximity sensor SEPR
- Temperature probe ETEPTCH18
- Open amperometric cell ECL6

Size: 600x800 mm
Customized coloured background on demand.

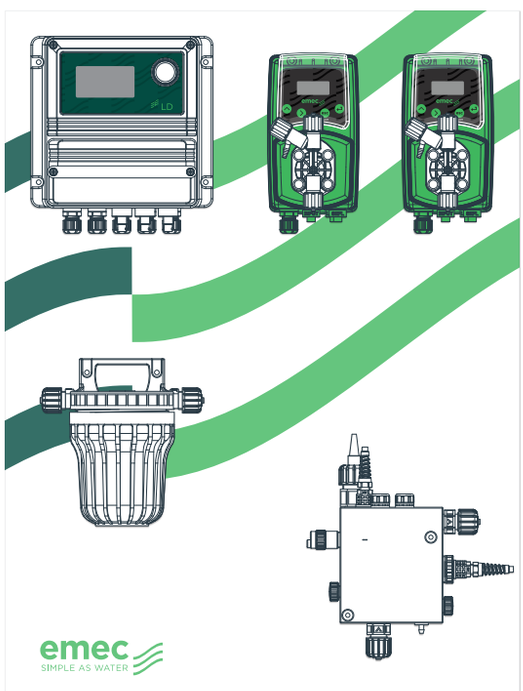

PA-LDPHCLO

PH AND CHLORINE PROPORTIONAL CONTROL. MEDIUM SIZE POOL

- Controller LDPHCL
- Dosing pump for acid VMS MF 03 10 (10 l/h)
- Dosing pump for chlorine VMS MF 02 15 (15 l/h)
- Filter NFIL
- Probe pH EPHS
- Proximity sensor SEPR
- Temperature probe ETEPTCH18
- Open amperometric cell ECL6

Size: 600x800 mm
Customized coloured background on demand.

The images contained in these pages are for illustrative purposes only. For more information on possible configurations, contact the sales office or your sales representative.

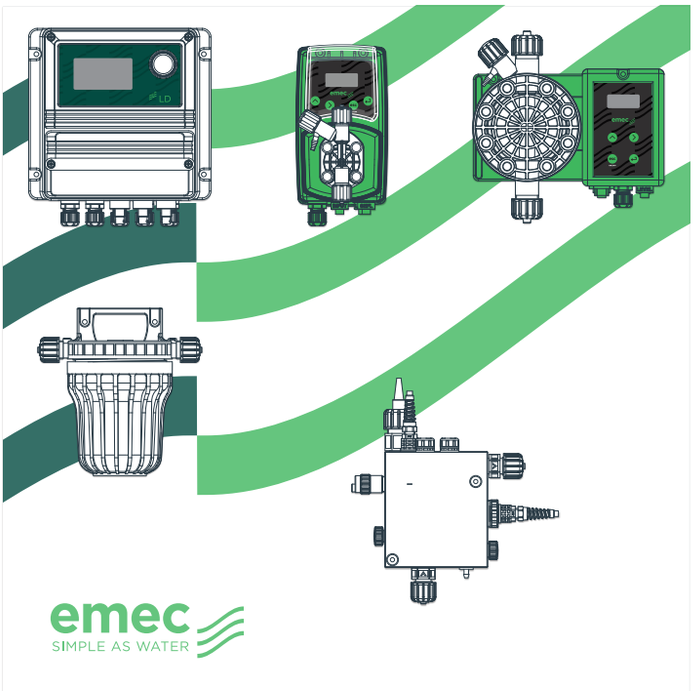

PA-LDPHCLOB

FOR PH AND CHLORINE PROPORTIONAL CONTROL. LARGE SIZE POOL

- Controller LDPHCL
- Dosing pump for acid VMS MF 02 15 (15 l/h)
- Dosing pump for chlorine TMS MF 03 30 (30 l/h)
- Filter NFIL
- Probe pH EPHS
- Proximity sensor SEPR
- Temperature probe ETEPTCH18
- Open amperometric cell ECL6

Size: 800x800 mm
Customized coloured background on demand.

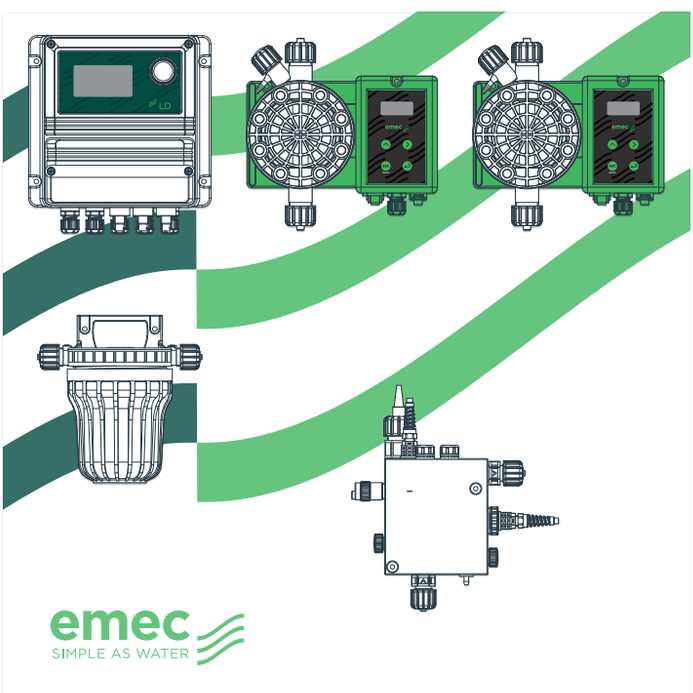

PA-LDPHCLOBG

FOR PH AND CHLORINE PROPORTIONAL CONTROL. LARGE SIZE POOL

- Controller LDPHCL
- Dosing pump for acid TMS MF 03 30 (30 l/h)
- Dosing pump for chlorine TMS MF 01 50 (50 l/h)
- Filter NFIL
- Probe pH EPHS
- Proximity sensor SEPR
- Temperature probe ETEPTCH18
- Open amperometric cell ECL6

Size: 800x800 mm
Customized coloured background on demand.

All-in-one systems

Controller based system with closed amperometric cell SCL3S/20 and PEF1

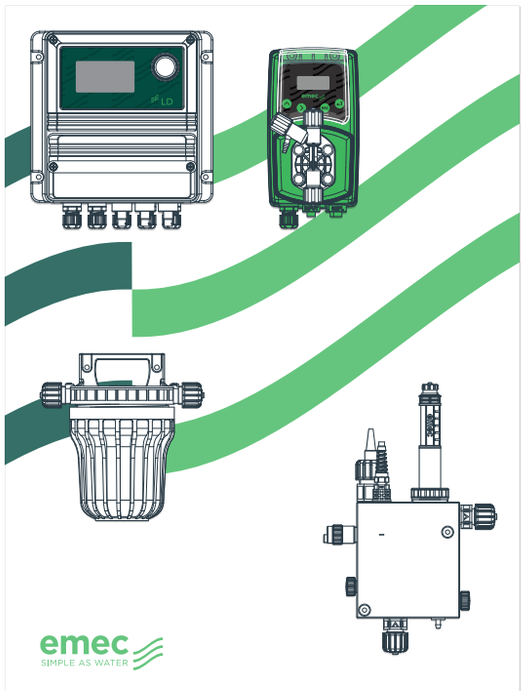

PA-LDPHCLV
& PA-LDPHBR

FOR DRY FEEDER OR SALT CHLORINE GENERATOR. MEDIUM SIZE POOL

- Controller LDPHCL
- Dosing pump for acid VMS MF 03 10 (10 l/h)
- Filter NFIL
- Proximity sensor SEPR
- Probe pH EPHS
- Chlorine probe SCL3S/20
- Temperature probe ETEPTCH18
- Probes holder PEF1R

PA-LDPHBR: Also available with bromine probe EBR 1/20.

Size: 600x800 mm
Customized coloured background on demand.

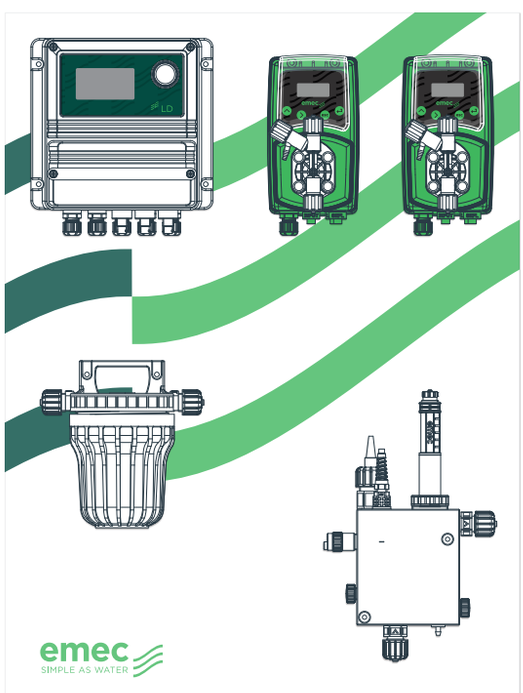

PA-LDPHCLVD

PH AND CHLORINE PROPORTIONAL CONTROL (INORGANIC/ORGANIC). MEDIUM SIZE POOL

- Controller LDPHCL
- Dosing pump for acid VMS MF 03 10 (10 l/h)
- Dosing pump for chlorine VMS MF 02 15 (15 l/h)
- Filter NFIL
- Proximity sensor SEPR
- Probe pH EPHS
- Chlorine probe SCL3S/20
- Temperature probe ETEPTCH18
- Probes holder PEF1R

Size: 600x800 mm
Customized coloured background on demand.

The images contained in these pages are for illustrative purposes only. For more information on possible configurations, contact the sales office or your sales representative.

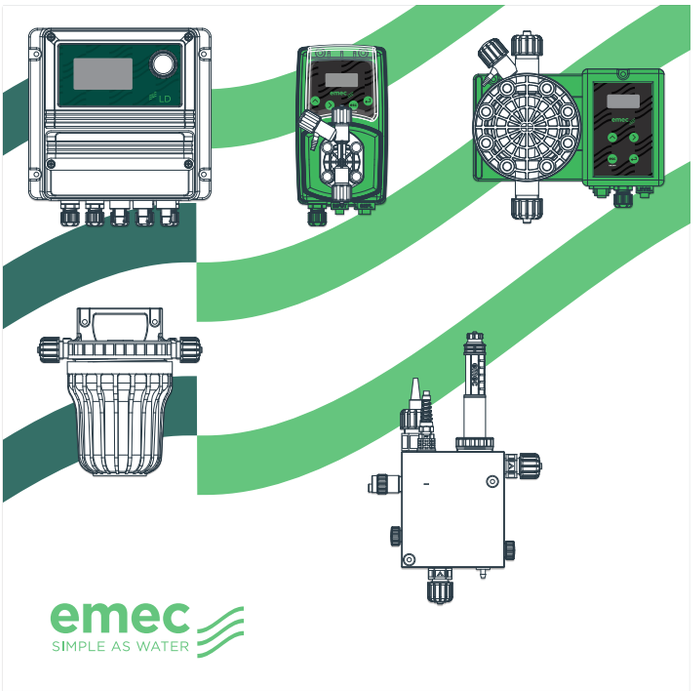

PA-LDPHCLVG

PH AND CHLORINE PROPORTIONAL CONTROL (INORGANIC/ORGANIC). BIG SIZE POOL

- Controller LDPHCL
- Dosing pump for acid VMS MF 02 15 (15 l/h)
- Dosing pump for chlorine TMS MF 03 30 (30 l/h)
- Filter NFIL
- Proximity sensor SEPR
- Probe pH EPHS
- Chlorine probe SCL3S/20
- Probes holder PEF1R

Size: 800x800 mm
Customized coloured background on demand.

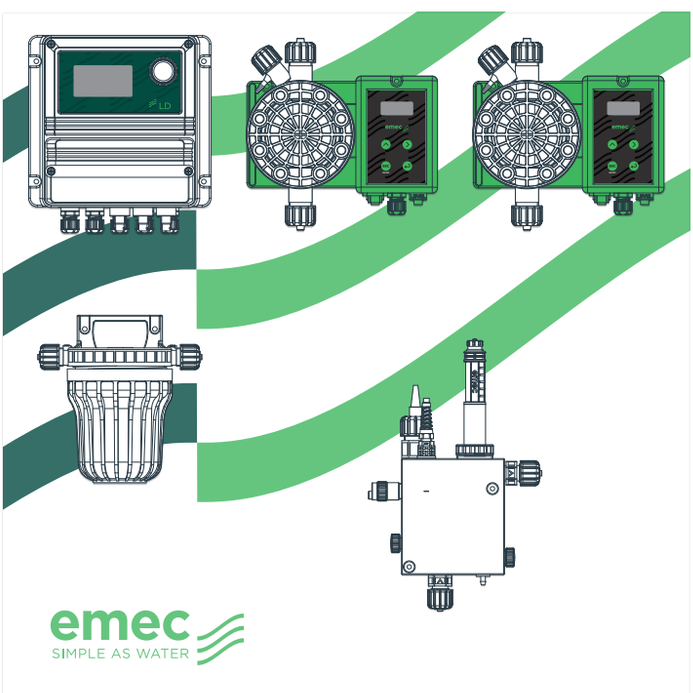

PA-LDPHCLGD

PH AND CHLORINE PROPORTIONAL CONTROL (INORGANIC/ORGANIC). BIG SIZE POOL

- Controller LDPHCL
- Dosing pump for acid TMS MF 03 30 (30 l/h)
- Dosing pump for chlorine TMS MF 01 50 (50 l/h)
- Filter NFIL
- Proximity sensor SEPR
- Probe pH EPHS
- Chlorine probe SCL3S/20
- Probes holder PEF1R

Size: 800x800 mm
Customized coloured background on demand.

Advanced all-in-one systems

PA-CEDB

PH, ORP, FREE CHLORINE, TOTAL CHLORINE, COMBINED CHLORINE AND TEMPERATURE ANTI ALGAE AND FLOCCULANT TREATMENT

- Controller CENTURIO POOL
- Dosing pump for acid VMS MF 03 10 (10 l/h)
- Dosing pump for chlorine VMS MF 02 15 (15 l/h)
- Dosing pump for flocculant VCLG
- Dosing pump for anti algae VMS MF 07 06 (6 l/h)
- Filter NFIL
- Probe di pH EPHS
- ORP probe ERHS
- Temperature probe ETEPTCH18
- Free chlorine probe SCL3S/20
- Total chlorine probe SCL8/20
- Proximity sensor SEPR
- Probes holder PEF22R

Optional: also available with Centurio Pool controller

Size: 1000x800 mm
Customized coloured background on demand.

The images contained in these pages are for illustrative purposes only. For more information on possible configurations, contact the sales office or your sales representative.

PA-CEDV

PH, ORP, FREE CHLORINE, TOTAL CHLORINE, COMBINED CHLORINE AND TEMPERATURE

- Controller CENTURIO POOL
- Dosing pump for acid VMS MF 03 10 (10 l/h)
- Dosing pump for chlorine VMS MF 02 15 (15 l/h)
- Filter NFIL
- Probe di pH EPHS
- ORP probe ERHS
- Temperature probe ETEPTCH18
- Free chlorine probe SCL3S/20
- Total chlorine probe SCL8/20
- Proximity sensor SEPR
- Probes holder PEF22R

Optional: also available with Centurio Pool controller

Size: 800x800 mm
Customized coloured background on demand.

Advanced all-in-one systems

PA-CEDT

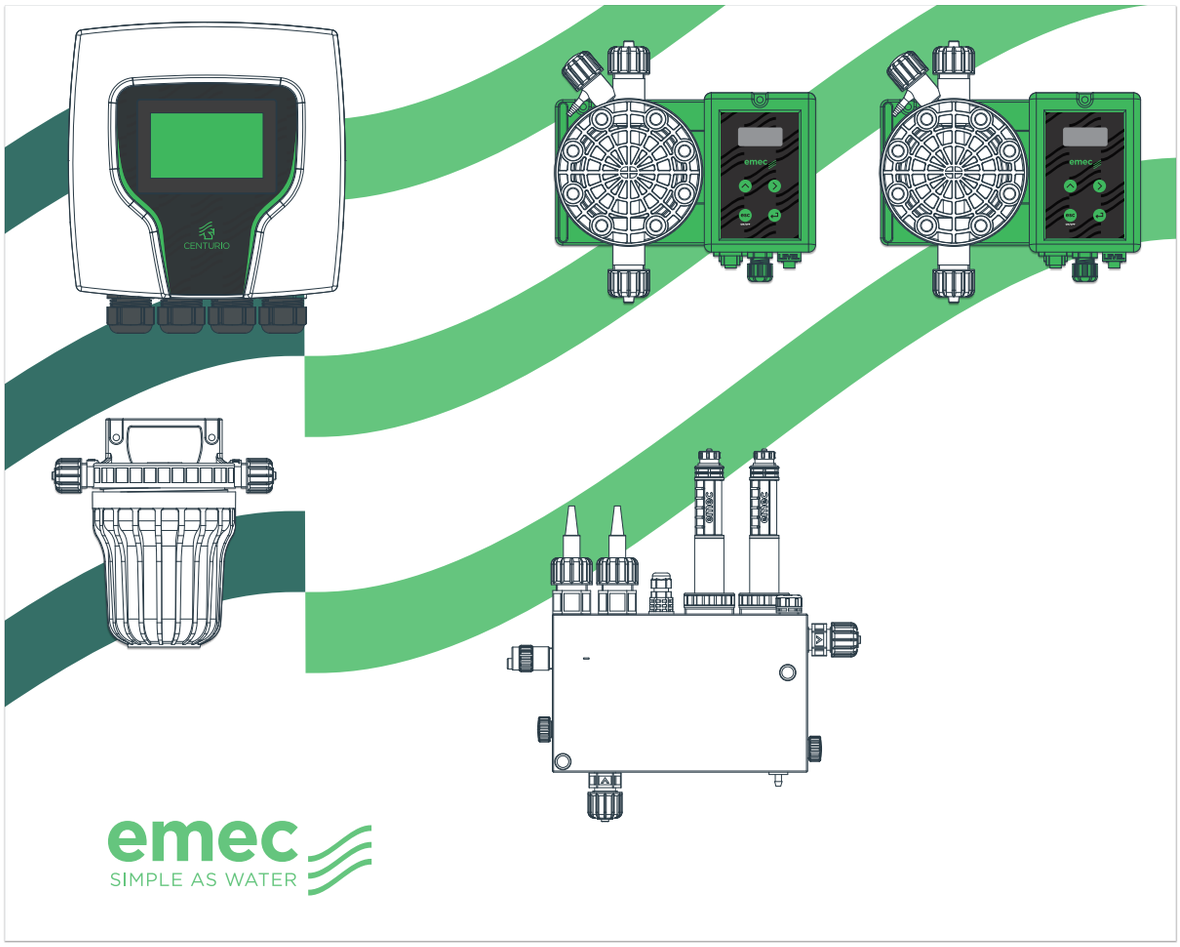

PH, ORP, FREE CHLORINE, TOTAL CHLORINE, COMBINED CHLORINE AND TEMPERATURE

- Controller CENTURIO POOL
- Dosing pump for acid TMS MF 03 30 (30 l/h)
- Dosing pump for chlorine TMS MF 01 50 (50 l/h)
- Filter NFIL
- Probe di pH EPHS
- ORP probe ERHS
- Temperature probe ETEPTCH18
- Free chlorine probe SCL3S/20
- Total chlorine probe SCL8/20
- Proximity sensor SEPR
- Probes holder PEF22R

Optional: also available with Centurio Pool controller

Size: 1000x800 mm
Customized coloured background on demand.

The images contained in these pages are for illustrative purposes only. For more information on possible configurations, contact the sales office or your sales representative.

ACCESSORIES

EPHS
pH electrode for pressures up to 7 bar/70°C (3.5 bar/80°C).
0.8 m cable. Epoxy body.
Minimum 100 µS.

ERHS
ORP electrode for pressures up to 7 bar/70°C (3.5 bar/80°C).
0.8 m cable. Epoxy body.
Minimum 100 µS.

BUFFER SOLUTIONS
Buffer solutions for probes calibration.

SCL8
Total chlorine amperometric cell (organic and inorganic),
from 0 to 2 mg/l;
from 0 to 20 mg/l, pH and temperature compensated.

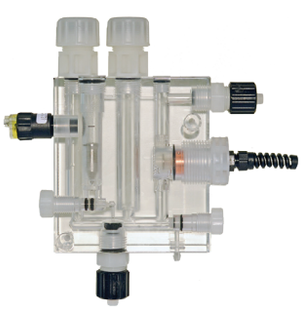

ECL6 / ECL12
Free chlorine / bromine amperometric celln(organic and inorganic),
from 0 to 10 mg/l.
Flow switch and flow adjustment. Electrodes holder for pH, Redox and temperature.
With proximity switch mod. SEPR. 6x8 fittings.
With LED light sold as option.

SCL3S/20
Free chlorine amperometric cell (organic and inorganic),
from 0 to 10 mg/l, pH and temperature compensated.

ETEPT
Temperature probe PT100 (0°C÷100 °C, max 10bar).
Suitable for LDxx, LDPHxx series instruments.

PEF22R
Holder for Chlorine, pH, Redox, free Chlorine, total Chlorine and temperature probes.
Provided type SEPR flow controller. With LED light sold as option.

Accessories

PEF1R
Off-line probes holder for ECL1/2/3/8/9/10/11 and pH, Redox and temperature, with flow switch and regulation.
With proximity switch mod. SEPR. 6X8 fittings.
With LED light sold as option.

NFIL
Filter with cartridge. Washable. PET (60 µ). 6x8 fittings.
With LED light sold as option.

EVLA
Electrovalve for dry feeder (chlorine / bromine).
1/2" fitting.

PEL
PVDF in-line electrode holder for pH / Redox electrodes with 1/2" or 3/4" thread.
For "T" connection.

NFIL CA
Activated 5" filter with carbon filter cartridge. 6x8 fittings.
With LED light sold as option.

NPED4
Off-line electrode holder for EPH and ERH electrodes.
Epoxy Ø12 casing. Max temperature 50° C, max pressure 5bar with flow sensor, N.O. switch, 6x8 fittings.
With LED light sold as option.

PELC
PVDF in-line electrode holder for pH / Redox electrodes with 1/2" or 3/4" thread.
For saddle connection.

SBR1/20
Amperometric cell for bromine (reading range from 0 to 20 mg/l), pH and temperature compensated.

MIXVN/8
High speed mixer 1400 RPM. AISI shaft-PVC coated, different lengths available (630-730-830-930 mm). Marine impeller, diameter 70mm.

MIXN/8
Slow speed mixer 70/200 RPM. AISI shaft-PVC coated, different lengths available (630-730-830-930 mm). 3-blade impeller, diameter 150mm.

MIXN/MAN
Manual mixer.
PVC shaft, different lengths available (500-600 and 700-800 mm).
Impeller diameter 130 mm.

MIX "PISTON"
Manual mixer.
PVC shaft, different lengths available (500-600 and 700-800 mm).
Impeller diameter 130 mm.

LASP
Suction lances with level control, for tanks up to 25 liters.

LASP
Suction lances with level control, for tanks up to 1000 liters.

LINIR
1/2" injection lance for dosing sodium hypochlorite in hard water. Self cleaning. FKM B o-ring. PVC body.

PVDF INJECTION VALVE
PVDF made injection valve with 1/2" or 3/4" fittings.

Accessories

MF MULTIFUNCTION VALVE
Multifunction valve (pressure, safety, antisyphon and bleed) 1/2” connections for different hoses diameters.
FKM B or EPDM o-ring. PVDF body.

LEVEL PROBE with FOOT FILTER
Level probe with REED TYPER CONTACT. High temperature resistant, not influenced by viscosity, opacity, conductivity or dielectric costant
(0 e 60°C).

CHEMICAL TANKS & SAFETY BUNDS
Chemical tanks made of polyethilene, UV resistant with safety bunds. For dosing pumps and mixers.

CALCIUM HYPOCLORITE DOSING STATIONS
Our chemical tanks can be assembled with:

- 1 Dosing pump (or 2 without mixer) - 1 mixer
- 1 water loading faucet
- 1 outgassing valve
- 1 or 2 suction lances
- 1 water purging faucet
- 2 level probes with filter (without mixer)

Assembling made with two dosing pumps must use a double-suction lance and KDPV kit for connecting both the pumps.

ADVANCED REMOTE MONITORING AND CONTROL SYSTEM

NIMBUS

Online platform for remote control

NIMBUS is an online platform that enables remote monitoring and control of all parameters of compatible EMEC products, allowing interactive management of probes, instrument inputs, product levels, temperature and setpoints.

HOW DOES NIMBUS WORK?

All EMEC instruments equipped with an encoder or touchscreen and an Ethernet or 3G/4G connection are immediately connected and ready for use.

In addition to remote interaction, NIMBUS allows you to receive email notifications regarding alarms and the status of your instruments, based on various configuration options.

ADVANTAGES

- Reduced on-site inspections and maintenance interventions
- Real-time status of network devices (probes, outputs, alarms and setpoints)
- Customisable reports including data from all plant instruments
- Charts, tables and activity logs downloadable to a PC (CSV format)
- Activity scheduling with automatic reminder notifications

COMPATIBLE SYSTEMS

- PRISMA
- CENTURIO PRO /POOL /TOWER
- MTOWER
- WD
- LD / LDS
- WN
- WT
- VELON
- LD OSIN PLUS
- LOTUS

KEY FEATURES

Nimbus has been developed to deliver a complete, intuitive and secure user experience: from interactive plant status visualisation to geolocation, from remote configuration to maintenance planning.

Thanks to advanced reporting tools, role-based access management, and the highest standards of security and data protection, Nimbus supports companies and teams in efficiently monitoring their infrastructure, streamlining daily operations and enhancing overall operational control.

INTUITIVE AND CUSTOMIZABLE DASHBOARD

INTERACTIVE MAP WITH REAL-TIME MONITORING OF SYSTEMS AND DEVICES

BUILT-IN GEOLOCATION FOR ALL YOUR INSTALLATIONS AND DEVICES

GUIDED DEVICE REGISTRATION

REMOTE SETUP AND CONTROL, ANYTIME, ANYWHERE

SMART TEAM MANAGEMENT WITH PROFILED ACCESS LEVELS

INTEGRATED CALENDAR TO PLAN TASKS AND MAINTENANCE

DETAILES, CUSTOMIZABLE REPORTS AT YOUR FINGERTIPS

MULTILINGUAL PLATFORM

SECURE CONNECTION WITH STATE-OF-THE-ART ENCRYPTION

DATA MANAGEMENT IN COMPLIANCE WITH THE HIGHEST SECURITY AND PRIVACY STANDARDS

NIMBUS

Fast, simple and intuitive

YOUR SMART ASSISTANT

A MULTILINGUAL WEB PLATFORM

The user interfa-
ce is available in 34
languages

MULTIPLE ACCESS LEVELS

Multiple users can be added to the system, with different access levels configurable for each plant.

STATUS NOTIFICATIONS PUSH

Set up push notifications on the status of your installations.

EVERYTHING UNDER CONTROL

Real-time display of all your plant parameters and monitoring of the status of all probes

REAL-TIME MANAGEMENT

Real-time management and configuration of all your plant parameters

REAL-TIME CHARTSE

Charts of all your plant parameters, based on both real-time data and stored data

My Emec

All your systems in your hand

www.emecpumps.com
follow us
emec
Notifications
Search
Last Notifications
Alarm
Level Alarm
45 min ago
Warning
Level Warning
45 min ago
All Notifications
Pump status
Off
45 min ago
Warning
Hall sensor warning
45 min ago
Alarm
No input
45 min ago
Pump status
Stand-by
45 min ago
Working mode
Working mode changed to...
45 min ago
Home
Notification
Devices
Documents
Profile
Constant mode
15.00 L/h
50%
100%
10
TO REGISTER THE PUMP ON ERMES OPEN THE 'INFO' MENU (THE FIFTH ICON FROM THE LEFT) AND SCROLL DOWN TO 'ERMES-SERVER.COM'
PRISMA WIFI - EMEC TUTORIAL
emec - simple as water
Iscriviti
0 commenti
Ordina per
Aggiungi un commento...
EMEC Tutorial: PRISMA working modes
EMEC Tutorials
EMEC Brasil
FPV Dosing pump: assembly and handling
EMEC - UNIT STROKE CC/ST CALCULATION VIDEO...
Process of Plywood Making ' How Plywood is manufactured
EMEC: SCL Probe Commissioning
SCL3N AMPEROMETRIC CALIBRATING

emec®
SIMPLE AS WATER

cod. 20211400

EMEC S.r.l. Via Donatori di Sangue, 1 - 02100 Rieti - Italia
T. +39 0746 2284 1 F. +39 0746 2284 2
info@emec.it - www.emecpumps.com