LASP - Suction Lances

Data Sheet

FEATURES

- Level switch (double level probes available)
- Foot valve and foot filter
- Adjustable height
- 1 1/2" pipe fitting
- PVC or PVDF (LASP6) body
- Output (1/2" fitting)
- Up to 2 suction input available
- Lasp4 available also for tank installation

SPECIFICATIONS

MODELS	
LASP4	LASP4 - For pumps up to 10l/h. Fittings 1/2"
LASP5	LASP5 - For pumps from 10 to 140 l/h. Fittings 1/2"
LASP6	LASP6 - PVDF suction lance. For pumps up to 10l/h. Fittings 1/2".

O-RING	
V	FKM B
D	Ethylene Propylene

LENGTH cm	
040	40
063	63
075	75
095	95
108	108
122	122

FITTING AND HOSE	
3	1/2" and 4x6
4	1/2" and 6x8 / 8x12
A	1/2" and 8x10

INPUTS (suction)	
1	1
2	2

LEVEL - CONTACT - CONNECTOR	
0	Level - N.O. contact - BNC
1	Level - N.O. contact - without BNC
4	without level
5	2 levels at 20cm* - BNC
7	2 levels at 20cm* - without BNC
8	2 levels at 10cm* - without BNC
* Specify on order the distance between 2 levels.	

Model LASP4 V 040 3 1 Z 0 3,5 0

FILTER	
0	EMEC filter (LASP3)
1	ILMAP filter (LASP1)

Via Donatori di Sangue, 1 - 02100 Rieti (Italy)
+39 074622841 | emecpumps.com

Specifications subject to change without notice | R2025

emec SIMPLE AS WATER

IQNET CERTIFIED MANAGEMENT SYSTEM

qualityaustria SYSTEM CERTIFIED
ISO 9001:2015 No.07728/0
ISO 14001:2015 No.00997/0
ISO 45001:2018 No.01121/0

LASP - Suction Lances

Data Sheet

DIMENSIONS

OPERATING LENGHT	TANK VOLUME
40 cm	50 lt (mod. CNT PD 50)
63 cm	120 lt (mod. CNT PD 120)
75 cm	250 lt (mod. CNT PD 250)
108 cm	500 lt (mod. CNT PD 500)
122 cm	1000 lt (mod. CNT PD 1000)

LASP5

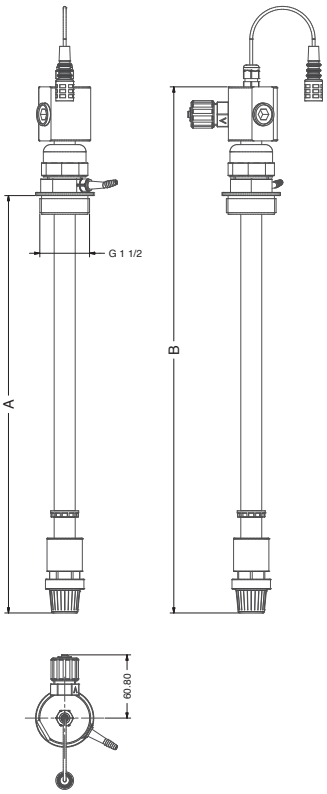

LASP5	
A	B
400	505
630	735
750	855
1080	1185
1220	1345

LASP4

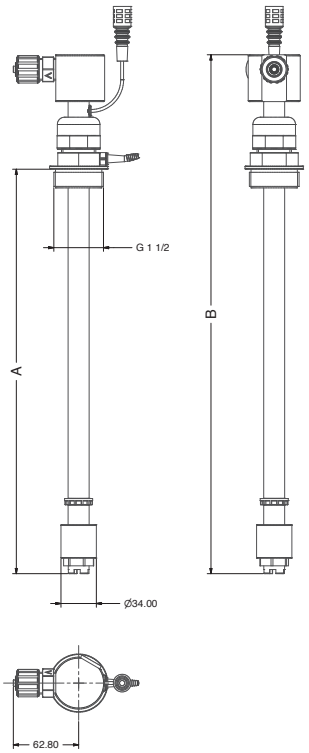

LASP4	
A	B
400	510
630	740
750	860
1080	1190
1220	1330

LASP6

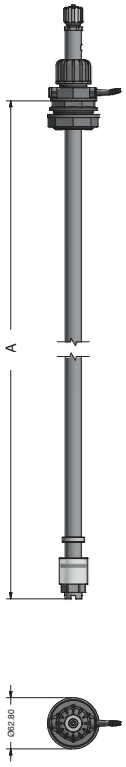

LASP6
A
400
630
750
1080
1220

Via Donatori di Sangue, 1 - 02100 Rieti (Italy)
+39 074622841 | emecpumps.com

Specifications subject to change without notice | R2025

emec SIMPLE AS WATER

IQNET CERTIFIED MANAGEMENT SYSTEM
qualityaustria SYSTEM CERTIFIED
ISO 9001:2015 No.07728/0
ISO 14001:2015 No.00997/0
ISO 45001:2018 No.01121/0

LASP - Suction Lances

Data Sheet

LASP4 tank version

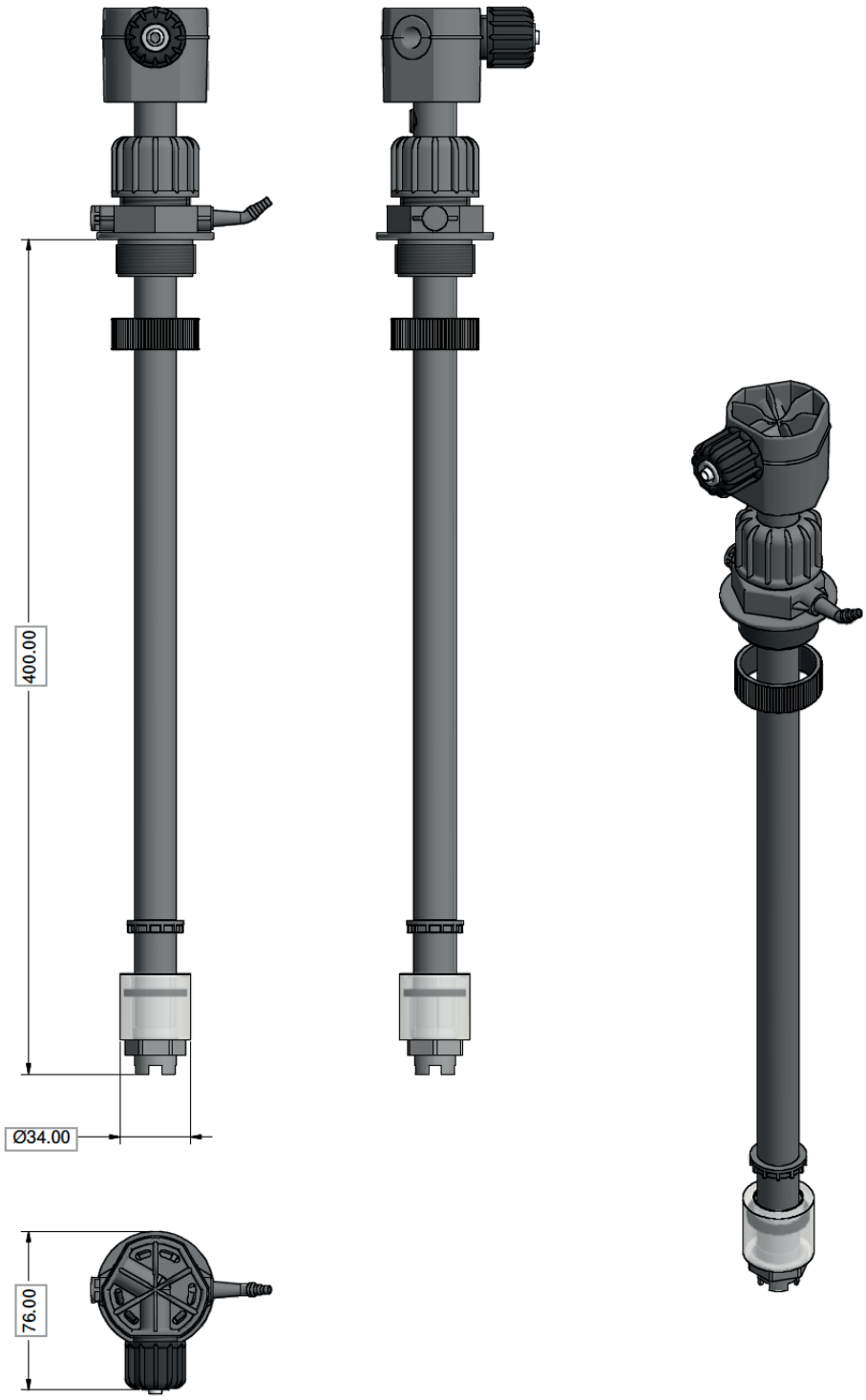

MODELS	Body	O-Ring	Suction fitting	Pipe fitting	Operating length (cm)
LASP4/V [3] **tank**	PVC	FKM B	1/2″ per tubi 4x6	**M38x2**	40 (**LASP4/V40 tank**) 63 (**LASP4/V63 tank**)
LASP4/D [3] **tank**	PVC	EP	1/2″ per tubi 4x6	**M38x2**	40 (**LASP4/D40 tank**) 63 (**LASP4/D63 tank**)

Via Donatori di Sangue, 1 - 02100 Rieti (Italy)
+39 074622841 | emecpumps.com

Specifications subject to change without notice | R2025

emec SIMPLE AS WATER

IQNET CERTIFIED MANAGEMENT SYSTEM
qualityaustria SYSTEM CERTIFIED
ISO 9001:2015 No.07728/0
ISO 14001:2015 No.00997/0
ISO 45001:2018 No.01121/0