"MANIFOLD"

Data Sheet

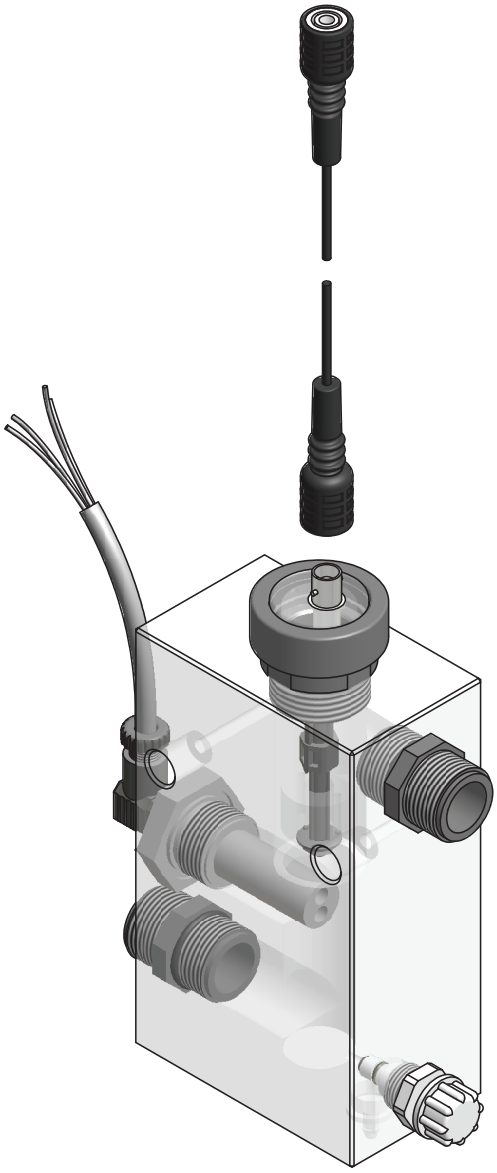

"MANIFOLD/E"

"MANIFOLD/E" with probe holder for ECDCC conductivity probe or for ECDSINDPT conductivity probe. SEFL flow sensor.

Two models available:

MANIFOLD/E/3, 3/4"water input threading,

MANIFOLD/E/1, 1" water input threading.

OPERATIVE PARAMETERS

Max working pressure: 5 bar

Max working temperature: 50°C

Min operative flow: 3/4" models - 140 l/h
1" models - 160 l/h

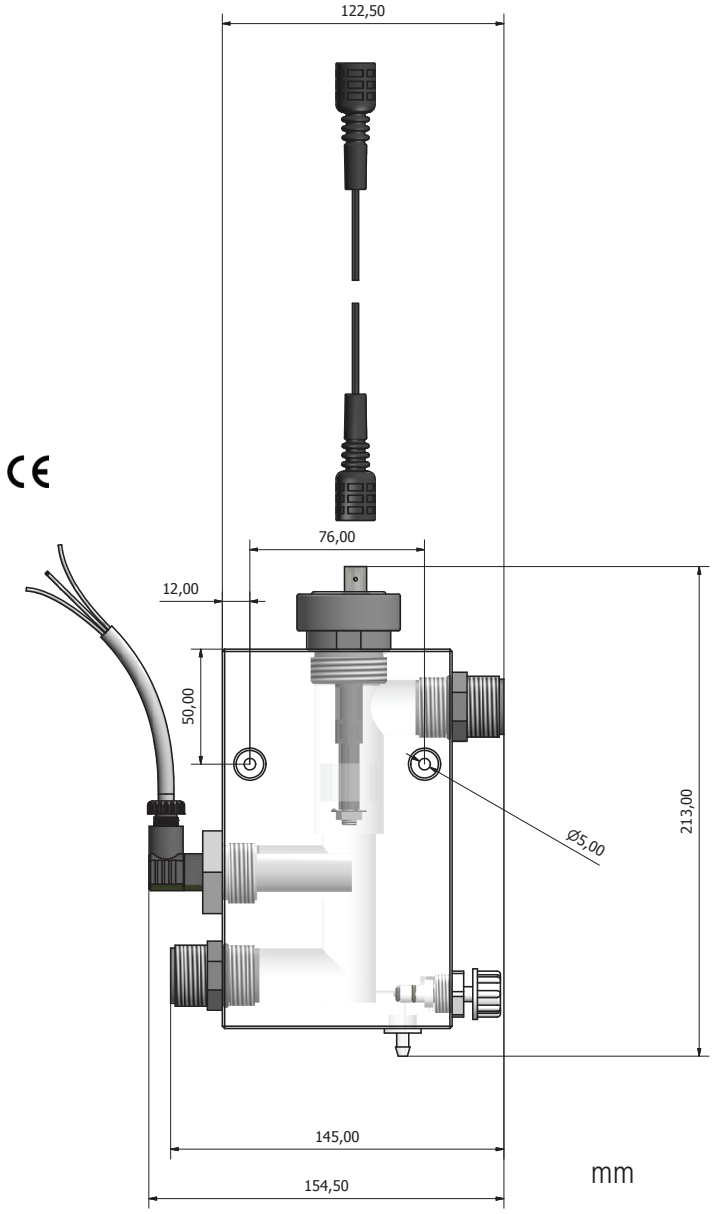

- Best solution for cooling tower environment
- Made of PMMA
- 3/4" or 1" threads
- Sampling water with control knob

Via Donatori di Sangue, 1 - 02100 Rieti (Italy)
+39 074622841 | emecpumps.com

Specifications subject to change without notice | R2025

emec SIMPLE AS WATER

IQNET CERTIFIED MANAGEMENT SYSTEM

qualityaustria SYSTEM CERTIFIED
ISO 9001:2015 No.07728/0
ISO 14001:2015 No.00997/0
ISO 45001:2018 No.01121/0

"MANIFOLD"

Data Sheet

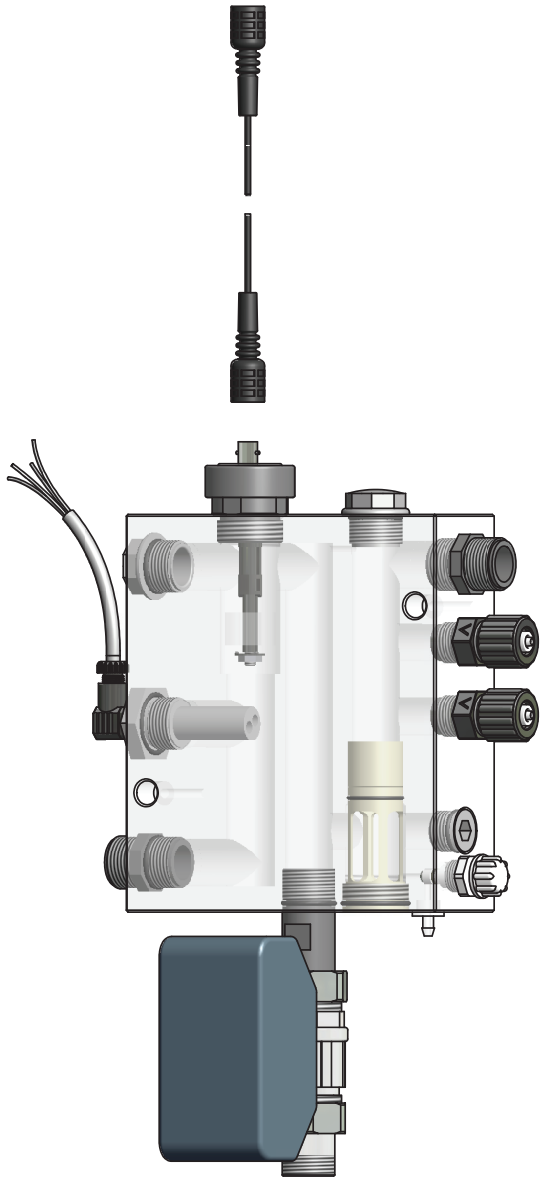

"MANIFOLD" / "MANIFOLD/EV"

"MANIFOLD" with probe holder for ECDCC conductivity probe or for ECDSINDPT conductivity probe. SEFL flow sensor.

2 injection points for dosing pumps and electrovalve (2-way or 3-way) connection with 3/4" thread.

Models available:

MANIFOLD/3, 3/4" water input threading;

MANIFOLD/1, 1" water input threading;

MANIFOLD/EV/3, 3/4" water input threading and motorized valve

MANIFOLD/EV/1, 1" water input threading and motorized valve

OPERATIVE PARAMETERS

Max working pressure: 5 bar

Max working temperature: 50°C

Min operative flow: 3/4" models - 140 l/h

1" models - 160 l/h

CE

- Best solution for cooling tower environment
- Made of PMMA
- 3/4" or 1" thread
- Sampling water with control knob
- Thread size on demand for dosing pumps
- Safety no-return valve for EV activity

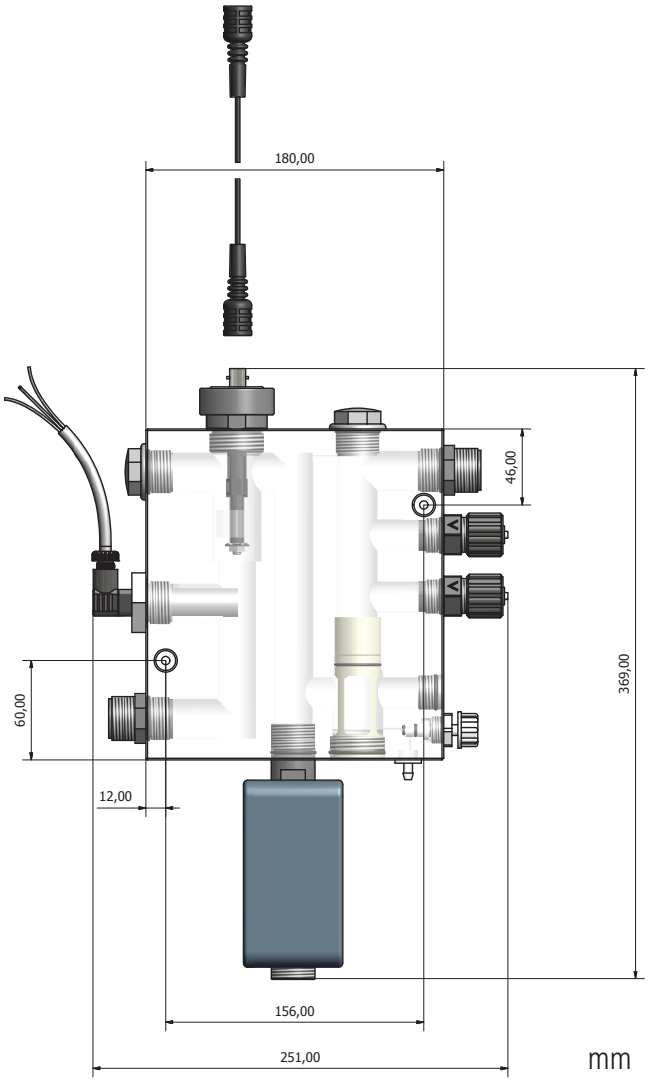

Via Donatori di Sangue, 1 - 02100 Rieti (Italy)
+39 074622841 | emecpumps.com

Specifications subject to change without notice | R2025

emec SIMPLE AS WATER

IQNET CERTIFIED MANAGEMENT SYSTEM

qualityaustria SYSTEM CERTIFIED

ISO 9001:2015 No.07728/0
ISO 14001:2015 No.00997/0
ISO 45001:2018 No.01121/0

"MANIFOLD"

Data Sheet

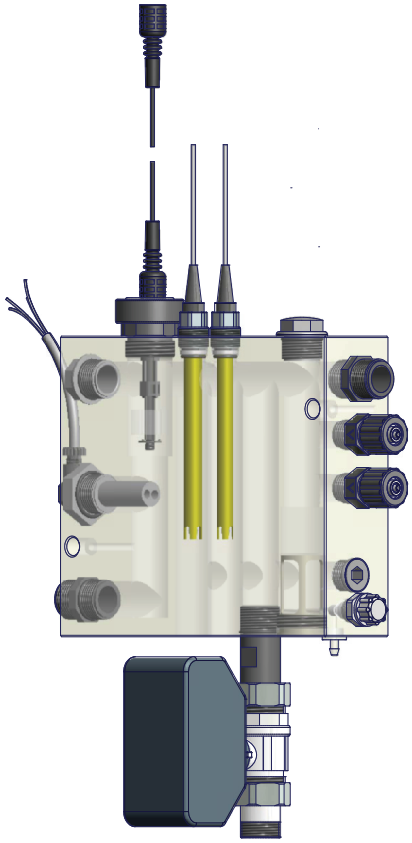

"MANIFOLD PLUS"

"MANIFOLD PLUS" with probe holder for ECDCC conductivity probe or for ECDSINDPT conductivity probe. 2 ∅12 electrodes and SEFL flow sensor.

2 injection points for dosing pumps and electrovalve (2-way or 3-way) connection with 3/4" thread.

Models available:

MANIFOLD PLUS/3, 3/4" water input threading and motorized valve

MANIFOLD PLUS/1, 1" water input threading and motorized valve

OPERATIVE PARAMETERS

Max working pressure: 5 bar

Max working temperature: 50°C

Min operative flow: 3/4" models - 140 l/h

1" models - 160 l/h

- Best solution for cooling tower environment
- Made of PMMA
- 3/4" or 1" thread
- Sampling water with control knob
- Thread size on demand for dosing pumps
- Safety no-return valve for EV activity

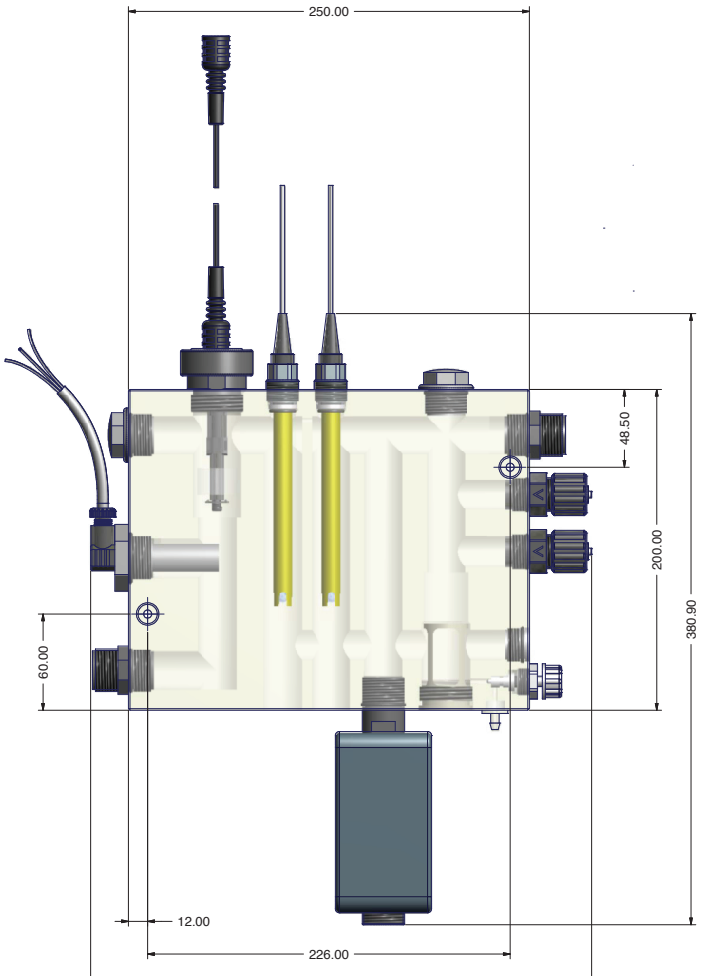

Via Donatori di Sangue, 1 - 02100 Rieti (Italy)
+39 074622841 | emecpumps.com

Specifications subject to change without notice | R2025

emec SIMPLE AS WATER

IQNET CERTIFIED MANAGEMENT SYSTEM

qualityaustria SYSTEM CERTIFIED

ISO 9001:2015 No.07728/0
ISO 14001:2015 No.00997/0
ISO 45001:2018 No.01121/0