TANKS
SAFETY BUNDS

Data Sheet

PE tanks for chemical mixing and dosing system.
With level indicator.

Tanks can be assembled with:
- metering pumps
- suction lances
- mixers
- feed water valve
- outgassing pump hose
- outgassing valve on the higher top side.
- bleed water valve

Dummy holes ensure chemical isolation.
All dosing station components assembled on are enclosed into tank diameter.

Mixers screwed on **thread metal insert** are **tilted** for better central mixing.

Stainless Steel (AISI 316) fixing screws with rubber cap.

OPTION
- Feed water valve (1/2" or 3/4")
- Bleed water valve (1/2" or 1")
- Outgassing valve

Temperature.....0-40° C (32-104°F)
Material.....PE

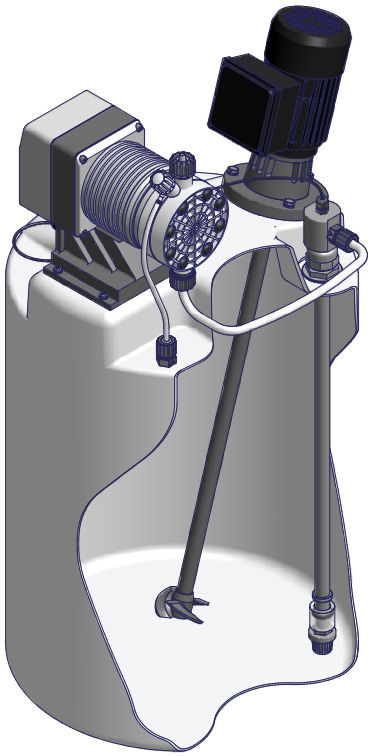

DOSING STATION

Pre-assembled dosing station with:
- 1 metering pump (or 2, if any mixer)
- 1 mixer
- 1 feed water valve
- 1 outgassing valve
- 1 or 2 suction lances
- 1 bleed water valve
- 2 probe filters (if any mixer)

If 2 metering pumps are assembled on, install a suction lance with double suction input and a KDPV connection kit.

The table below lists EMEC components you can choose for dosing station.

Tank model	Metering pump (mod.)	Mixer (mod.)	Suction lance
CNT50	• V (with bracket) • K	• MIX MAN	• LASP4 (40 cm) • LASP5 (40 cm)
CNT110	• V (with bracket) • K • A • T (with bracket)	• MIX8N • MIXV8N	• LASP4 (63 cm) • LASP5 (63 cm)
CNT200 *	• V (with bracket) • K • A • T (with bracket)	• MIX8N • MIXV8N • MIX4N • MIXV4N • MIXV2N	• LASP4 (75 cm) • LASP5 (75 cm)
CNT500 *	• V (with bracket) • K • A • T (with bracket)	• MIX8N • MIXV8N • MIXV4N • MIX4N • MIXV2N	• LASP4 (108 cm) • LASP5 (108 cm)
CNT1000	• V (with bracket) • K • A • T (with bracket)	• MIX4N • MIXV2N • MIX2	• LASP4 (120 cm) • LASP5 (120 cm)

* Models set for 2 suction lances.

Via Donatori di Sangue, 1 - 02100 Rieti (Italy)
+39 074622841 | emecpumps.com

Specifications subject to change without notice | R2025

emec SIMPLE AS WATER

IQNET CERTIFIED MANAGEMENT SYSTEM
qualityaustria SYSTEM CERTIFIED
ISO 9001:2015 No.07728/0
ISO 14001:2015 No.00997/0
ISO 45001:2018 No.01121/0

DIMENSIONS

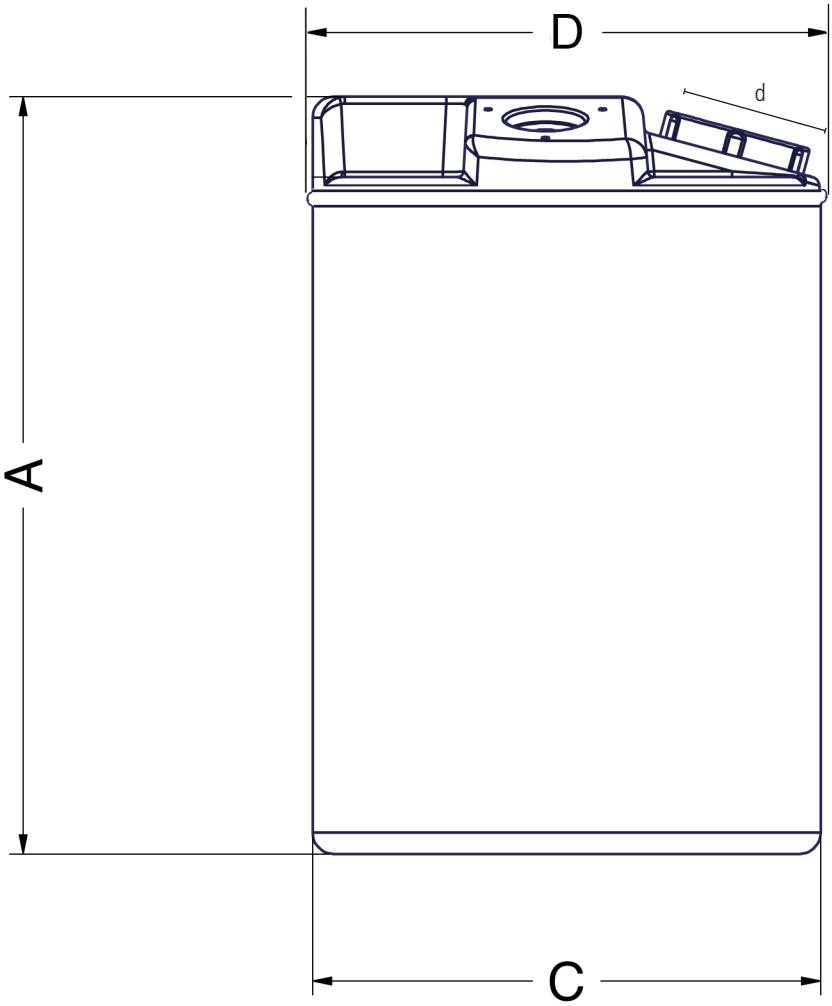

Model	Litres	A	C	D
CNT50	50	505	⌀ 420	-
CNT110	110	735	⌀ 495	⌀ 505
CNT200	200	850	⌀ 610	-
CNT500	500	1200	⌀ 780	-
CNT1000	1000	1240	⌀ 1120	-

Measures in mm.

HOLES DIMENSIONS

Model	Chemical load (d)	Feed water valve	Bleed water valve	Outgassing valve	Suction lance	Pump outgas-sing hose
CNT50	95 mm	1/2″ filettato	1/2″ filettato	1/2″ filettato	1 1/2″ filettato	1/2″ 4x6
CNT110	120 mm	1/2″ filettato	1/2″ filettato	1/2″ filettato	1 1/2″ filettato	1/2″ 4x6
CNT200	120 mm	1/2″ filettato	1/2″ filettato	1/2″ filettato	1 1/2″ filettato	1/2″ 4x6
CNT500	150 mm	1″ filettato	1″ filettato	1/2″ filettato	1 1/2″ filettato	1/2″ 4x6
CNT1000	260 mm	1″ filettato	1″ filettato	1/2″ filettato	1 1/2″ filettato	1/2″ 4x6

Via Donatori di Sangue, 1 - 02100 Rieti (Italy)
+39 074622841 | emecpumps.com

Specifications subject to change without notice | R2025

emec SIMPLE AS WATER

IQNET CERTIFIED MANAGEMENT SYSTEM
qualityaustria SYSTEM CERTIFIED
ISO 9001:2015 No.07728/0
ISO 14001:2015 No.00997/0
ISO 45001:2018 No.01121/0

TANKS
SAFETY BUNDS

Data Sheet

PE safety bunds for "CNT" tanks.

Reinforced collar for increasing security.

Temperature.....0-40° C (32-104°F)
Material.....PE

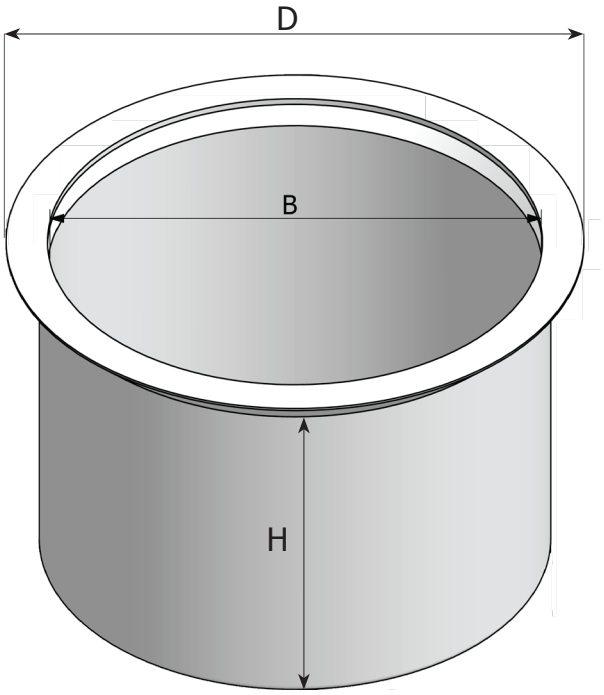

Model	Litres	D	B	H	Tank model
COS50	60	510	430	425	CNT50
COS110	120	545	520	615	CNT120
COS200	300	695	660	875	CNT250
COS500	600	840	820	1095	CNT500
COS1000	1500	1240	1150	1250	CNT1000

Measures in mm.

Via Donatori di Sangue, 1 - 02100 Rieti (Italy)
+39 074622841 | emecpumps.com

Specifications subject to change without notice | R2025

emec SIMPLE AS WATER

IQNET CERTIFIED MANAGEMENT SYSTEM
qualityaustria SYSTEM CERTIFIED
ISO 9001:2015 No.07728/0
ISO 14001:2015 No.00997/0
ISO 45001:2018 No.01121/0