LINI - INJECTION LANCES

Datasheet

R311125

MAIN FEATURES

- Reduces chemical deposits and crystalline formation at the injection point.
- PVDF, PP, or stainless steel body.
- Extension available upon request for all models in 3 lengths: 5 cm, 10 cm, and 15 cm.

MODELS

LINI-V / LINI-D

LINI 1/2 PP LINI 3/4

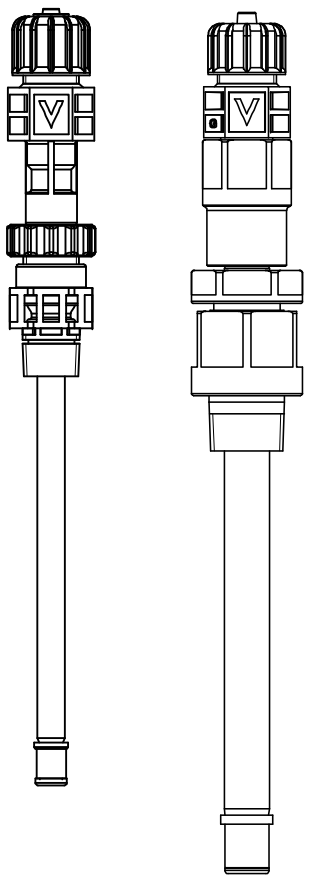

Injection Lances 1/2"

	LINI-D
Connections	1/2"
Max pressure	16 bar (2 bar)
Max temperature	25°C (130°C)
Max flow	10 l/h
Body	PP
O-Rings	EPDM

Injection Lances 3/4"

	LINI-V	LINI-D
Connections	1"	1"
Max pressure	10 bar (2 bar)	10 bar (2 bar)
Max temperature	25°C (110°C)	25°C (110°C)
Max flow	120 l/h	120 l/h
Body	PVDF	PP
O-Rings	FKM B	EPDM

LINIR - INJECTION LANCES

Data Sheet

LINIR-V / LINIR-D

1/2" injection lance with ball valve (ceramic balls) for removing injection valves with the pipeline under pressure.

	LINIR-V	LINIR-D
Connections	1/2″	1/2″
Max pressure	16 bar (3 bar)	16 bar (3 bar)
Max temperature	25°C (50°C)	25°C (50°C)
Max flow	10 l/h	10 l/h
Body	PVDF	PP
Faucet	PVC	PVC
O-Rings	FKM B	EPDM

LINIR 1/2 PP

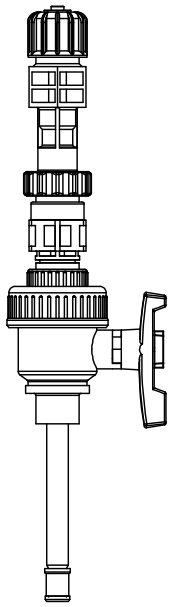

LINIR 3/4

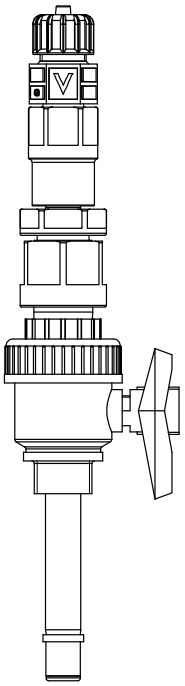

LINIR-V / LINIR-D

3/4" injection lance with ball valve (ceramic balls) for removing injection valves with the pipeline under pressure.

	LINIR-V	LINIR-D
Connections	1″	1″
Max pressure	10 bar (3 bar)	10 bar (3 bar)
Max temperature	25°C (50°C)	25°C (50°C)
Max flow	120 l/h	120 l/h
Body	PVDF	PVDF
Faucet	PVC	PVC
O-Rings	FKM B	EPDM

LINIR-K

Lancia di iniezione da 1/2" con rubinetto a sfera in PVDF (biglie in ceramica) per effettuare la rimozione delle valvole d'iniezione con la tubazione in pressione.

	LINIR-K
Connections	1/2″
Max pressure	16 bar (2 bar)
Max temperature	25°C (110°C)
Max flow	10 l/h
Body	PVDF
Faucet	PVDF
O-Rings	FKM B

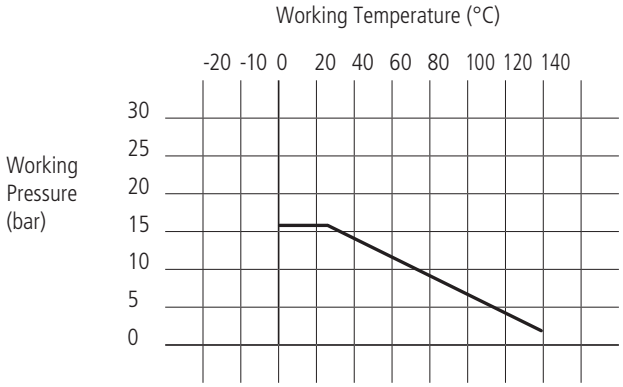

LINIR-K

LINIR-K

3/4" injection lance with PVDF ball valve (ceramic balls) for removing injection valves with the pipeline under pressure.

	LINIR-K
Connections	1″
Max pressure	10 bar (2 bar)
Max temperature	25°C (110°C)
Max flow	120 l/h
Body	PVDF
Faucet	PVDF
O-Rings	FKM B / EPDM

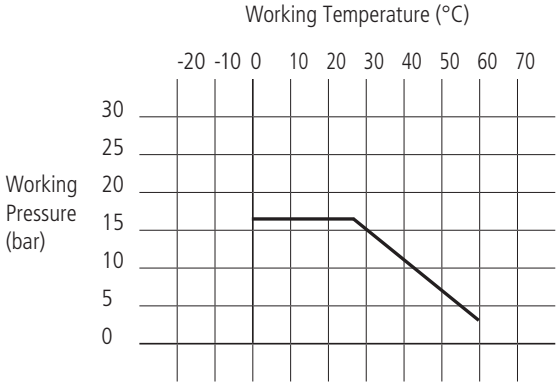

LINIR-V / LINIR-D

Via Donatori di Sangue, 1 - 02100 Rieti (Italy)
+39 074622841 | emecpumps.com

Specifications subject to change without notice | R2025

emec SIMPLE AS WATER

IQNET CERTIFIED MANAGEMENT SYSTEM
qualityaustria SYSTEM CERTIFIED
ISO 9001:2015 No.07728/0
ISO 14001:2015 No.00997/0
ISO 45001:2018 No.01121/0

LINI-SS

Stainless steel injection lance (stainless steel balls) for removing injection valves with the pipeline under pressure.

	LINI-SS-V	LINI-SS-D
Connections	1/2″	1/2″
Max pressure	25 bar	25 bar
Max temperature	200°C	150°C
Max flow	10 l/h	10 l/h
Body	SS	SS
O-Rings	FKM B	EPDM

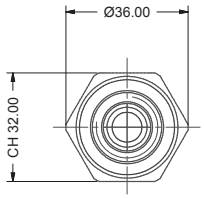

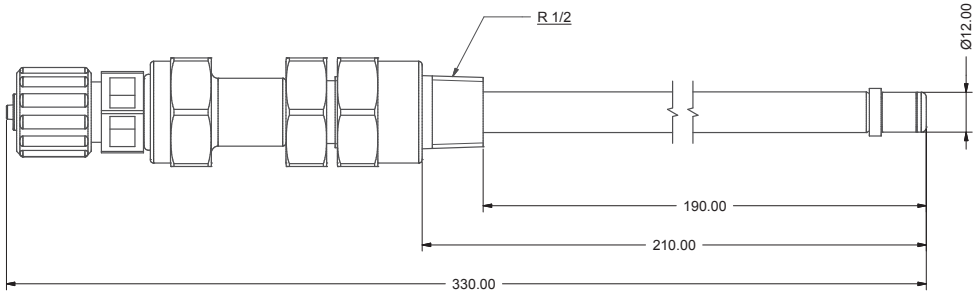

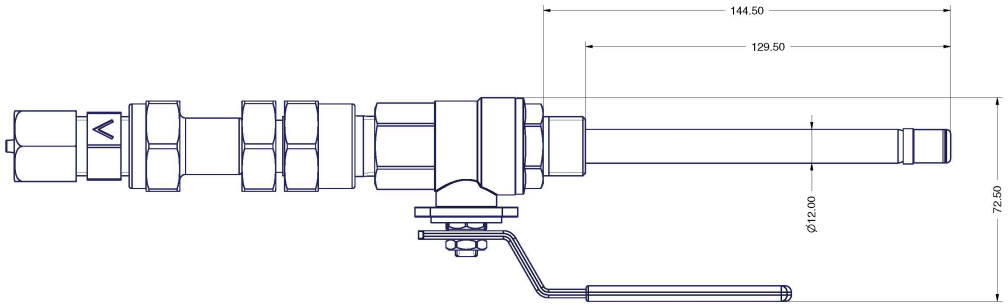

LININ / LININR- INJECTION LANCES

Data Sheet

Injection Lances 1/2"

	LININ	LININR
Connections	1/2"	1/2"
Max pressure	25 bar (2 bar)	16 bar (3 bar)
Max temperature	25°C (130°C)	25°C (50°C)
Max flow	10 l/h	10 l/h
Body	PVDF	PVDF
O-Rings	FKM B	FKMB

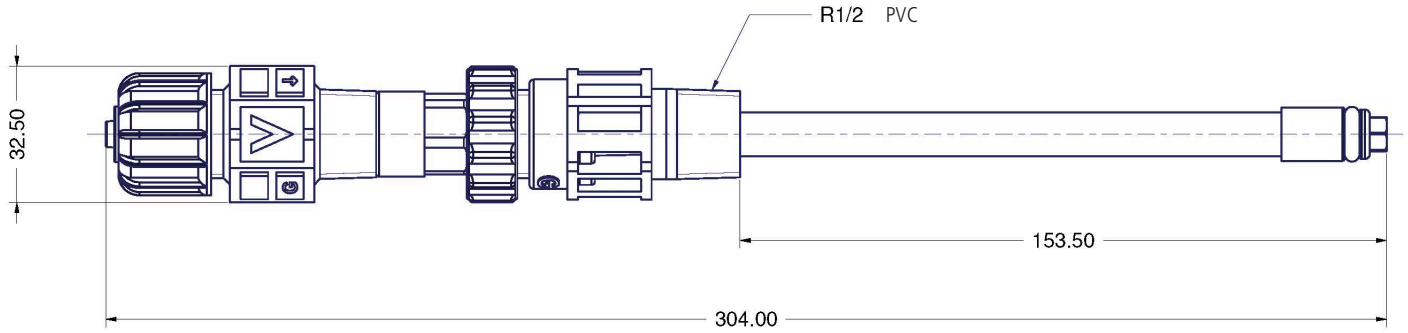

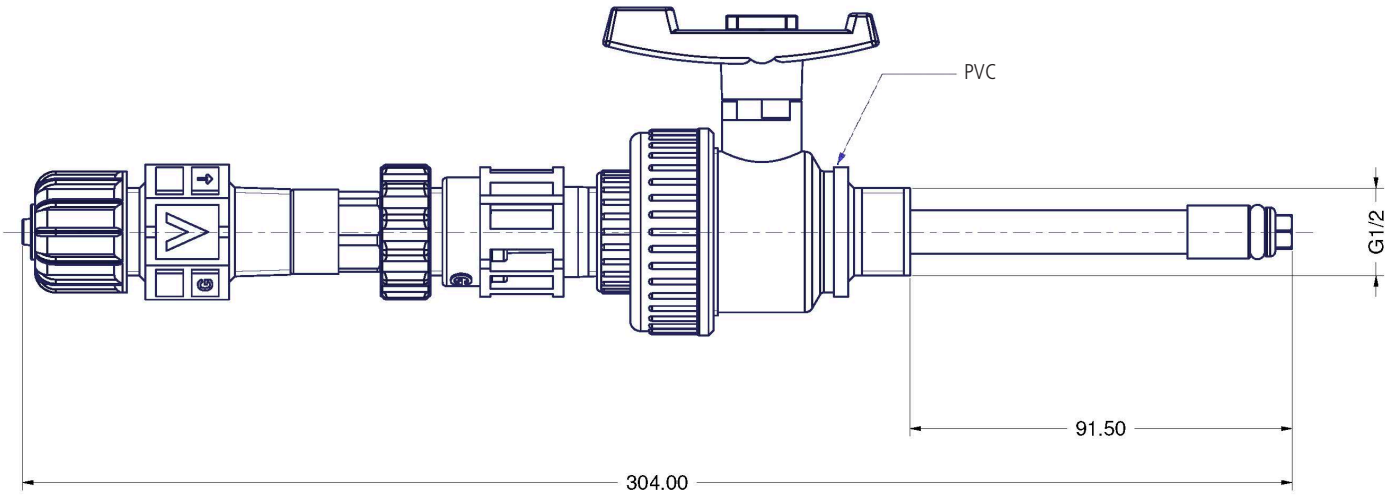

Via Donatori di Sangue, 1 - 02100 Rieti (Italy)
+39 074622841 | emecpumps.com

Specifications subject to change without notice | R2025

emec SIMPLE AS WATER

IQNET CERTIFIED MANAGEMENT SYSTEM

qualityaustria SYSTEM CERTIFIED
ISO 9001:2015 No.07728/0
ISO 14001:2015 No.00997/0
ISO 45001:2018 No.01121/0

INSTALLATION

FIG. 1.

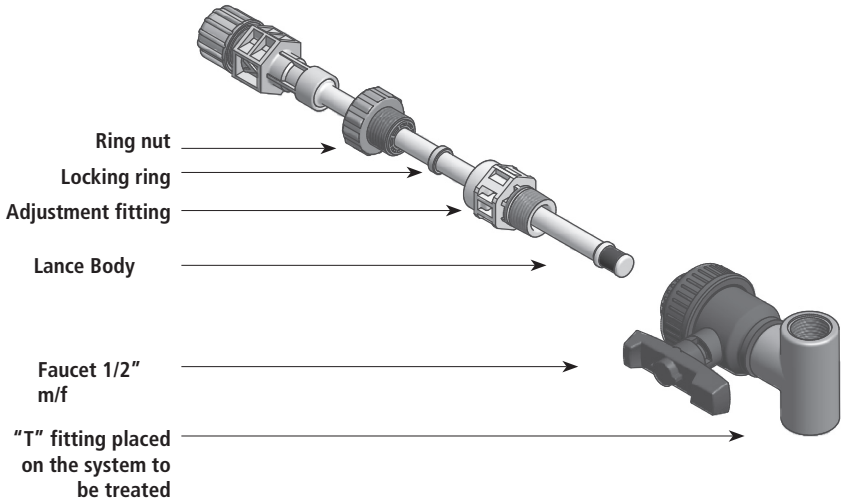

- - Prepare the injection lance as shown in Figure 1.

- - Insert the lance body into the closed tap. Tighten the nut. Pay attention to the watertightness of the connection and, if necessary, use hydraulic insulation material.

- - Open the tap and push the lance body all the way down until the "T" fitting is inserted halfway up (Figure 2).

- - Firmly tighten the ring on the nut as shown in Figure 2 to prevent the lance from being expelled by the water pressure.

FIG. 2.

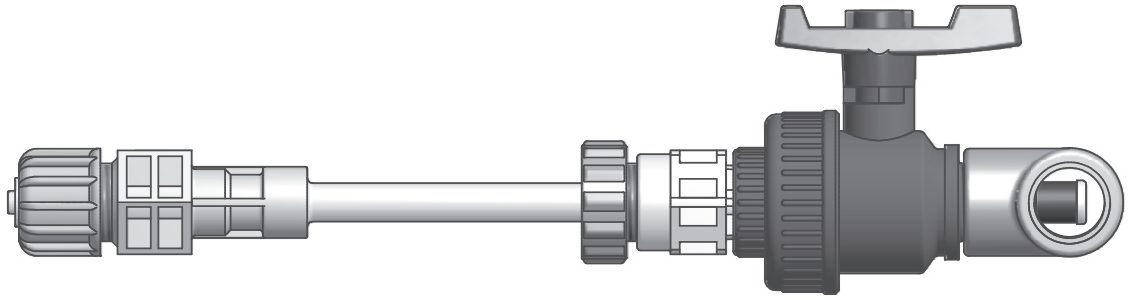

INSTALLATION

FIG. 1.

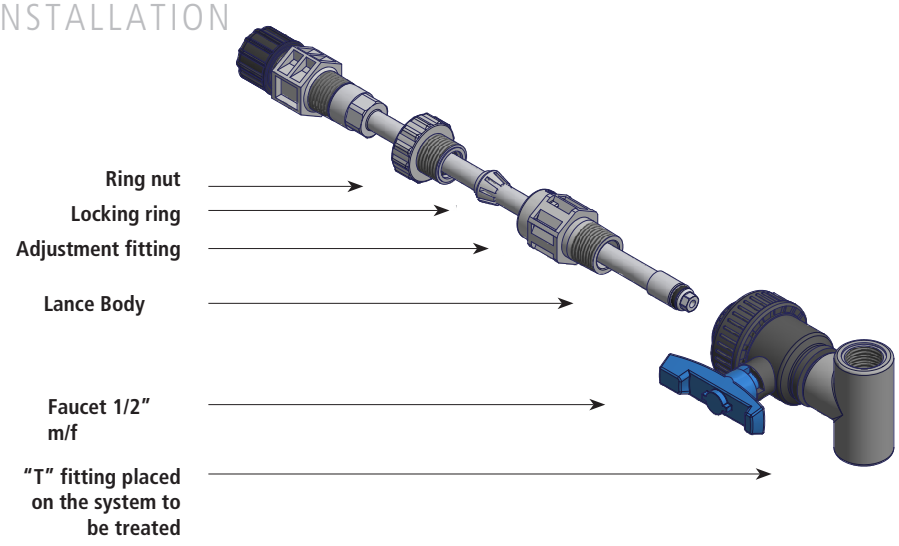

- - Prepare the injection lance as shown in Figure 1.

- - Insert the lance body into the closed tap. Tighten the nut. Pay attention to the watertightness of the connection and, if necessary, use hydraulic insulation material.

- - Open the tap and push the lance body all the way down until the "T" fitting is inserted halfway up (Figure 2).

- - Firmly tighten the ring on the nut as shown in Figure 2 to prevent the lance from being expelled by the water pressure.
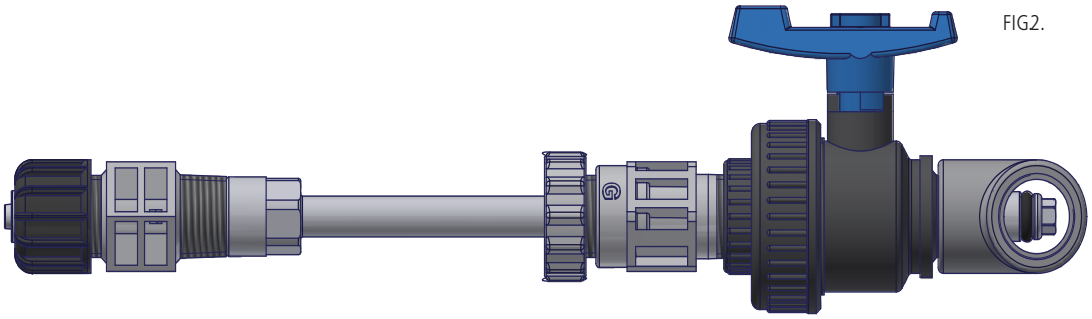
FIG2.