R990525

LASP

LASP4

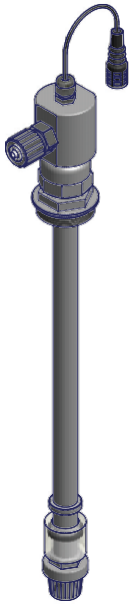

LASP5

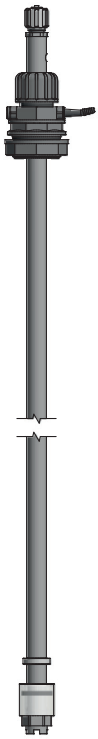

LASP6

EN

OPERATING MANUAL

SUCTION LANCES

This operating instructions contains safety information that if ignored can endanger life or result in serious injury.

Read these instructions **carefully** before use and keep them for future reference.

Information and specifications on this manual could be uncorrect or could have printing errors. Specifications are subject to change without notic .

Version: EN R2-02-25

SUCTION LANCE IS USED IN DRINKING WATER TREATMENT.

Do not use with radioactive chemicals.
Do not use with flammable chemicals.

When using pump with aggressive chemicals observe the regulations concerning the transport and storage of aggressive fluids.

Manufacturer is not liable for any unauthorized use or misuse of this product that may cause injury, damage to persons or materials.

When installing always observe national regulations.

Before any operation:
- **always read chemical Material Safety Data Sheet (MSDS);**
- **always wear protective clothing;**
- **always discharge the liquid end before servicing the pump.**
- **empty and rinse the liquid end before work on a pump which has been used with hazardous or unknown chemicals.**

Descrizione Prodotto *Product Description*	Lancia d'aspirazione, serie LASP *Suction lance, LASP series*
Codici Identificativi Prodotto (i simboli "_" completano il codice del prodotto in base alla configurazione delle varianti) *Product Identification Codes* *(the "_" symbols complete the product code based on the configuration of the variants)*	**LASP4** _ _ _ _ _ _ _ _ _ _ _ _ _ _ _ **LASP5** _ _ _ _ _ _ _ _ _ _ _ _ _ _ _ **LASP6** _ _ _ _ _ _ _ _ _ _ _ _ _ _ _ **LASPM** _ _ _ _ _ _ _ _ _ _ _ _ _ _ _
Numero di Serie *Serial Number*	Si veda l'etichetta sul prodotto *See the label on the product*

INTRODUCTION

The suction lance is a device for the suction of chemical product from the storage tank.
It is available in different sizes depending on the tank.

FEATURES

- Level probe for end product pre-alarm signal. lASP4 model is available with double level probe.
- Suction valve with foot filter.
- Adjustable height system
- 1 1/2" pipe fitting
- Output (1/2" fitting)
- Up to 2 suction input available

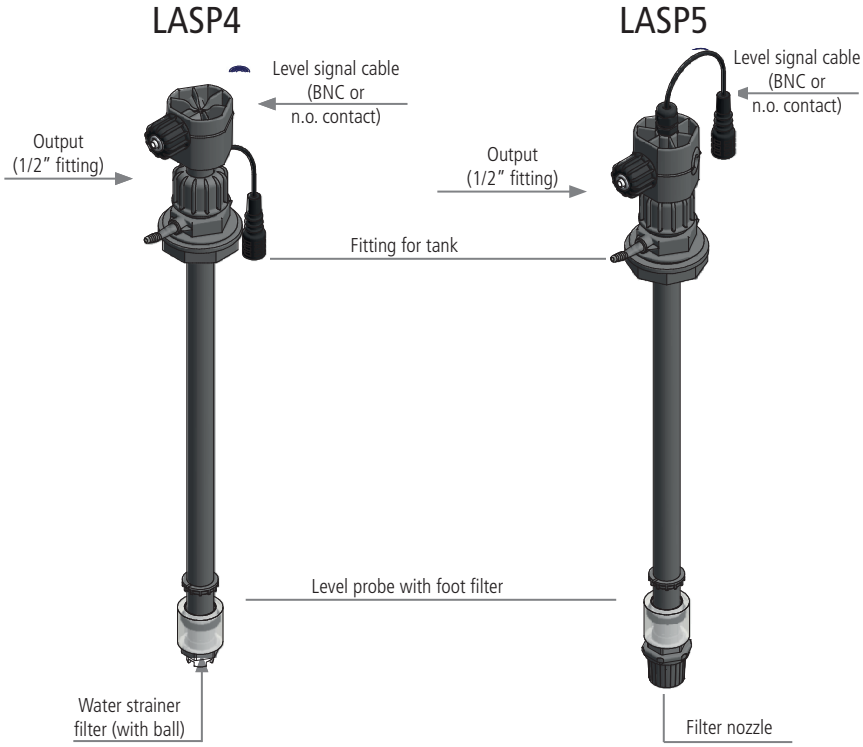

INSTALLATION

1. To install LASP on tank insert it in the through-hole and screw the counter nut.
If the LASP is ordered together with the tank, the counter nut is not present: screw the LASP on the threading on tank after removing the collar nut.

LASP must be installed at 5 cm from the bottom.

Fig. 1. Installation on tank.

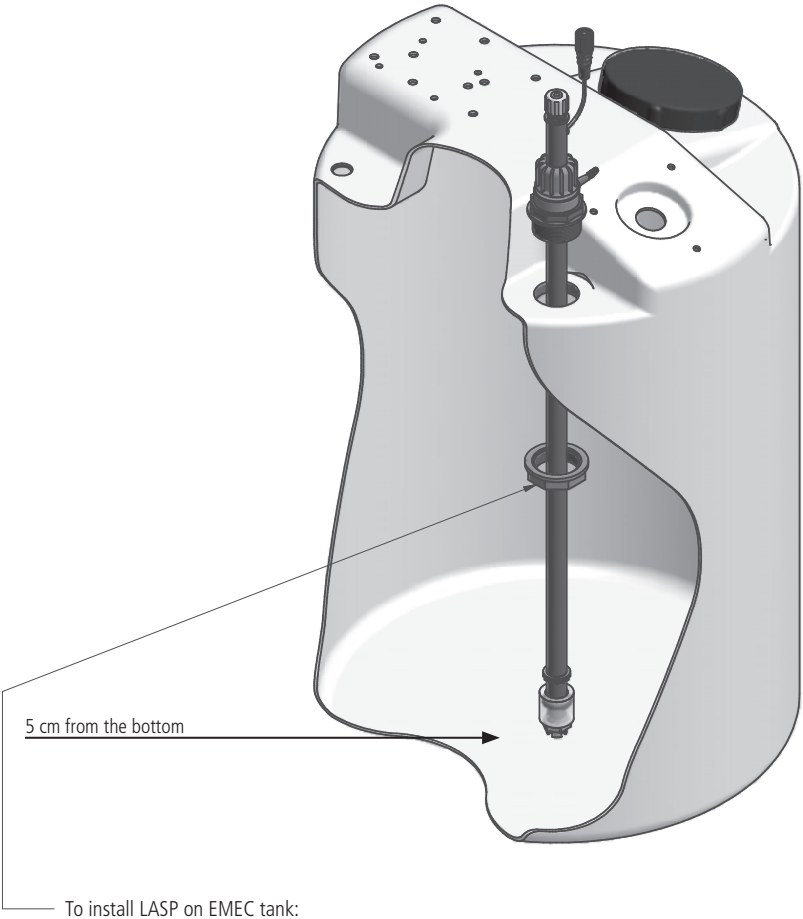

To install LASP on EMEC tank:
1. remove 1 1/2" counter nut and screw the LASP on the tank.

For other tanks:
1. prepare a through-hole of 50 cm diameter;
2. remove 1 1/2" counter nut;
3. insert LASP in the through-hole;
4. screw the 1 1/2" counter nut on the LASP.

Fig. 2. Installation on plastic drums (small size).

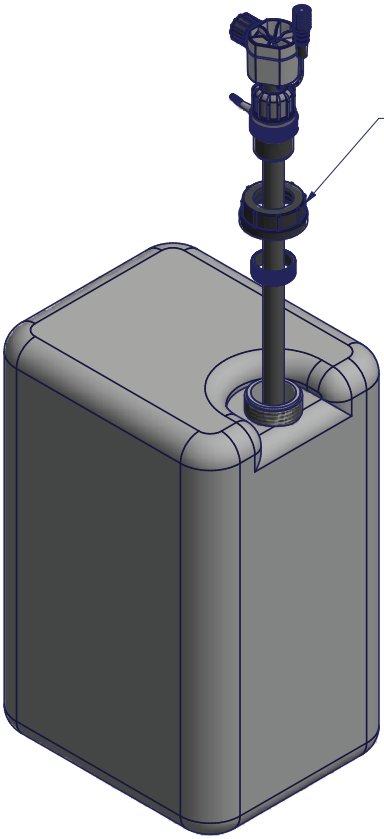

LASP4 with adjustment 38 Pitch 2 on small size drum:

1. prepare a through-hole of 38.5 cm diameter on the cap;
2. remove 1 1/2” counter nut;
3. insert the LASP in the cap through-hole;
4. insert and screw the 1 1/2” counter nut;
5. screw the cap on the tank.

5 cm from the bottom

2. Connect pump suction hoss to LASP output (1/2" fitting).

Fig. 3. Hose assemby.

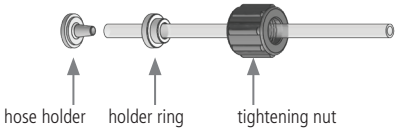

3. Connect BNC level signal cable to BNC level on metering pump.
If there are two level signal cable connect the second to an instrument or PLC.

Fig. 4. LASP connections.

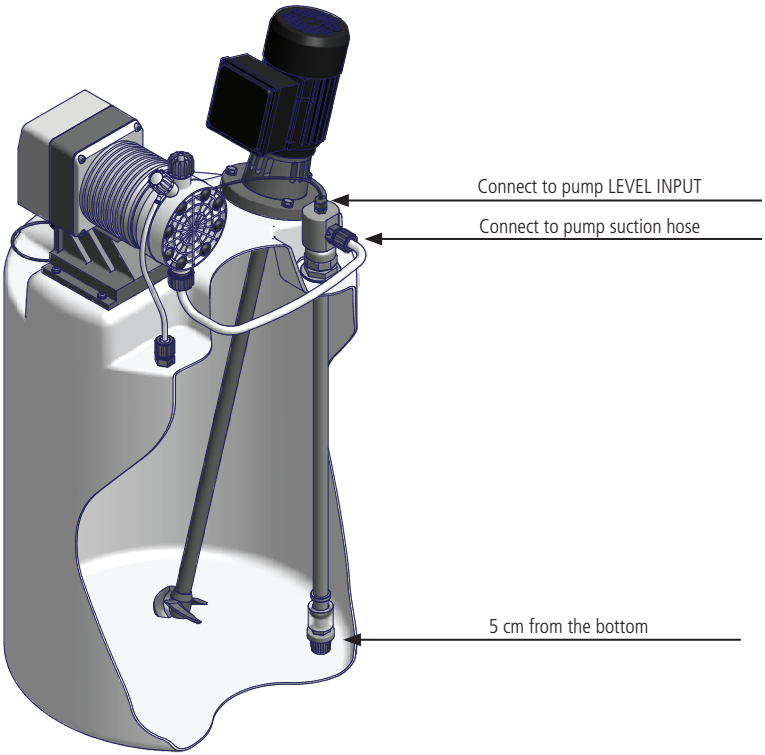

LASP4

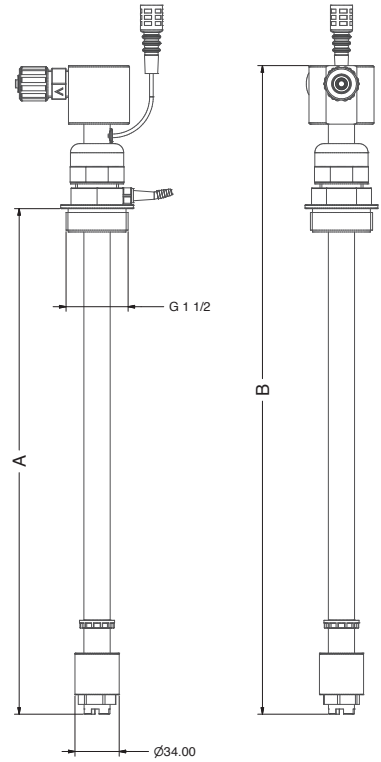

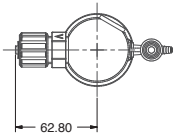

CNT SUITABLE

CNT PD50 (50 litri)
CNT PD110 (110 litri)
CNT PD200 (200 litri)
CNT PD500 (500 litri)
CNT PD1000 (1000 litri)

DIMENSIONS

Dimensions: mm

LASP5

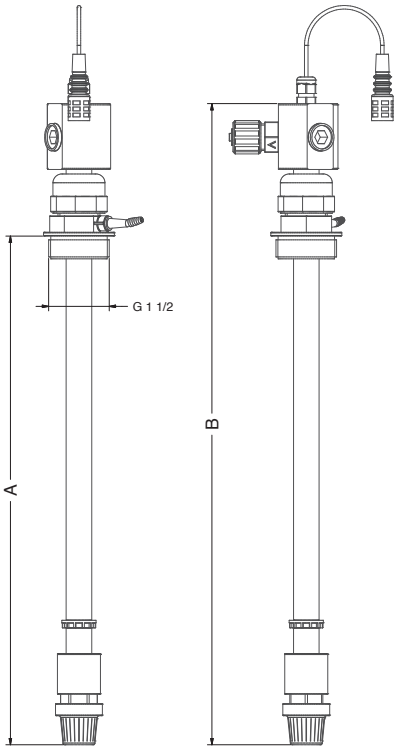

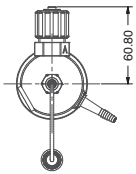

CNT SUITABLE

CNT PD50 (50 litri)
CNT PD110 (110 litri)
CNT PD200 (200 litri)
CNT PD500 (500 litri)
CNT PD1000 (1000 litri)

MAINTENANCE

OPERATOR PROTECTION

Use safety equipment according to the company regulations.
Use this safety equipment within the work area during installation, service and when handling chemicals:

- protective mask
- protective gloves
- safety goggles
- ear plugs or hear muffs
- further security device, if necessary.

POWER SUPPLY DISCONNECTION

Always disconnect power to the motor before you perform any installation or maintenance tasks. Failure to disconnect power will result in serious physical injury.

Installation and maintenance tasks should be carried out by AUTHORIZED AND QUALIFIED PERSONNEL only in accordance with local regulations.

Use original spare parts.

1. Arrestare la pompa ed eventuali apparecchiature presenti sul serbatoio prima di ogni intervento di manutenzione. Shutdown the dosing pump and all devices on the tank before any maintenance operation or before long downtimes.

2. Disconnect power and ensure it cannot be restarted.

Depressurize the system. The liquid may leak splashing.

3. Drain the chemical from pump head and hoses.

4. Unscrew LASP and pull it out of tank.

5. LASP4: unscrew the bottom filter paying attention to the ceramic ball inside.
   Wash filter to remove deposit and crystals.
   LASP5: pull filter nozzle and proceed to backwash with water.

LASP - Suction Lances

Data Sheet

FEATURES

- Level switch (double level probes available)
- Foot valve and foot filter
- Adjustable height
- 1 1/2" pipe fitting
- PVC or PVDF (LASP6) body
- Output (1/2" fitting)
- Up to 2 suction input available
- Lasp4 available also for tank installation

SPECIFICATIONS

MODELS	
LASP4	LASP4 - For pumps up to 10l/h. Fittings 1/2"
LASP5	LASP5 - For pumps from 10 to 140 l/h. Fittings 1/2"
LASP6	LASP6 - PVDF suction lance. For pumps up to 10l/h. Fittings 1/2".

O-RING	
V	FKM B
D	Ethylene Propylene

LENGTH cm	
040	40
063	63
075	75
095	95
108	108
122	122

FITTING AND HOSE	
3	1/2" and 4x6
4	1/2" and 6x8 / 8x12
A	1/2" and 8x10

INPUTS (suction)	
1	1
2	2

LEVEL - CONTACT - CONNECTOR	
0	Level - N.O. contact - BNC
1	Level - N.O. contact - without BNC
4	without level
5	2 levels at 20cm* - BNC
7	2 levels at 20cm* - without BNC
8	2 levels at 10cm* - without BNC
* Specify on order the distance between 2 levels.	

Model LASP4 V 040 3 1 Z 0 3,5 0

FILTER	
0	EMEC filter (LASP3)
1	ILMAP filter (LASP1)

DIMENSIONS

OPERATING LENGHT	TANK VOLUME
40 cm	50 lt (mod. CNT PD 50)
63 cm	120 lt (mod. CNT PD 120)
75 cm	250 lt (mod. CNT PD 250)
108 cm	500 lt (mod. CNT PD 500)
122 cm	1000 lt (mod. CNT PD 1000)

LASP5

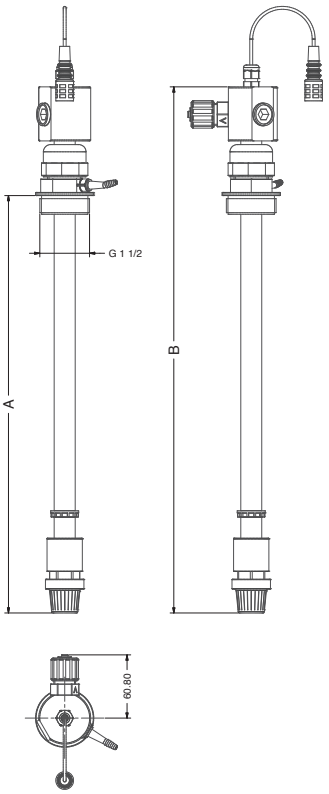

LASP4

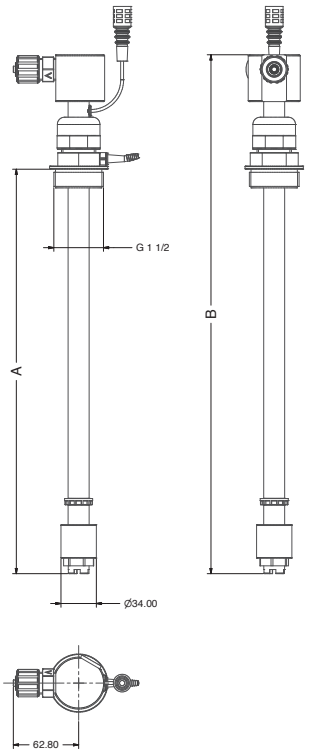

LASP6

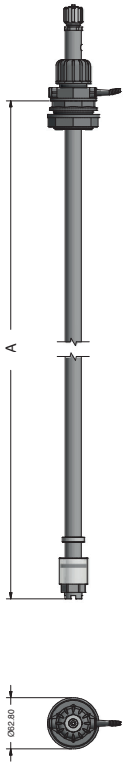

LASP5	
A	B
400	505
630	735
750	855
1080	1185
1220	1345

LASP4	
A	B
400	510
630	740
750	860
1080	1190
1220	1330

LASP6
A
400
630
750
1080
1220

LASP4 tank version

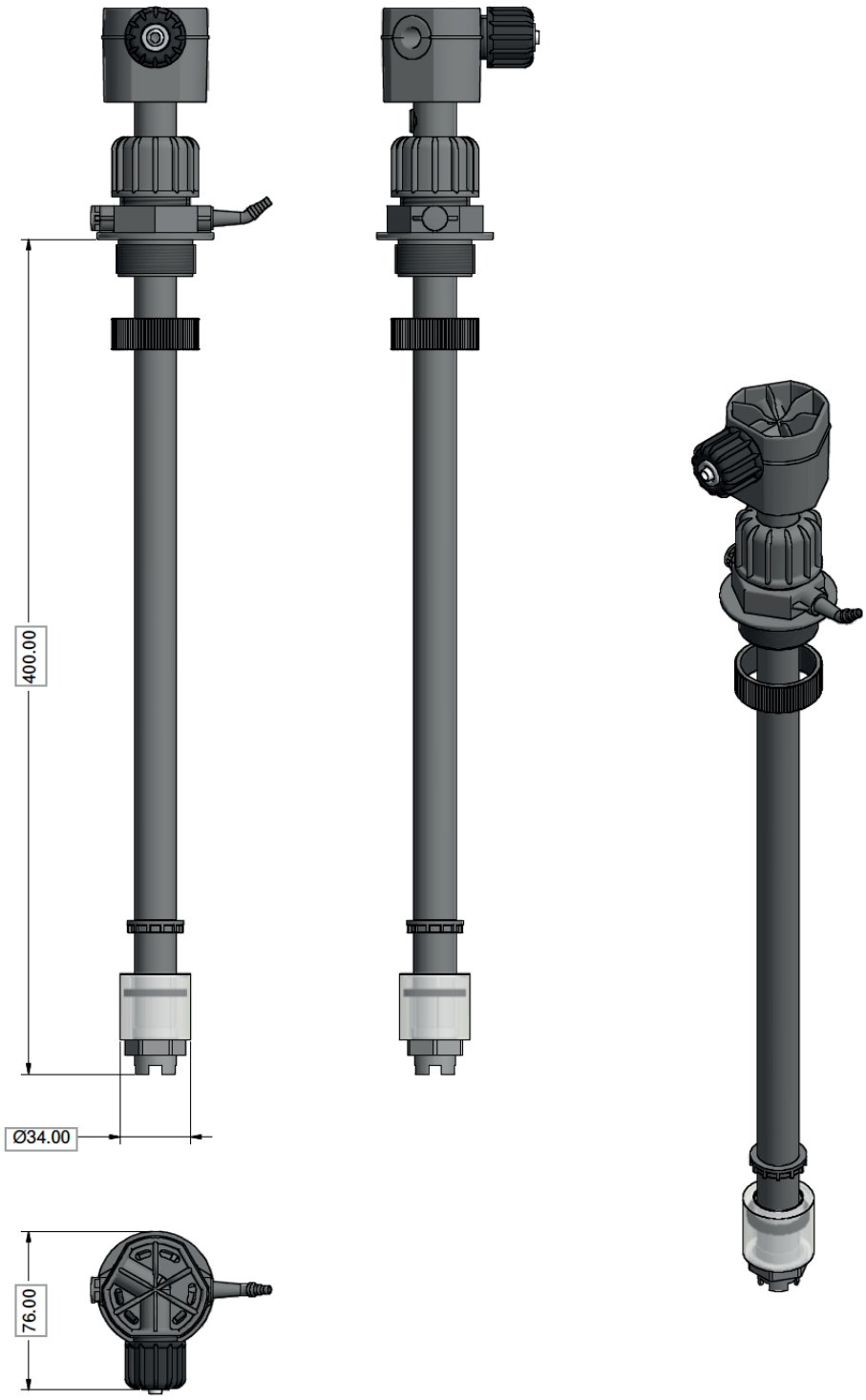

MODELS	Body	O-Ring	Suction fitting	Pipe fitting	Operating length (cm)
LASP4/V [3] **tank**	PVC	FKM B	1/2″ per tubi 4x6	**M38x2**	40 (**LASP4/V40 tank**) 63 (**LASP4/V63 tank**)
LASP4/D [3] **tank**	PVC	EP	1/2″ per tubi 4x6	**M38x2**	40 (**LASP4/D40 tank**) 63 (**LASP4/D63 tank**)

PRECAUTIONS RELATED TO DIRECTIVES, REGULATIONS AND RULES

§ Marking EC/EU and UKCA

EMEC Ltd. guarantees That This product satisfies the requirements essential from the Directives And of the Regulations applicable in reason from the following specifications. Take carefully in consideration the following Specifications For the use of the produced in European Union member countries and in the United Kingdom.

• Directives And rules harmonized EC/EU

Directives
DIRECTIVE 2014/30/EU
DIRECTIVE 2011/65/EU
DIRECTIVE DELEGATED (EU) 2015/863

Rules harmonized
EN ISO 12100
EN IEC 61326-1
EN IEC 63000

• Regulations And rules harmonized UKCA

Regulations
2008 2016 No. 1091
2012 No. 3032

Rules harmonized
BS EN ISO 12100
BS EN IEC 61326-1
BS EN IEC 63000

§ Other conformity

Decree of 6 April 2004, n. 174 of the Ministry of Health (Official Journal n. 166 of 17-7-2004)
Decree 7 February 2012, n.25 of the Ministry from the Health (Official Journal) n. 166 of the (17-7-2004)

Disposal of end-of-life equipment by users

This symbol warns you not to dispose of the product with normal waste. Respect human health and the environment by giving the discarded equipment to a designated collection center for the recycling of electronic and electrical equipment. For more information visit the online site.

When dismantling a pump please separate material types and send them according to local recycling disposal requirements. We appreciate your efforts in supporting your local Recycle Environmental Program. Working together we'll form an active union to assure the world's invaluable resources are conserved.