LD MULTICHANNEL - LD MULTICHANNEL PLUS

Data Sheet

MULTIPLE READING DIGITAL SYSTEMS

Digital controllers for measurement and control of two parameters, with temperature reading (° C or ° F).

LD MULTICHANNEL series is controlled by an "ENCODER".
Working mode can be set:

- on / off
- pulse proportional
- proportional PWM
- fixed PWM

LD MULTICHANNEL PLUS has got, further more, working modes:

- PID
- proportional with water meter
- IN-LINE

Instruments connected in a network (up to 31 instruments) can be remotely controlled.

Combined with probes and probe holders, they can be assembled on panels to have a complete turnkey control system.

R3-05-25

REMOTE CONTROL
Remote control is available with ETHERNET or GSM/GPRS configurations.
Remote control via: www.ermes-server.com.

SOFTWARE
English software available. Ask for French or Deutsch.

CUSTOMIZATION
Instruments can be customized with client logo on frontal panel.

STAND-BY INPUT

FLOW CONTROL INPUT

PERMANENT DATA STORAGE (WITHOUT BATTERY)
System log on display.

DELAY
Programmable delay at dosing start-up (up to 60 minutes).

ALARMS
Alarms for: damaged probe; max dosage, flow, threshold, level (double level).

DISPLAY
Probe readings, alarms notification, network status (Ethernet; USB, GSM/GPRS) are shown on display.

PROBE READOUT MENU

PH PRIORITY DOSAGE
pH priority dosage on second parameter.

mA OUTPUT
As option.

MODBUS
Modbus is a serial communication protocol for connecting instruments to other devices on RS485 network. Available as standard on LD models, as option on LD PLUS.

ALARM RELAIS
230 VAC output alarm.

DOUBLE SETPOINT
Relais set for 2 setpoint.

FLOCCULANT OUTPUT (230 VAC)
LDPHCL and LDPHRH only.

INTERNAL CLOCK

AUTOMATIC OR MANUAL DOSING ACTIVITY

LD MULTICHANNEL PLUS ONLY

WATER METER INPUT

mA WATER METER INPUT (ON REQUEST)

mA OUTPUT

PID

Via Donatori di Sangue, 1 - 02100 Rieti (Italy)
+39 074622841 | emecpumps.com

Specifications subject to change without notice | R2025

emec SIMPLE AS WATER

IQNET CERTIFIED MANAGEMENT SYSTEM
qualityaustria SYSTEM CERTIFIED
ISO 9001:2015 No.07728/0
ISO 14001:2015 No.00997/0
ISO 45001:2018 No.01121/0

LD MULTICHANNEL - LD MULTICHANNEL PLUS

Data Sheet

MULTIPLE READING DIGITAL SYSTEMS

MODELS

STANDARD	PLUS	MEASURING PARAMETER
LDPHCL	**LDPHCL PLUS**	pH and Chlorine (or hydrogen peroxyde, ozone, peracetic acid, chlorine dioxide, bromine)
LDPHRH	**LDPHRH PLUS**	pH and ORP
LDPHCD	**LDPHCD PLUS**	pH and Conductivity
LDPHCDIND	**LDPHCDIND PLUS**	pH and Inductive Conductivity (probe mod. ECDINDPT)
LDPHTORBH	**LDPHTORBH PLUS**	pH and Turbidity (probe mod. ETORBH)
LDPHTRC	**LDPHTRC PLUS**	pH and tracers (probe mod. ETRC)
LDCDCD	**LDCDCD PLUS**	2 Channels for Conductivity
LDCLCL	**LDCLCL PLUS**	2 Channels for Chlorine (or hydrogen peroxyde, ozone, peracetic acid, chlorine dioxide, bromine)

DIMENSIONS

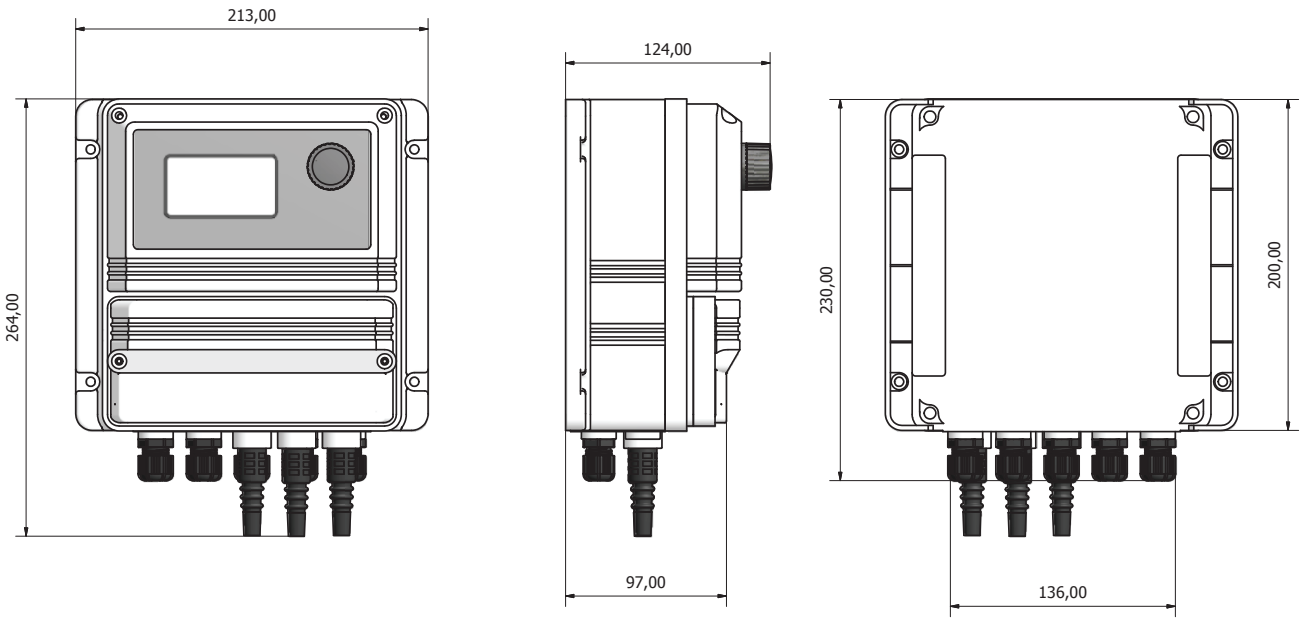

mm

Via Donatori di Sangue, 1 - 02100 Rieti (Italy)
+39 074622841 | emecpumps.com

Specifications subject to change without notice | R2025

emec SIMPLE AS WATER

IQNET CERTIFIED MANAGEMENT SYSTEM

qualityaustria SYSTEM CERTIFIED
ISO 9001:2015 No.07728/0
ISO 14001:2015 No.00997/0
ISO 45001:2018 No.01121/0

LD MULTICHANNEL - LD MULTICHANNEL PLUS

Data Sheet

MULTIPLE READING DIGITAL SYSTEMS

LDPHCL - LDPHCL PLUS

	LDPHCL	LDPHCL PLUS
MEASURING PARAMETER	pH / chlorine	
RANGE	0-14 pH / chlorine based on probe model [1]	
TEMPERATURE COMPENSATION	Chlorine and PH (with ECL6 only)	
CONTROL	Prop. - On/Off	Prop. - On/Off - PID - Prop.+WM - IN-LINE
INPUT SIGNAL	BNC connector for pH - PCB for Chlorine	
POWER SUPPLY	85-264 VAC; 50/60 Hz	
AVERAGE CONSUMPTION	25 W	
ON/OFF OUTPUT	2 relays; 5A @ 230 VAC (fuse protected)	
ALARM OUTPUT	85-264VAC alarm output	
INPUT	Stand-by Flow PH+ level PH- level Chlorine level PH probe Chlorine probe Temperature probe	Stand-by Flow PH+ level PH- level Chlorine level PH probe Chlorine probe Temperature probe Water meter mA water meter [2]
OUTPUT	2 proportional impulsive (pH) Proportional impulsive (Cl) Proportional on/off (pH) Proportional on/off (Cl) 3 mA output (pH, Cl, temperature) as option [2] Flocculant output (230 VAC) General alarm	2 proportional impulsive (pH) Proportional impulsive (Cl) Proportional on/off (pH) Proportional on/off (Cl) 3 mA output (pH, Cl, temperature) Flocculant output (230 VAC) General alarm
ENVIRONMENT TEMPERATURE	-10°C ... 50°C (14°F ... 122°F)	
PROTECTION	IP65 - % working UR: 85% with ≤40 °C; 70% at 50 °C (non condensing)	
POLLUTION LEVEL	2	
ENCLOSURE	ABS	
TEST/CERTIFICATION	CE	
DIMENSIONS	refer to the drawing	
WEIGHT	1,45 kg (3.1967 lb)	
INSTALLATION	vertical wall (4 fixing holes)	
OPTIONS [2]	• mA output • 9-18 or 18-36 VDC power supply • ADVANCED USB configuration [3] • ETHERNET configuration [3] • GSM/GPRS configuration [3] • WIFI configuration [3]	• mA Water Meter input • POWER SUPPLY 9-30 VDC • ADVANCED USB configuration [3] • ETHERNET configuration [3] • GSM/GPRS configuration [3] • MODBUS configuration [3] • WIFI configuration [3]

[1] Chlorine probe:

SCL 3S/20	0-20.00 mg/l
SCL 3N/2	0-2.000 mg/l
SCL 3N/20	0-20.00 mg/l
SCL 3N/200	0-200.0 mg/l
SCL 8/2	0-2.000 mg/l
SCL 8/20	0-20.00 mg/l
SCL 9/200	0-200.0 mg/l
SCL 10/2	0-2.000 mg/l
SCL 10/20	0-20.00 mg/l
SCL 11/200	0-200.0 mg/l
SCL 11/2000	0-2000 mg/l
SCL 2/2	0-2.000 mg/l
SCL 2/20	0-20.00 mg/l
SCL 17/2	0-2.000 mg/l
SCL 17/20	0-20.00 mg/l
SCL 18/2	0-2.000 mg/l
SCL 18/20	0-20.00 mg/l
SBR 20	0-20.00 mg/l
OPEN AMPEROMETRIC CELL	
ECL 4, 5, 6, 6E, 7, 12, 12E	0-10.00 mg/l or Br

[2] On request.

[3] For configuration features refer to the table at the end of the document.

Via Donatori di Sangue, 1 - 02100 Rieti (Italy)
+39 074622841 | emecpumps.com

Specifications subject to change without notice | R2025

emec SIMPLE AS WATER

IQNET CERTIFIED MANAGEMENT SYSTEM
qualityaustria SYSTEM CERTIFIED
ISO 9001:2015 No.07728/0
ISO 14001:2015 No.00997/0
ISO 45001:2018 No.01121/0

LD MULTICHANNEL - LD MULTICHANNEL PLUS

Data Sheet

MULTIPLE READING DIGITAL SYSTEMS

LDPHRH - LDPHRH PLUS

	LDPHRH	LDPHRH PLUS
MEASURING PARAMETER	pH / ORP	
RANGE	0-14 pH / 0-1000 mV; resolution: 0,1	
TEMPERATURE COMPENSATION	pH	
CONTROL	Prop. - On/Off	Prop. - On/Off - PID - Prop.+WM - IN-LINE
INPUT SIGNAL	BNC connector for pH - BNC connector for ORP	
POWER SUPPLY	85-264 VAC; 50/60 Hz	
AVERAGE CONSUMPTION	25 W	
ON/OFF OUTPUT	2 relays; 5A @ 230 VAC (fuse protected)	
ALARM OUTPUT	85-264VAC alarm output	
INPUT	Stand-by Flow PH+ level PH- level ORP level PH probe ORP probe Temperature probe	Stand-by Flow PH+ level PH- level ORP level PH probe ORP probe Temperature probe Water meter mA water meter [1]
OUTPUT	2 proportional impulsive(pH) Proportional impulsive (ORP) Proportional on/off (pH) Proportional on/off (ORP) 3 mA output (pH, ORP, temperature) as option [1] Flocculant output (230 VAC) General alarm	2 proportional impulsive(pH) Proportional impulsive (ORP) Proportional on/off (pH) Proportional on/off (ORP) 3 mA output (pH, ORP, temperature) Flocculant output (230 VAC) General alarm
ENVIRONMENT TEMPERATURE	-10°C ... 50°C (14°F ... 122°F)	
PROTECTION	IP65 - % working UR: 85% with ≤40 °C; 70% at 50 °C (non condensing)	
POLLUTION LEVEL	2	
ENCLOSURE	ABS	
TEST/CERTIFICATION	CE	
DIMENSIONS	refer to the drawing	
WEIGHT	1,45 kg (3.1967 lb)	
INSTALLATION	vertical wall (4 fixing holes)	
OPTIONS [1]	• mA output • 9-18 or 18-36 VDC power supply • ADVANCED USB configuration [2] • ETHERNET configuration [2] • GSM/GPRS configuration [2] • WIFI configuration [2]	• mA Water Meter input • POWER SUPPLY 9-30 VDC • ADVANCED USB configuration [2] • ETHERNET configuration [2] • GSM/GPRS configuration [2] • MODBUS configuration [2] • WIFI configuration [2]

[1] On request.
[2] For configuration features refer to the table at the end of the document.

Via Donatori di Sangue, 1 - 02100 Rieti (Italy)
+39 074622841 | emecpumps.com

Specifications subject to change without notice | R2025

emec SIMPLE AS WATER

IQNET CERTIFIED MANAGEMENT SYSTEM
qualityaustria SYSTEM CERTIFIED
ISO 9001:2015 No.07728/0
ISO 14001:2015 No.00997/0
ISO 45001:2018 No.01121/0

LDCDCD - LDCDCD PLUS

	LDCDCD	LDCDCD PLUS
MEASURING PARAMETER	Double Channel for Conductivity with temperature reading (°C or °F)	
RANGE	0-300,0 µS 0-3000 µS 0-30,00 mS 0-300,0 mS	
TEMPERATURE COMPENSATION	Conductivity	
CONTROL	Prop. - On/Off	Prop. - On/Off - PID - Prop.+WM - IN-LINE
INPUT SIGNAL	2 PCB for conductivity	
POWER SUPPLY	85-264 VAC; 50/60 Hz	
AVERAGE CONSUMPTION	25 W	
ON/OFF OUTPUT	2 relays; 5A @ 230 VAC (fuse protected)	
ALARM OUTPUT	85-264VAC alarm output	
INPUT	Stand-by Flow CD+ level CD- level Conductivity level 2 Conductivity probes Temperature probe	Stand-by Flow CD+ level CD- level Conductivity level 2 Conductivity probes Temperature probe Water meter mA water meter [1]
OUTPUT	3 Proportional impulsive (Conductivity) 2 Proportional on/off (Conductivity) 3 mA output (Conductivity, temperature) as option[1] General alarm	3 Proportional impulsive (Conductivity) 2 Proportional on/off (Conductivity) 3 mA output (Conductivity, temperature) General alarm
ENVIRONMENT TEMPERATURE	-10°C ... 50°C (14°F ... 122°F)	
PROTECTION	IP65 - % working UR: 85% with ≤40 °C; 70% at 50 °C (non condensing)	
POLLUTION LEVEL	2	
ENCLOSURE	ABS	
TEST/CERTIFICATION	CE	
DIMENSIONS	refer to the drawing	
WEIGHT	1,45 kg (3.1967 lb)	
INSTALLATION	vertical wall (4 fixing holes)	
OPTIONS [1]	• mA output • 9-18 or 18-36 VDC power supply • ADVANCED USB configuration [2] • ETHERNET configuration [2] • GSM/GPRS configuration [2] • WIFI configuration [2]	• mA Water Meter input • POWER SUPPLY 9-30 VDC • ADVANCED USB configuration [2] • ETHERNET configuration [2] • GSM/GPRS configuration [2] • MODBUS configuration [2] • WIFI configuration [2]

[1] On request.
[2] For configuration features refer to the table at the end of the document.

LDPHCD - LDPHCD PLUS

	LDPHCD	LDPHCD PLUS
MEASURING PARAMETER	pH / Conductivity with temperature reading (°C or °F)	
RANGE	0-14 pH / 0-300,0 µS 0-14 pH / 0-3000 µS 0-14 pH / 0-30,00 mS 0-14 pH / 0-300,0 mS	
TEMPERATURE COMPENSATION	ph and conductivity	
CONTROL	Prop. - On/Off	Prop. - On/Off - PID - Prop.+WM - IN-LINE
INPUT SIGNAL	BNC connector for pH - PCB for conductivity	
POWER SUPPLY	85-264 VAC; 50/60 Hz	
AVERAGE CONSUMPTION	25 W	
ON/OFF OUTPUT	2 relays; 5A @ 230 VAC (fuse protected)	
ALARM OUTPUT	85-264VAC alarm output	
INPUT	Stand-by Flow PH+ level PH- level Conductivity level PH probe Conductivity probe Temperature probe	Stand-by Flow PH+ level PH- level Conductivity level PH probe Conductivity probe Temperature probe Water meter mA water meter [1]
OUTPUT	2 proportional impulsive (pH) Proportional impulsive (Conductivity) Proportional on/off (pH) Proportional on/off (Conductivity) 3 mA output (pH, Conductivity, temperature) as option[1] General alarm	2 proportional impulsive (pH) Proportional impulsive (Conductivity) Proportional on/off (pH) Proportional on/off (Conductivity) 3 mA output (pH, Conductivity, temperature) General alarm
ENVIRONMENT TEMPERATURE	-10°C ... 50°C (14°F ... 122°F)	
PROTECTION	IP65 - % working UR: 85% with ≤40 °C; 70% at 50 °C (non condensing)	
POLLUTION LEVEL	2	
ENCLOSURE	ABS	
TEST/CERTIFICATION	CE	
DIMENSIONS	refer to the drawing	
WEIGHT	1,45 kg (3.1967 lb)	
INSTALLATION	vertical wall (4 fixing holes)	
OPTIONS [1]	• mA output • 9-18 or 18-36 VDC power supply • ADVANCED USB configuration [2] • ETHERNET configuration [2] • GSM/GPRS configuration [2] • WIFI configuration [2]	• mA Water Meter input • POWER SUPPLY 9-30 VDC • ADVANCED USB configuration [2] • ETHERNET configuration [2] • GSM/GPRS configuration [2] • MODBUS configuration [2] • WIFI configuration [2]

[1] On request.
[2] For configuration features refer to the table at the end of the document.

LDPHCD IND - LDPHCD IND PLUS

	LDPHCD IND	LDPHCD IND PLUS
MEASURING PARAMETER	pH / Inductive conductivity with temperature reading (°C or °F)	
RANGE	0-14 pH / 0-3,000 mS 0-14 pH / 0-30,00 mS 0-14 pH / 0-300,0 mS	
TEMPERATURE COMPENSATION	ph and conductivity	
CONTROL	Prop. - On/Off	Prop. - On/Off - PID - Prop.+WM - IN-LINE
INPUT SIGNAL	BNC connector for pH - PCB for conductivity	
POWER SUPPLY	85-264 VAC; 50/60 Hz	
AVERAGE CONSUMPTION	25 W	
ON/OFF OUTPUT	2 relays; 5A @ 230 VAC (fuse protected)	
ALARM OUTPUT	85-264VAC alarm output	
INPUT	Stand-by Flow PH+ level PH- level Inductive conductivity level PH probe Inductive conductivity probe Temperature probe	Stand-by Flow PH+ level PH- level Inductive conductivity level PH probe Inductive conductivity probe Temperature probe Water meter mA water meter [1]
OUTPUT	2 proportional impulsive (pH) Proportional impulsive (Inductive conductivity) Proportional on/off (pH) Proportional on/off (Inductive conductivity) 3 mA output (pH, Inductive conductivity, temperature) as option [1] General alarm	2 proportional impulsive (pH) Proportional impulsive (Inductive conductivity) Proportional on/off (pH) Proportional on/off (Inductive conductivity) 3 mA output (pH, Inductive conductivity, temperature) General alarm
ENVIRONMENT TEMPERATURE	-10°C ... 50°C (14°F ... 122°F)	
PROTECTION	IP65 - % working UR: 85% with ≤40 °C; 70% at 50 °C (non condensing)	
POLLUTION LEVEL	2	
ENCLOSURE	ABS	
TEST/CERTIFICATION	CE	
DIMENSIONS	refer to the drawing	
WEIGHT	1,45 kg (3.1967 lb)	
INSTALLATION	vertical wall (4 fixing holes)	
OPTIONS [1]	• mA output • 9-18 or 18-36 VDC power supply • ADVANCED USB configuration [2] • ETHERNET configuration [2] • GSM/GPRS configuration [2] • WIFI configuration [2]	• mA Water Meter input • POWER SUPPLY 9-30 VDC • ADVANCED USB configuration [2] • ETHERNET configuration [2] • GSM/GPRS configuration [2] • MODBUS configuration [2] • WIFI configuration [2]

[1] On request.
[2] For configuration features refer to the table at the end of the document.

LDPHTORBH - LDPHTORBH PLUS

	LDPHTORBH	LDPHTORBH PLUS
MEASURING PARAMETER	pH / Turbidity with temperature reading (°C or °F)	
RANGE	0-14 pH / 0-9999 NTU	
TEMPERATURE COMPENSATION	pH	
CONTROL	Prop. - On/Off	Prop. - On/Off - PID - Prop.+WM - IN-LINE
INPUT SIGNAL	BNC connector for pH - PCB for Turbidity	
POWER SUPPLY	85-264 VAC; 50/60 Hz	
AVERAGE CONSUMPTION	25 W	
ON/OFF OUTPUT	2 relays; 5A @ 230 VAC (fuse protected)	
USCITA ALLARME	85-264VAC alarm output	
INPUT	Stand-by Flow PH+ level PH- level Turbidity level PH probe Turbidity probe Temperature probe	Stand-by Flow PH+ level PH- level Turbidity level PH probe Turbidity probe Temperature probe Water meter mA water meter [1]
OUTPUT	2 proportional impulsive (pH) Proportional impulsive (Turbidity) Proportional on/off (pH) Proportional on/off (Turbidity) 3 mA output (pH, Turbidity, temperature) as option [1] General alarm	2 proportional impulsive (pH) Proportional impulsive (Turbidity) Proportional on/off (pH) Proportional on/off (Turbidity) 3 mA output (pH, Turbidity, temperature) General alarm
ENVIRONMENT TEMPERATURE	-10°C ... 50°C (14°F ... 122°F)	
PROTECTION	IP65 - % working UR: 85% with ≤40 °C; 70% at 50 °C (non condensing)	
POLLUTION LEVEL	2	
ENCLOSURE	ABS	
TEST/CERTIFICATION	CE	
DIMENSIONS	refer to the drawing	
WEIGHT	1,45 kg (3.1967 lb)	
INSTALLATION	vertical wall (4 fixing holes)	
OPTIONS [1]	• mA output • 9-18 or 18-36 VDC power supply • ADVANCED USB configuration [2] • ETHERNET configuration [2] • GSM/GPRS configuration [2] • WIFI configuration [2]	• mA Water Meter input • POWER SUPPLY 9-30 VDC • ADVANCED USB configuration [2] • ETHERNET configuration [2] • GSM/GPRS configuration [2] • MODBUS configuration [2] • WIFI configuration [2]

[1] On request.
[2] For configuration features refer to the table at the end of the document.

LDPHTRC - LDPHTRC PLUS

	LDPHTRC	LDPHTRC PLUS
MEASURING PARAMETER	pH / Tracers	
RANGE	0-14 pH / 0-999.9 ppm	
TEMPERATURE COMPENSATION	/	
CONTROL	Prop. - On/Off	Prop. - On/Off - PID - Prop.+WM - IN-LINE
INPUT SIGNAL	BNC connector for pH - PCB for TRC	
POWER SUPPLY	85-264 VAC; 50/60 Hz	
AVERAGE CONSUMPTION	25 W	
ON/OFF OUTPUT	2 relays; 5A @ 230 VAC (fuse protected)	
USCITA ALLARME	85-264VAC alarm output	
INPUT	Stand-by Flow PH+ level PH- level TRC level PH probe TRC probe Temperature probe	Stand-by Flow PH+ level PH- level TRC level PH probe TRC probe Temperature probe Water meter mA water meter [1]
OUTPUT	2 proportional impulsive (pH) Proportional impulsive (TRC) Proportional on/off (pH) Proportional on/off (TRC) 3 mA output (pH, TRC, temperature) as option [1] General alarm	2 proportional impulsive (pH) Proportional impulsive (TRC) Proportional on/off (pH) Proportional on/off (TRC) 3 mA output (pH, TRC, temperature) General alarm
ENVIRONMENT TEMPERATURE	-10°C ... 50°C (14°F ... 122°F)	
PROTECTION	IP65 - % working UR: 85% with ≤40 °C; 70% at 50 °C (non condensing)	
POLLUTION LEVEL	2	
ENCLOSURE	ABS	
TEST/CERTIFICATION	CE	
DIMENSIONS	refer to the drawing	
WEIGHT	1,45 kg (3.1967 lb)	
INSTALLATION	vertical wall (4 fixing holes)	
OPTIONS [1]	• mA output • 9-18 or 18-36 VDC power supply • ADVANCED USB configuration [2] • ETHERNET configuration [2] • GSM/GPRS configuration [2] • WIFI configuration [2]	• mA Water Meter input • POWER SUPPLY 9-30 VDC • ADVANCED USB configuration [2] • ETHERNET configuration [2] • GSM/GPRS configuration [2] • MODBUS configuration [2] • WIFI configuration [2]

LDPHDO - LDPHDO PLUS

	LDPHDO	LDPHDO PLUS
MEASURING PARAMETER	pH / Dissolved oxygen with temperature reading (°C or °F)	
RANGE	0-14 pH / 0-9,999 mg/l 0-14 pH / 0-999,9 mg/l 0-14 pH / 0-9999 mg/l	
TEMPERATURE COMPENSATION	ph and dissolved oxygen	
CONTROL	Prop. - On/Off	Prop. - On/Off - PID - Prop.+WM - IN-LINE
INPUT SIGNAL	BNC connector for pH - PCB for for Dissolved Oxygen	
POWER SUPPLY	85-264 VAC; 50/60 Hz	
AVERAGE CONSUMPTION	25 W	
ON/OFF OUTPUT	2 relays; 5A @ 230 VAC (fuse protected)	
ALARM OUTPUT	85-264VAC alarm output	
INPUT	Stand-by Flow PH+ level PH- level Inductive dissolved oxygen level PH probe Inductive dissolved oxygen probe Temperature probe	Stand-by Flow PH+ level PH- level Inductive dissolved oxygen level PH probe Inductive dissolved oxygen probe Temperature probe Water meter mA water meter [1]
OUTPUT	2 proportional impulsive (pH) Proportional impulsive (Inductive dissolved oxygen) Proportional on/off (pH) Proportional on/off (Inductive dissolved oxygen) 3 mA output (pH, Inductive dissolved oxygen, temperature) as option [1] General alarm	2 proportional impulsive (pH) Proportional impulsive (Inductive dissolved oxygen) Proportional on/off (pH) Proportional on/off (Inductive dissolved oxygen) 3 mA output (pH, Inductive dissolved oxygen, temperature) General alarm
ENVIRONMENT TEMPERATURE	-10°C ... 50°C (14°F ... 122°F)	
PROTECTION	IP65 - % working UR: 85% with ≤40 °C; 70% at 50 °C (non condensing)	
POLLUTION LEVEL	2	
ENCLOSURE	ABS	
TEST/CERTIFICATION	CE	
DIMENSIONS	refer to the drawing	
WEIGHT	1,45 kg (3.1967 lb)	
INSTALLATION	vertical wall (4 fixing holes)	
OPTIONS [1]	• mA output • 9-18 or 18-36 VDC power supply • ADVANCED USB configuration [2] • ETHERNET configuration [2] • GSM/GPRS configuration [2] • WIFI configuration [2]	• mA Water Meter input • POWER SUPPLY 9-30 VDC • ADVANCED USB configuration [2] • ETHERNET configuration [2] • GSM/GPRS configuration [2] • MODBUS configuration [2] • WIFI configuration [2]

[1] On request.
[2] For configuration features refer to the table at the end of the document.

LD MULTICHANNEL - LD MULTICHANNEL PLUS

Data Sheet

MULTIPLE READING DIGITAL SYSTEMS

LDCLCL - LDCLCL PLUS

	LDCLCL	LDCLCL PLUS
MEASURING PARAMETER	2 channles chlorine (hydrogen peroxyde, ozone, peracetic acid, chlorine dioxide, bromine)	
RANGE	Chlorine range is based on probe mode (see below)	
TEMPERATURE COMPENSATION	Chlorine (with ECL6 only)	
CONTROL	Prop. - On/Off	Prop. - On/Off - PID - Prop.+WM - IN-LINE
INPUT SIGNAL	2 PCB modules for Chlorine Ch1 & Ch2	
POWER SUPPLY	85-264 VAC; 50/60 Hz	
AVERAGE CONSUMPTION	25 W	
ON/OFF OUTPUT	2 relays; 5A @ 230 VAC (fuse protected)	
ALARM OUTPUT	85-264VAC alarm output	
INPUT	Stand-by Flow 2 Chlorine levels (Ch1 & Ch2) 2 Chlorine probes (Ch1 & Ch2) Temperature reading	Stand-by Flow 2 Chlorine levels (Ch1 & Ch2) 2 Chlorine probes (Ch1 & Ch2) Temperature reading Water meter Input mA water meter module[2]
OUTPUT	2 proportional impulsive (Cl Ch1) Proportional impulsive (Cl Ch2) Proportional on/off (Cl Ch1) Proportional on/off (Cl Ch2) 3 mA output (Cl Ch1, Cl Ch2, temperature) as option[2] Flocculant output (230 VAC) General alarm	2 proportional impulsive (Cl Ch1) Proportional impulsive (Cl Ch2) Proportional on/off (Cl Ch1) Proportional on/off (Cl Ch2) 3 mA output (Cl Ch1, Cl Ch2, temperature) Flocculant output (230 VAC) General alarm
ENVIRONMENT TEMPERATURE	-10°C ... 50°C (14°F ... 122°F)	
PROTECTION	IP65 - % working UR: 85% with ≤40 °C; 70% at 50 °C (non condensing)	
POLLUTION LEVEL	2	
ENCLOSURE	ABS	
TEST/CERTIFICATION	CE	
DIMENSIONS	refer to drawing	
WEIGHT	1,45 kg (3.1967 lb)	
INSTALLATION	vertical wall (4 fixing holes)	
OPTIONS [2]	• mA output • 9-18 or 18-36 VDC power supply • ADVANCED USB configuration [3] • ETHERNET configuration [3] • GSM/GPRS configuration [3] • WIFI configuration [3]	• mA Water Meter input • POWER SUPPLY 9-30 VDC • ADVANCED USB configuration [3] • ETHERNET configuration [3] • GSM/GPRS configuration [3] • MODBUS configuration [3] • WIFI configuration [3]

[1] Chlorine probe:

SCL 3S/20	0-20.00 mg/l
SCL 3N/2	0-2.000 mg/l
SCL 3N/20	0-20.00 mg/l
SCL 3N/200	0-200.0 mg/l
SCL 8/2	0-2.000 mg/l
SCL 8/20	0-20.00 mg/l
SCL 9/200	0-200.0 mg/l
SCL 10/2	0-2.000 mg/l
SCL 10/20	0-20.00 mg/l
SCL 11/200	0-200.0 mg/l
SCL 11/2000	0-2000 mg/l
SCL 2/2	0-2.000 mg/l
SCL 2/20	0-20.00 mg/l
SCL 17/2	0-2.000 mg/l
SCL 17/20	0-20.00 mg/l
SCL 18/2	0-2.000 mg/l
SCL 18/20	0-20.00 mg/l
SBR 20	0-20.00 mg/l
OPEN AMPEROMETRIC CELL	
ECL 4, 5, 6, 6E, 7, 12, 12E	0-10.00 mg/l or Br

[2] On request.

[3] For configuration features refer to the table at the end of the document.

CONFIGURATIONS

INSTRUMENT Configuration	PLUS	WHEN	REQUIREMENTS	FUNCTION
BASIC (standard)	/	For local control only	/	RS485 output to link other EMEC instruments or a PC
ADVANCED USB	USB output	You do not need a PC on your plant: you can download data log on a USB device	/	RS485 output to link other EMEC instruments or a PC Data Log on USB device
ETHERNET	LAN network between instrument and web	Remote control via WEB ERMES	LAN wiring (RJ-45)	RS485 output to link other EMEC instruments or a PC Web ERMES remote control (PC, smartphone or tablet) Alarm messages via email
GSM/GPRS	GPRS modem between instrument and web	Remote control via WEB ERMES	Network coverage	RS485 output to link other EMEC instruments or a PC Web ERMES remote control (PC, smartphone or tablet) Alarm messages via email Alarm messages via SMS
MODBUS	Connection to other devices (PLC) via RS485	PLC plant management	/	PLC connection output for reading and modifying parameters