# PRIUS D MF

## Multi-Function motor driven diaphragm metering pump

Data Sheet

R140625

Motor-driven diaphragm dosing pump, mechanical actuated, PRIUS combines efficiency and chemical resistance to a wide capacity range for an extensive number of applications.

- Multifunction motor pump with inverter
- Working mode: Constant, ppm, %, mlq, pause-work, weekly, mA, pulse, Volt and Batch
- Level control
- Alarms
- Stand-by
- Double position of the electronic unit (standard or rotated mounting)
- PTFE diaphragm
- Aluminium enclosure
- Spring return mechanism
- Manual degassing valve (PVDF and PP pump heads)
- Flow regulation
- Liquid ends available in different sizes and materials
- Double ball check valve
- Tropicalized motors
- MODBUS option

STANDARD MOUNTING

ROTATED MOUNTING

The display has a four-color backlight that highlights: red color alarm, green color normal operation, yellow color attention, white color standby/off

## Identification code

| CIRCUIT | |
|---|---|
| MF | Multifunction 230 VAC |
| M1 | Multifunction 115 VAC |
| MM | Multifunction+Modbus |

| P | D | M | F | 0 | 1 | 0 | 0 | 6 | 0 | M | V | 1 | 2 | 0 | 0 | N | 0 | 0 | 0 |
|---|---|---|---|---|---|---|---|---|---|---|---|---|---|---|---|---|---|---|---|

BAR

L/H

CUSTOM.

PACKAGING

INTERNAL

COLOR

| UMS PUMP HEAD MATERIAL | |
|---|---|
| M | SS |
| U | PVDF |
| V | PP |

| NM/TM PUMP HEAD MATERIAL | |
|---|---|
| K | PVDF |
| P | PP |
| S | SS |

| | MOTOR |
|---|---|
| 2 | 0,37Kw |

| REDUCTION GEAR | | (50Hz) |
|---|---|---|
| 1 | 8:1 | 175 s/min |
| 2 | 15:1 | 94 s/min |
| 4 | 20:1 | 70 s/min |
| 5 | 40:1 | 35 s/min |

| O RING | |
|---|---|
| V | FKM B |
| D | Dutral |

| LUBRICANT TYPE | |
|---|---|
| BRAND | MODEL |
| MOBIL | MOBILGEAR 632 |
| SHELL | OMALA OIL 320 |
| BP | ENERGOL GR-XP 320 |
| IP | MELLANA OIL 320 |
| ESSO | SPARTAN EP 320 |
| AGIP | BLASIA 320 |

Via Donatori di Sangue, 1 - 02100 Rieti (Italy)
+39 074622841 | emecpumps.com

Specifications subject to change without notice | R2025

emec SIMPLE AS WATER

IQNET CERTIFIED MANAGEMENT SYSTEM

qualityaustria SYSTEM CERTIFIED

ISO 9001:2015 No.07728/0
ISO 14001:2015 No.00997/0
ISO 45001:2018 No.01121/0

# PRIUS D MF

Data Sheet

## Multi-Function motor driven diaphragm metering pump

## "PRIUS D MF" SERIES - SINGLE PHASE SUPPLY

## Features

- Aluminium enclosure (epoxy coating)
- Spring return mechanism
- Power supply: 230 VAC (+/-10%) - 50/60 Hz - single-phase
- Consumption 230VAC 2.3Arms 530VA | 115VAC 4.6Arms 530VA
- Environment temperature: ..... -10-40°C (14-104°F)
- Chemical temperature with PVDF pump head: ..... -10-65°C (14-149°F)*
- Chemical temperature with SS pump head: ..... -10-90°C (14-194°F)*
- Chemical temperature with PP pump head: ..... -10-40°C (14-104°F)
- Installation class ..... II
- Pollution level ..... 2
- Audible noise..... 78 dbA (± 5 dB)
- Protection degree ..... IP 55
- Max suction height ..... 3 m
- Oil capacity..... 0,3 lt (Refer to "Lubricant type" table)

High pressure ranges available (SS pump head).

* The specified tempe ature can be exceeded temporarily (max 15') for sterilization or flushing with hot water.

**PVDF PUMP HEAD**

**SS PUMP HEAD**

**PP PUMP HEAD**

Via Donatori di Sangue, 1 - 02100 Rieti (Italy)
+39 074622841 | emecpumps.com

Specifications subject to change without notice | R2025

emec SIMPLE AS WATER

IQNET CERTIFIED MANAGEMENT SYSTEM

qualityaustria SYSTEM CERTIFIED

ISO 9001:2015 No.07728/0
ISO 14001:2015 No.00997/0
ISO 45001:2018 No.01121/0

# Price PRIUS D MF Series | STANDARD

## PRIUS D MF

| bar | l/h | Pump Head | | | | Motor | PVDF |
|---|---|---|---|---|---|---|---|
| | | model | stroke (mm) | SPM | reduction | kW | hoses connection |
| 10 | 60 | NM | 3 | 175 | 8:1 | 0,37 | G 1/2" 13 mm (i.d.) |
| 10 | 30 | NM | 3 | 94 | 15:1 | 0,37 | G 1/2" 13 mm (i.d.) |
| 10 | 24 | NM | 3 | 70 | 20:1 | 0,37 | G 1/2" 13 mm (i.d.) |
| 10 | 12 | NM | 3 | 35 | 40:1 | 0,37 | G 1/2" 13 mm (i.d.) |
| 10 | 16 | NM | 4 | 35 | 40:1 | 0,37 | G 1/2" 13 mm (i.d.) |
| 10 | 105 | TM | 3 | 175 | 8:1 | 0,37 | G 3/4" 13 mm (i.d.) |
| 10 | 56 | TM | 3 | 94 | 15:1 | 0,37 | G 3/4" 13 mm (i.d.) |
| 10 | 42 | TM | 3 | 70 | 20:1 | 0,37 | G 3/4" 13 mm (i.d.) |
| 10 | 21 | TM | 3 | 35 | 40:1 | 0,37 | G 3/4" 13 mm (i.d.) |
| 7 | 160 | TM | 4 | 175 | 8:1 | 0,37 | G 3/4" 13 mm (i.d.) |
| 7 | 86 | TM | 4 | 94 | 15:1 | 0,37 | G 3/4" 13 mm (i.d.) |
| 7 | 64 | TM | 4 | 70 | 20:1 | 0,37 | G 3/4" 13 mm (i.d.) |
| 7 | 32 | TM | 4 | 35 | 40:1 | 0,37 | G 3/4" 13 mm (i.d.) |
| 5 | 240 | TM | 6 | 175 | 8:1 | 0,37 | G 3/4" 13 mm (i.d.) |
| 5 | 128 | TM | 6 | 94 | 15:1 | 0,37 | G 3/4" 18 mm (i.d.) |
| 5 | 96 | TM | 6 | 70 | 20:1 | 0,37 | G 3/4" 18 mm (i.d.) |
| 5 | 48 | TM | 6 | 35 | 40:1 | 0,37 | G 3/4" 18 mm (i.d.) |
| 2 | 1000 | UMS | 10 | 175 | 8:1 | 0,37 | G 3/4" 18 mm (i.d.) |
| 5 | 1000 | UMS | 10 | 175 | 8:1 | 0,55 | G 1 1/2" 30 mm (i.d.) |
| 4 | 520 | UMS | 10 | 94 | 15:1 | 0,37 | G 1 1/2" 30 mm (i.d.) |
| 5 | 390 | UMS | 10 | 70 | 20:1 | 0,37 | G 1 1/2" 30 mm (i.d.) |
| 5 | 180 | UMS | 10 | 35 | 40:1 | 0,37 | G 1 1/2" 30 mm (i.d.) |
| 5 | 350 | UMS | 4 | 175 | 8:1 | 0,37 | G 1 1/2" 30 mm (i.d.) |
| 5 | 188 | UMS | 4 | 94 | 15:1 | 0,37 | G 1 1/2" 30 mm (i.d.) |
| 5 | 140 | UMS | 4 | 70 | 20:1 | 0,37 | G 1 1/2" 30 mm (i.d.) |
| 5 | 70 | UMS | 4 | 35 | 40:1 | 0,37 | G 1 1/2" 30 mm (i.d.) |
| 5 | 440 | UMS | 5 | 175 | 8:1 | 0,37 | G 1 1/2" 30 mm (i.d.) |
| 5 | 236 | UMS | 5 | 94 | 15:1 | 0,37 | G 1 1/2" 30 mm (i.d.) |
| 5 | 176 | UMS | 5 | 70 | 20:1 | 0,37 | G 1 1/2" 30 mm (i.d.) |
| 5 | 88 | UMS | 5 | 35 | 40:1 | 0,37 | G 1 1/2" 30 mm (i.d.) |
| 5 | 530 | UMS | 6 | 175 | 8:1 | 0,37 | G 1 1/2" 30 mm (i.d.) |
| 5 | 284 | UMS | 6 | 94 | 15:1 | 0,37 | G 1 1/2" 30 mm (i.d.) |
| 5 | 212 | UMS | 6 | 70 | 20:1 | 0,37 | G 1 1/2" 30 mm (i.d.) |
| 5 | 106 | UMS | 6 | 35 | 40:1 | 0,37 | G 1 1/2" 30 mm (i.d.) |
| 3 | 750 | UMS | 8 | 175 | 8:1 | 0,37 | G 1 1/2" 30 mm (i.d.) |
| 5 | 380 | UMS | 8 | 94 | 15:1 | 0,37 | G 1 1/2" 30 mm (i.d.) |
| 5 | 290 | UMS | 8 | 70 | 20:1 | 0,37 | G 1 1/2" 30 mm (i.d.) |
| 5 | 141 | UMS | 8 | 35 | 40:1 | 0,37 | G 1 1/2" 30 mm (i.d.) |

# Price PRIUS D MF Series | STANDARD

## PRIUS D MF

| bar | l/h | Pump Head | | | | Motor | AISI 316L |
|---|---|---|---|---|---|---|---|
| | | model | stroke (mm) | SPM | reduction | kW | hoses connection |
| 10 | 60 | NM | 3 | 175 | 8:1 | 0,37 | R 1/2″ |
| 10 | 30 | NM | 3 | 94 | 15:1 | 0,37 | R 1/2″ |
| 10 | 24 | NM | 3 | 70 | 20:1 | 0,37 | R 1/2″ |
| 10 | 12 | NM | 3 | 35 | 40:1 | 0,37 | R 1/2″ |
| 10 | 16 | NM | 4 | 35 | 40:1 | 0,37 | R 1/2″ |
| 10 | 105 | TM | 3 | 175 | 8:1 | 0,37 | R 3/4″ |
| 10 | 56 | TM | 3 | 94 | 15:1 | 0,37 | R 3/4″ |
| 10 | 42 | TM | 3 | 70 | 20:1 | 0,37 | R 3/4″ |
| 10 | 21 | TM | 3 | 35 | 40:1 | 0,37 | R 3/4″ |
| 7 | 160 | TM | 4 | 175 | 8:1 | 0,37 | R 3/4″ |
| 7 | 86 | TM | 4 | 94 | 15:1 | 0,37 | R 3/4″ |
| 7 | 64 | TM | 4 | 70 | 20:1 | 0,37 | R 3/4″ |
| 7 | 32 | TM | 4 | 35 | 40:1 | 0,37 | R 3/4″ |
| 5 | 240 | TM | 6 | 175 | 8:1 | 0,37 | R 3/4″ |
| 5 | 128 | TM | 6 | 94 | 15:1 | 0,37 | R 3/4″ |
| 5 | 96 | TM | 6 | 70 | 20:1 | 0,37 | R 3/4″ |
| 5 | 48 | TM | 6 | 35 | 40:1 | 0,37 | R 3/4″ |
| 2 | 1000 | UMS | 10 | 175 | 8:1 | 0,37 | R 3/4″ |
| 4 | 520 | UMS | 10 | 94 | 15:1 | 0,37 | R 1″ |
| 5 | 390 | UMS | 10 | 70 | 20:1 | 0,37 | R 1″ |
| 5 | 180 | UMS | 10 | 35 | 40:1 | 0,37 | R 1″ |
| 5 | 350 | UMS | 4 | 175 | 8:1 | 0,37 | R 1″ |
| 5 | 188 | UMS | 4 | 94 | 15:1 | 0,37 | R 1″ |
| 5 | 140 | UMS | 4 | 70 | 20:1 | 0,37 | R 1″ |
| 5 | 70 | UMS | 4 | 35 | 40:1 | 0,37 | R 1″ |
| 5 | 440 | UMS | 5 | 175 | 8:1 | 0,37 | R 1″ |
| 5 | 236 | UMS | 5 | 94 | 15:1 | 0,37 | R 1″ |
| 5 | 176 | UMS | 5 | 70 | 20:1 | 0,37 | R 1″ |
| 5 | 88 | UMS | 5 | 35 | 40:1 | 0,37 | R 1″ |
| 5 | 530 | UMS | 6 | 175 | 8:1 | 0,37 | R 1″ |
| 5 | 284 | UMS | 6 | 94 | 15:1 | 0,37 | R 1″ |
| 5 | 212 | UMS | 6 | 70 | 20:1 | 0,37 | R 1″ |
| 5 | 106 | UMS | 6 | 35 | 40:1 | 0,37 | R 1″ |
| 3 | 750 | UMS | 8 | 175 | 8:1 | 0,37 | R 1″ |
| 5 | 380 | UMS | 8 | 94 | 15:1 | 0,37 | R 1″ |
| 5 | 290 | UMS | 8 | 70 | 20:1 | 0,37 | R 1″ |
| 5 | 141 | UMS | 8 | 35 | 40:1 | 0,37 | R 1″ |

# Price PRIUS D MF Series | STANDARD

## PRIUS D MF

| bar | l/h | Pump Head | | | | Motor | |
|---|---|---|---|---|---|---|---|
| | | model | stroke (mm) | SPM | reduction | kW | hoses connection |
| 10 | 60 | NM | 3 | 175 | 8:1 | 0,37 | G 1/2" 13 mm (i.d.) |
| 10 | 30 | NM | 3 | 94 | 15:1 | 0,37 | G 1/2" 13 mm (i.d.) |
| 10 | 24 | NM | 3 | 70 | 20:1 | 0,37 | G 1/2" 13 mm (i.d.) |
| 10 | 12 | NM | 3 | 35 | 40:1 | 0,37 | G 1/2" 13 mm (i.d.) |
| 10 | 16 | NM | 4 | 35 | 40:1 | 0,37 | G 1/2" 13 mm (i.d.) |
| 10 | 105 | TM | 3 | 175 | 8:1 | 0,37 | G 3/4" 13 mm (i.d.) |
| 10 | 56 | TM | 3 | 94 | 15:1 | 0,37 | G 3/4" 13 mm (i.d.) |
| 10 | 42 | TM | 3 | 70 | 20:1 | 0,37 | G 3/4" 13 mm (i.d.) |
| 10 | 21 | TM | 3 | 35 | 40:1 | 0,37 | G 3/4" 13 mm (i.d.) |
| 7 | 160 | TM | 4 | 175 | 8:1 | 0,37 | G 3/4" 13 mm (i.d.) |
| 7 | 86 | TM | 4 | 94 | 15:1 | 0,37 | G 3/4" 13 mm (i.d.) |
| 7 | 64 | TM | 4 | 70 | 20:1 | 0,37 | G 3/4" 13 mm (i.d.) |
| 7 | 32 | TM | 4 | 35 | 40:1 | 0,37 | G 3/4" 13 mm (i.d.) |
| 5 | 240 | TM | 6 | 175 | 8:1 | 0,37 | G 3/4" 13 mm (i.d.) |
| 5 | 128 | TM | 6 | 94 | 15:1 | 0,37 | G 3/4" 18 mm (i.d.) |
| 5 | 96 | TM | 6 | 70 | 20:1 | 0,37 | G 3/4" 18 mm (i.d.) |
| 5 | 48 | TM | 6 | 35 | 40:1 | 0,37 | G 3/4" 18 mm (i.d.) |
| 2 | 1000 | UMS | 10 | 175 | 8:1 | 0,37 | G 3/4" 18 mm (i.d.) |
| 5 | 1000 | UMS | 10 | 175 | 8:1 | 0,55 | G 1 1/2" 30 mm (i.d.) |
| 4 | 520 | UMS | 10 | 94 | 15:1 | 0,37 | G 1 1/2" 30 mm (i.d.) |
| 5 | 390 | UMS | 10 | 70 | 20:1 | 0,37 | G 1 1/2" 30 mm (i.d.) |
| 5 | 180 | UMS | 10 | 35 | 40:1 | 0,37 | G 1 1/2" 30 mm (i.d.) |
| 5 | 350 | UMS | 4 | 175 | 8:1 | 0,37 | G 1 1/2" 30 mm (i.d.) |
| 5 | 188 | UMS | 4 | 94 | 15:1 | 0,37 | G 1 1/2" 30 mm (i.d.) |
| 5 | 140 | UMS | 4 | 70 | 20:1 | 0,37 | G 1 1/2" 30 mm (i.d.) |
| 5 | 70 | UMS | 4 | 35 | 40:1 | 0,37 | G 1 1/2" 30 mm (i.d.) |
| 5 | 440 | UMS | 5 | 175 | 8:1 | 0,37 | G 1 1/2" 30 mm (i.d.) |
| 5 | 236 | UMS | 5 | 94 | 15:1 | 0,37 | G 1 1/2" 30 mm (i.d.) |
| 5 | 176 | UMS | 5 | 70 | 20:1 | 0,37 | G 1 1/2" 30 mm (i.d.) |
| 5 | 88 | UMS | 5 | 35 | 40:1 | 0,37 | G 1 1/2" 30 mm (i.d.) |
| 5 | 530 | UMS | 6 | 175 | 8:1 | 0,37 | G 1 1/2" 30 mm (i.d.) |
| 5 | 284 | UMS | 6 | 94 | 15:1 | 0,37 | G 1 1/2" 30 mm (i.d.) |
| 5 | 212 | UMS | 6 | 70 | 20:1 | 0,37 | G 1 1/2" 30 mm (i.d.) |
| 5 | 106 | UMS | 6 | 35 | 40:1 | 0,37 | G 1 1/2" 30 mm (i.d.) |
| 3 | 750 | UMS | 8 | 175 | 8:1 | 0,37 | G 1 1/2" 30 mm (i.d.) |
| 5 | 380 | UMS | 8 | 94 | 15:1 | 0,37 | G 1 1/2" 30 mm (i.d.) |
| 5 | 290 | UMS | 8 | 70 | 20:1 | 0,37 | G 1 1/2" 30 mm (i.d.) |
| 5 | 141 | UMS | 8 | 35 | 40:1 | 0,37 | G 1 1/2" 30 mm (i.d.) |

# Price PRIUS D MF Series | HIGH PRESSURE

## PRIUS D MF AP

| bar | l/h | Pump Head | | | | Motor | AISI 316L |
|---|---|---|---|---|---|---|---|
| | | model | stroke (mm) | SPM | reduction | kW | hoses connection |
| 100 | 4 | LM AP | 1,5 | 175 | 8:1 | 0,37 | R 3/8″ |
| 100 | 2 | LM AP | 1,5 | 94 | 15:1 | 0,37 | R 3/8″ |
| 100 | 1,5 | LM AP | 1,5 | 70 | 20:1 | 0,37 | R 3/8″ |
| 50 | 17 | MM AP | 2 | 175 | 8:1 | 0,37 | R 1/2″ |
| 50 | 9 | MM AP | 2 | 94 | 15:1 | 0,37 | R 1/2″ |
| 50 | 5 | MM AP | 2 | 70 | 20:1 | 0,37 | R 1/2″ |
| 50 | 2,5 | MM AP | 2 | 35 | 40:1 | 0,37 | R 1/2″ |
| 30 | 28 | NM AP | 2 | 175 | 8:1 | 0,37 | R 1/2″ |
| 30 | 15 | NM AP | 2 | 94 | 15:1 | 0,37 | R 1/2″ |
| 30 | 10 | NM AP | 2 | 70 | 20:1 | 0,37 | R 1/2″ |
| 30 | 5 | NM AP | 2 | 35 | 40:1 | 0,37 | R 1/2″ |
| 30 | 76 | SM AP | 4 | 175 | 8:1 | 0,37 | R 1/2″ |
| 30 | 41 | SM AP | 4 | 94 | 15:1 | 0,37 | R 1/2″ |
| 30 | 30 | SM AP | 4 | 70 | 20:1 | 0,37 | R 1/2″ |
| 30 | 14 | SM AP | 4 | 35 | 40:1 | 0,37 | R 1/2″ |
| 20 | 91 | TM AP | 6 | 94 | 15:1 | 0,37 | R 3/4″ |
| 20 | 68 | TM AP | 6 | 70 | 20:1 | 0,37 | R 3/4″ |
| 20 | 34 | TM AP | 6 | 35 | 40:1 | 0,37 | R 3/4″ |

# PRIUS D MF

## Multi-Function motor driven diaphragm metering pump

Data Sheet

## Dimensions

WEIGHTS AND DIMENSIONS ARE REFERRED TO MOTOR PUMPS WITH UM PUMP HEAD MOD.

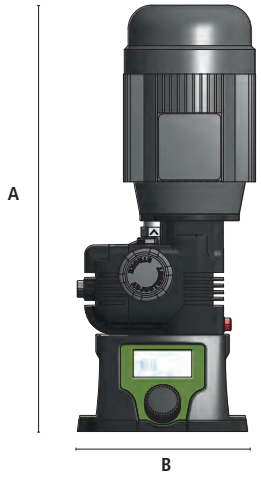

| DIMENSIONS (mm) | |
|---|---|
| | UM pump (PP) |
| **A** | 440 (0,37 kW) , 540 (0,55 kW) |
| **B** | 200 |
| **C** | 340 |
| **D** | 340 |
| **E** | 200 |
| **F** | 140 |
| **G** | 160 |
| **∅ fixing hole** | 8 |

| WEIGHT (kg) | |
|---|---|
| with PP pump head | 16 |
| with SS pump head | 25 |

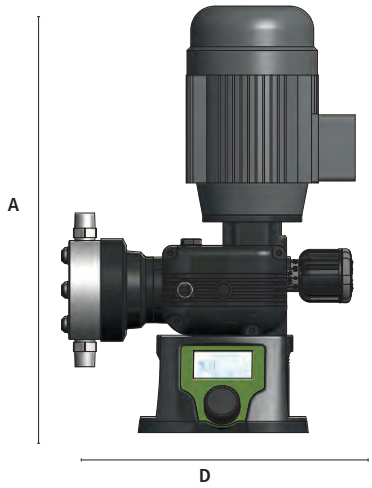


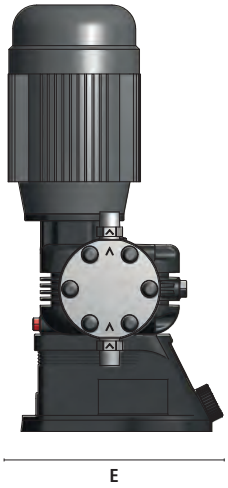


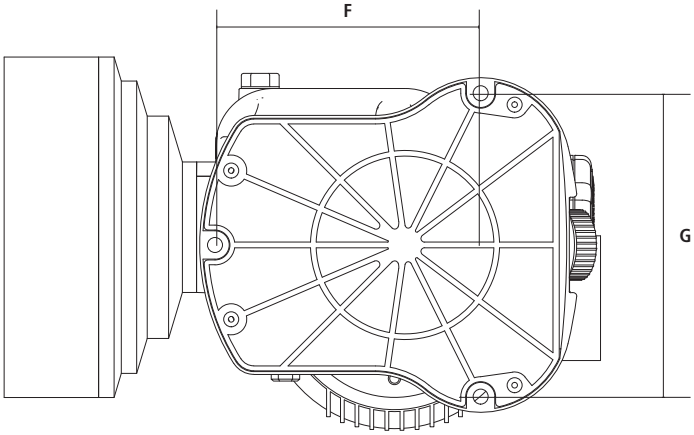


Via Donatori di Sangue, 1 - 02100 Rieti (Italy)
+39 074622841 | emecpumps.com

Specifications subject to change without notice | R2025

emec SIMPLE AS WATER

IQNET CERTIFIED MANAGEMENT SYSTEM
qualityaustria SYSTEM CERTIFIED
ISO 9001:2015 No.07728/0
ISO 14001:2015 No.00997/0
ISO 45001:2018 No.01121/0

**DIMENSIONS (MM) PRIUS WITH UMS PUMP HEAD (0,37KW)**

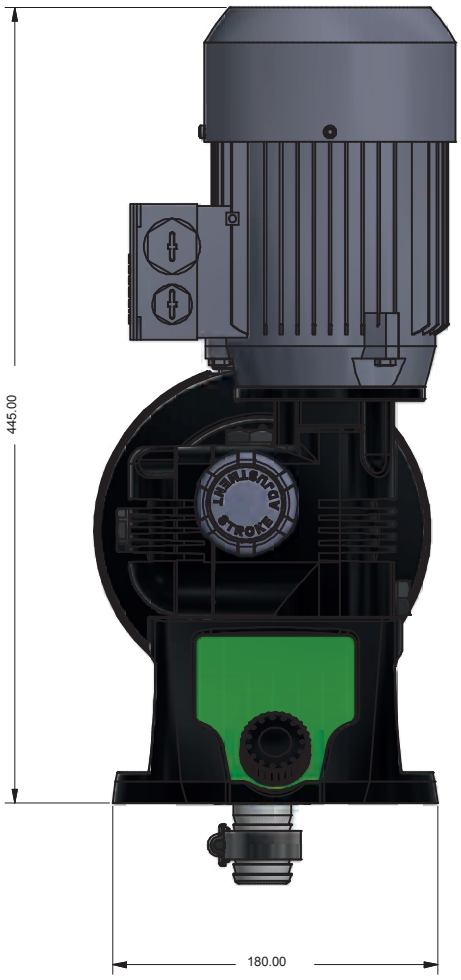


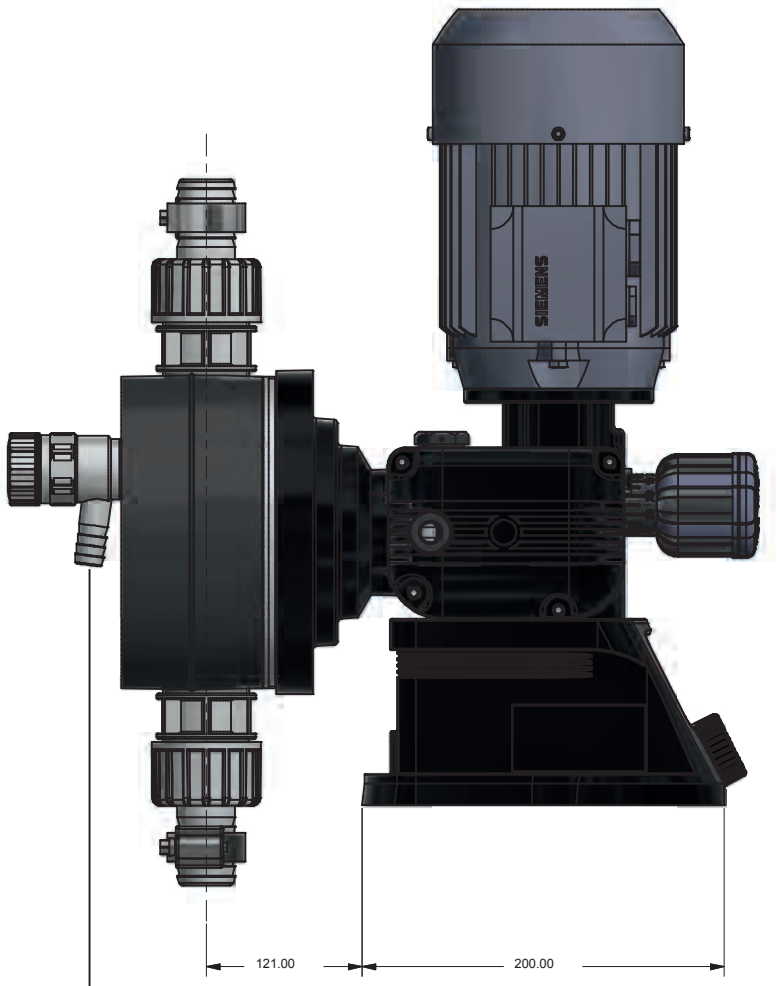


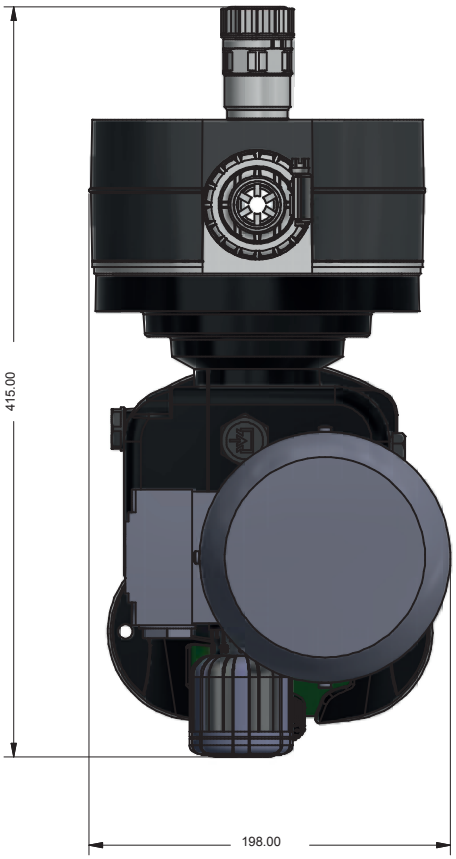


WARNING: AUTOMATIC PURGE VALVE FOR HIGH PRESSURE. CONNECT THE EXHAUST PIPE 16X22 PVC AND INSERT THE OTHER END IN THE TANK OF THE PRODUCT TO BE DOSED. THE EXHAUST PIPE MUST BE FIXED AND NOT LEFT FREE TO MOVE.

Via Donatori di Sangue, 1 - 02100 Rieti (Italy)
+39 074622841 | emecpumps.com

Specifications subject to change without notice | R2025

emec
SIMPLE AS WATER

IQNET CERTIFIED MANAGEMENT SYSTEM
qualityaustria SYSTEM CERTIFIED
ISO 9001:2015 No.07728/0
ISO 14001:2015 No.00997/0
ISO 45001:2018 No.01121/0