R990525

EOLUM

EOLUM

DISSOLVED OXYGEN PROBE

EN

OPERATING MANUAL

Brief overview

Here is how to use these Operating Instructions to commission your sensor quickly and safely:

	Safety instructions
→ 📄 4 → 📄 5	General safety instructions Explanation of the warning symbols You can find special instructions at the appropriate position in the chapter in question. The positions are indicated with the icons Warning ⚠, Caution ☝ and Note ✎.

▼

	Installation
→ 📄 7 → 📄 10	Here you can find installation conditions such as sensor dimensions and the angle of installation. Installation examples can be found here.

▼

	Wiring
→ 📄 14	Refer to these pages for sensor wiring.

▼

	Sensor design and measuring principle
→ 📄 16 → 📄 17 → 📄 17	Here you can read about the sensor design. The measuring principle is explained on this page. Here you can find the possible calibration methods.

▼

	Maintenance
→ 📄 21 → 📄 25	Regular maintenance tasks, such as cleaning the sensor, are absolutely essential and prolong the operating time of the sensor. Here you can find an overview of the spare parts which can be delivered as well as an overview of the system.

▼

	Troubleshooting
→ 📄 24	If faults occur during operation, use the checklist to locate the cause.

▼

▼

	Index
→ 📄 29	You can find important terms and keywords on the individual sections here. Use the keyword index to find the information you need quickly and efficiently.

Table of contents

1 Safety instructions 4

1.1 Designated use 4
1.2 Installation, commissioning and operation . . 4
1.3 Operational safety 4
1.4 Return 5
1.5 Notes on safety icons and symbols 5
1.6 Cross-reference symbols 5

2 Identification 6

2.1 Product structure 6
2.2 Scope of delivery 6

3 Installation 7

3.1 Incoming acceptance, transport, storage . . . 7
3.2 Installation conditions 7
3.3 Installation instructions 8
3.4 Installation examples 10
3.5 Post-installation check 13

4 Wiring 14

4.1 Direct connection to the transmitter 14
4.2 Connection via junction box 14
4.3 Post-connection check 15

5 Device description. 16

5.1 Sensor design 16
5.2 Measuring principle 17
5.3 Calibration 17

6 Commissioning 20

6.1 Function check 20
6.2 Calibration 20

7 Maintenance. 21

7.1 Cleaning the sensor 21
7.2 Regenerating 22

8 Accessories 23

8.1 Connection accessories 23
8.2 Installation accessories 23
8.3 Measuring, monitoring and cleaning 23

9 Troubleshooting 24

9.1 Troubleshooting instructions 24
9.2 Sensor checks 24
9.3 Spare parts 25
9.4 Return 25
9.5 Disposal 26

10 Technical data 27

10.1 Input 27
10.2 Environment 27
10.3 Process 27
10.4 Performance characteristics 27
10.5 Mechanical construction 28

Index. 29

1 Safety instructions

1.1 Designated use

The oxygen sensor is suitable for continuous measurement of dissolved oxygen in water.

Typical applications are:
- Measuring, monitoring and regulating the oxygen content in activated sludge basins.
- Monitoring the oxygen content in the sewage treatment plant outlet.
- Monitoring, measuring and regulating the oxygen content in public waters and fish farming water.
- Monitoring of oxygen enrichment in drinking water.

Any other use than the one described here compromises the safety of persons and the entire measuring system and is, therefore, not permitted.
The manufacturer is not liable for damage caused by improper or non-designated use.

1.2 Installation, commissioning and operation

Please note the following items:
- Installation, electrical connection, commissioning, operation and maintenance of the measuring system must only be carried out by trained technical personnel.
  The technical personnel must be authorized for the specified activities by the system operator.
- Technical personnel must have read and understood these Operating Instructions and must adhere to them.
- Before commissioning the entire measuring point, check all the connections for correctness. Ensure that hose connections are not damaged.
- Do not operate damaged products and secure them against unintentional commissioning. Mark the damaged product as being defective.
- Measuring point faults may only be rectified by authorized and specially trained personnel.
- If faults cannot be rectified, the products must be taken out of service and secured against unintentional commissioning.
- Repairs not described in these Operating Instructions may only be carried out at the manufacturer’s or by the service organization.

1.3 Operational safety

The sensor has been designed and tested according to the state of the art and left the factory in perfect functioning order.
Relevant regulations and European standards have been met.

As the user, you are responsible for complying with the following safety conditions:
- Installation instructions
- Local prevailing standards and regulations.

1.4 Return

If the device requires repair, please send it *cleaned* to the sales center responsible. Please use the original packaging, if possible.

Please enclose the completed "Declaration of contamination" (copy the second last page of these Operating Instructions) with the packaging and the transportation documents. **No repair without completed "Declaration of contamination"!**

1.5 Notes on safety icons and symbols

Warning!
This symbol alerts you to hazards. They can cause serious damage to the instrument or to persons if ignored.

Caution!
This symbol alerts you to possible faults which could arise from incorrect operation. They could cause damage to the instrument if ignored.

Note!
This symbol indicates important items of information.

1.6 Cross-reference symbols

→ 1 This symbol stands for a cross-reference to a specific page (e.g. Page 1).

→ 2 This symbol stands for a cross-reference to a specific graphic (e.g. Fig. 2).

2 Identification

2.1 Product structure

	Certificate				
	A	Version for non-hazardous area			
		Cable length incl. extension cable			
		0	Cable length: 1.5 m / 4.9 ft		
		1	Cable length: 7.5 m / 23 ft		
		2	Cable length: 15 m / 49 ft		
		8	No cable (for replacement for TOP 68 version)		
		9	Special version upon request		
			Sensor head		
			F	Thread G1, fixed cable with SXP connector	
			S	Thread G1, TOP68 connector	
				Accessories	
				0	Without accessories
OOS61-					Complete order code

2.2 Scope of delivery

The following items are included in the delivery:
- Oxygen sensor with transport protection cap for membrane protection
- Operating Instructions, English

If you have any questions, please contact your supplier or your sales center responsible.

3 Installation

3.1 Incoming acceptance, transport, storage

- Make sure the packaging is undamaged!
  Inform the supplier about damage to the packaging.
  Keep the damaged packaging until the matter has been settled.
- Make sure the contents are undamaged!
  Inform the supplier about damage to the delivery contents.
  Keep the damaged products until the matter has been settled.
- Check that the scope of delivery is complete and agrees with your order and the shipping documents.
- The packaging material used to store or to transport the product must provide shock protection and humidity protection. The original packaging offers the best protection. Also, keep to the approved ambient conditions (see "Technical data").
- If you have any questions, please contact your supplier or your sales center responsible.

3.2 Installation conditions

3.2.1 Dimensions

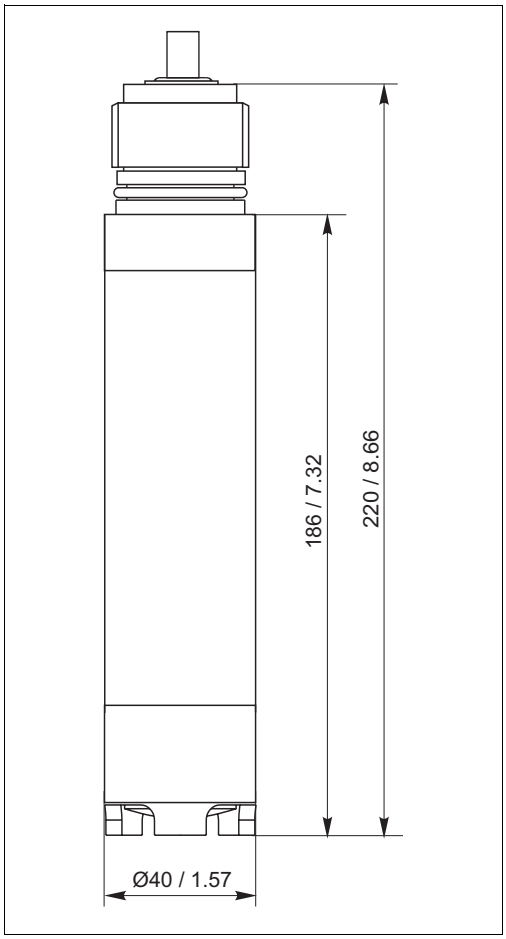

Fig. 1: Fixed cable version

3.2.2 Orientation

The sensor can be installed up to the horizontal in an assembly, support or a suitable process connection.
Other angles and overhead installation are not recommended. Reason: possible sediment formation and resulting falsification of measured value.

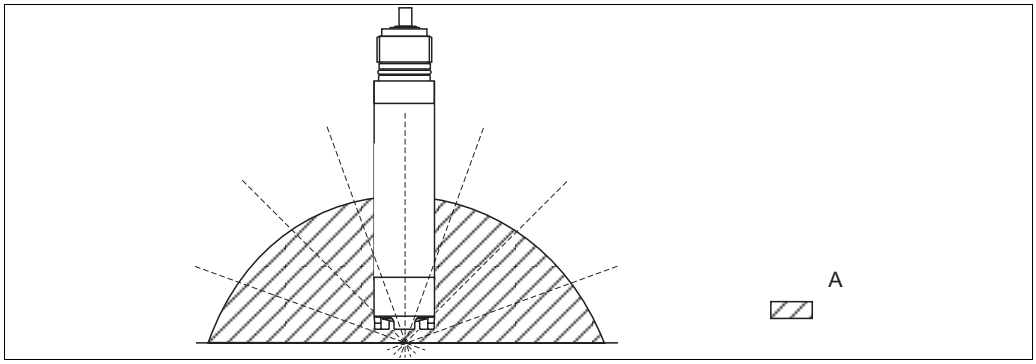

Fig. 3: Angle of installation

A Recommended angle of installation: 0 ... 180 ° best if 45°

Note!
Make sure you comply with the instructions for installing sensors. You will find them in the Operating Instructions for the assembly used.

3.2.3 Mounting location

- Select the installation location so that there is easy access for later calibration.
- Make sure that upright posts and assemblies are secured safely and vibration-free.
- For immersed operation in an activated sludge basin, select an installation location which produces a typical oxygen concentration.

3.3 Installation instructions

3.3.1 Measuring system

A complete measuring system comprises at least:
- Oxygen sensor
- Transmitter
- Special measuring cable if extension necessary
- Assembly,

Optional:
- Assembly holder for immersed operation
- Junction box (with cable extension)
- Automatic spray cleaning system

Do not dip the sensor completely into the tank.
The cable gland is not isolated.
For installations under water, the sensor must be mounted with immersion probe holder (PEC-E) that guarantees the impermeability of the cable gland.

Leakage of fluid in the gland irreparably damage the probe.

The cable must not be wet or submerged in the tank.

3.4.3 Retractable assembly

The assembly is designed for installation on tanks and pipes. Suitable nozzles must be available for this.

Install the assembly at places with constant flow. The minimum pipe diameter is DN 80.

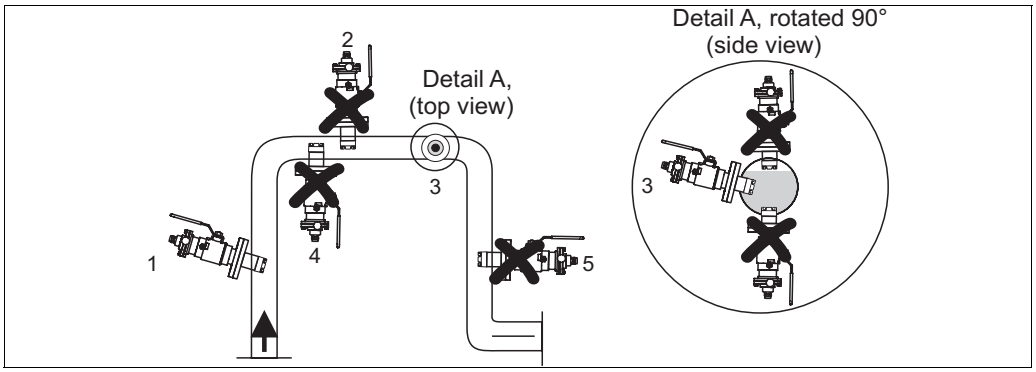

Fig. 13: Permissible and impermissible sensor installation positions

1 Ascending pipe, best position
2 Horizontal pipe, sensor top down, impermissible due to air cushion or foam bubble forming
3 Horizontal pipe, installation with permissible installation angle (acc. to sensor version)
4 Overhead installation, critical due to possible sediment buildup on fluorescence cap
5 Down pipe, impermissible

Note!
- Do not install the assembly at places, where air cushions or foam bubbles can be formed or where suspended particles can settle on the sensor optics (→ 13).
- Measuring errors can occur, if:
  – the sensor is not immersed into the medium
  – suspended particles are settled on the sensor membrane
  – the sensor is installed overhead.

3.5 Post-installation check

- Sensor and cable undamaged?
- Fluorescence cap undamaged?
- Compliance with permissible sensor installation position?
- Is the sensor installed in an assembly and is not suspended from the cable?
- Avoid moisture by rain by fitting the protective cap to the immersion assembly?

4 Wiring

Warning!
- The electrical connection must only be carried out by an electrical technician.
- The electrical technician must have read and understood the instructions in this manual and must adhere to them.
- Ensure that there is no voltage at the power cable **before beginning** the connection work.

4.1 Direct connection to the transmitter

4.1.1 Field installation

Connect the sensor directly to the transmitter by means of the special measuring cable with the SXP connector (→ 14).

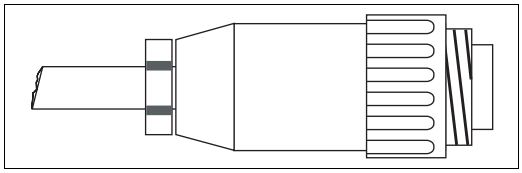

Fig. 14: SXP connector

4.1.2 Panel mounting

- Remove the SXP connector (transmitter side!) from the cable.
- Refer to the following table for the cable assignment and the assigned terminals for OOM223-WX/WS.
- Please note that the cable assignment changes depending on the sensor version (fixed cable or TOP68 connection).

Terminal COM223	Sensor with fixed cable (OMK)		Sensor with TOP68 connection (CYK71)	
	Core	Assignment	Core	Assignment
85	Yellow	$+U_B$	Yellow	$+U_B$
0	Gray	0 V	White	0 V
96	Pink	Comm. (digital)	Green	Communication (digital)
97	Blue	Comm. (digital)	Brown	Communication (digital)
88	Brown	$–U_B$	Coax, inner	$–U_B$

4.2 Connection via junction box

To extend the sensor connection beyond the length of the fixed cable, the connection has to take place using a junction box VS (→ 15, → 16).

Always connect the sensor cable to the junction box with the SXP connector.
The extension to the transmitter depends on the transmitter version, i.e. field device or panel-mounted instrument.

5 Device description

5.1 Sensor design

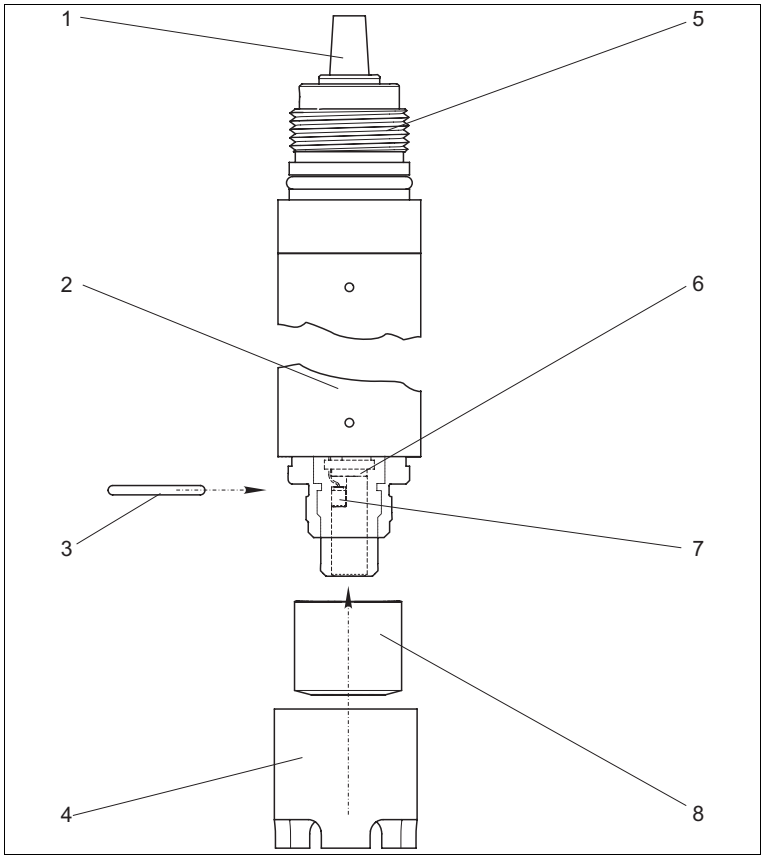

Fig. 17: Sensor design

1 Sensor cable
2 Sensor shaft
3 O-ring
4 Protection guard
5 Threaded connection
6 Detector
7 Emitter diode
8 Fluorescence cap

The sensor consists of the following function units:
- Sensor shaft
- Sensor head with optics (emitter and detector)
- Fluorescence cap
- Protection guard

Note!
- Alternatively to the protection guard, you can use a spray head OOR 3 (optional, see "Accessories") for use in immersed operation with cleaning function.

5.2 Measuring principle

5.2.1 Oxygen measurement based on the principle of fluorescence quenching

- Sensor design:
  - Oxygen-sensitive molecules (markers) are integrated in an optically active layer (fluorescence layer).
  - The surface of the fluorescence layer is in contact with the medium.
  - The sensor optics are directed at the underside of the fluorescence layer.
- There is an equilibrium between the oxygen partial pressure in the medium and that in the fluorescence layer:
  - If the sensor is immersed in the medium, the equilibrium is established very quickly.
- Measuring process:
  - The sensor optics send green light pulses to the fluorescence layer.
  - The markers "answer" (fluoresce) with red light pulses.
  - The duration and intensity of the response signals is directly dependent on the oxygen contents and the partial pressure.
  - If the medium is free from oxygen, the response signals are long and very intense.
  - Oxygen molecules "quench" the marker molecules. As a result, the response signals are shorter and less intense.
- Measurement result:
  - The sensor returns a signal that is in proportion to the oxygen concentration in the medium.
  - The fluid temperature and air pressure are already calculated in the sensor.

5.2.2 Fluorescence cap

The oxygen dissolved in the medium is diffused into the fluorescence cap.
Suitable flow is not necessarily mandatory but it does improve the speed at which the measuring system responds and ensures a more representative measured value compared to a measurement in static medium.
The cap is only permeable for dissolved gases. Other substances dissolved in the liquid phase e.g. ionic substances, will not penetrate through the membrane. Therefore, medium conductivity has no impact on the measuring signal.

5.3 Calibration

Calibration is a means of adapting the transmitter to the characteristic values of the sensor.

Normally, sensor calibration is seldom necessary. It is necessary after:
- Changing the fluorescence cap

Within the framework of system monitoring and supervision, for example, the calibration can also be cyclically monitored (at typical time intervals, depending on operating experience) or renewed.

Note!
Ideally, use the calibration vessel (see Accessories) for calibration.

5.3.1 Types of calibration

Types of calibration:
- Air (preferably saturated water vapor, e.g. near the water surface)
  - Measured values between 70 and 130 % SAT result in the calibration of the measured value at air
  - Measured smaller than 15 % SAT result in the calibration of the zero point
- Air-saturated water
  - Like air calibration

- Reference measured value (entry at transmitter, sensor remains in the medium).
  – Measured values between 50 and 150 % SAT result in the calibration of the measured value to the reference value while maintaining the zero point
  – Measured values smaller than 20 % SAT result in the calibration of the measured value to the reference value while maintaining the measured value at air

If necessary, calibrate:
- In the **air** (water-vapor saturated) type of calibration in order to calibrate the **measured value at air**.
- In the **air-saturated water** type of calibration, but while using **oxygen-free** water, (see "Sensor check" section), to calibrate the **zero point**.

5.3.2 Calibration intervals

1. If you want to calibrate the sensor in the meantime due to a special application and/or a special type of installation, you can determine the intervals with the following method:
2. Check the sensor one month after its being put into operation by taking it out of the fluid, drying it and then measuring the oxygen saturation index at air after 10 minutes.
   Decide using the results:
   a. If the measured value is not at 100 ±2 %SAT, you have to calibrate the sensor.
   b. Otherwise, double the length of time to the next inspection.
3. Proceed as per Point 1 after two, four and/or eight months. In this way, you can determine the optimum calibration interval for your sensor.

Note!
Be sure to calibrate the sensor at least once a year.

5.3.3 Calibration in air

1. Remove the sensor from the medium.
2. Clean the outside of the sensor with a damp cloth. Then dry the sensor membrane e.g. by using a tissue.
3. Then wait while the sensor adjusts to the temperature of the ambient air. This takes about 20 minutes. Check that the sensor is not in direct sunlight during this time.
4. If the measured value display on the transmitter is stable, carry out the calibration in accordance with the Operating Instructions of the transmitter.
5. Place the sensor in the medium again.

Note!
Make sure you comply with the instructions for calibration in the Operating Instructions of the transmitter.

5.3.4 Calculation example for the calibration value

As a check, you can calculate the expected calibration value (transmitter display) as shown in the following example (salinity is 0).

1. Determine:
   – the sensor temperature (ambient air)
   – the altitude above sea level
   – the current air pressure (**=rel. air pressure to sea level**) at the time of calibration. (If undeterminable, use 1013 hPa for an approximate calculation.)
2. Define:
   – the saturation value **S** acc. to the first table
   – the factor **K** acc. to the second table

° C	S [mg/l]
0	14.64
1	14.23
2	13.83
3	13.45
4	13.09
5	12.75
6	12.42
7	12.11
8	11.81
9	11.53
10	11.25

° C	S [mg/l]
11	10.99
12	10.75
13	10.51
14	10.28
15	10.06
16	9.85
17	9.64
18	9.45
19	9.26
20	9.08

° C	S [mg/l]
21	8.90
22	8.73
23	8.57
24	8.41
25	8.25
26	8.11
27	7.96
28	7.82
29	7.69
30	7.55

° C	S [mg/l]
31	7.42
32	7.30
33	7.18
34	7.06
35	6.94
36	6.83
37	6.72
38	6.61
39	6.51
40	6.41

Altitude [m]	K
0	1.000
50	0.994
100	0.988
150	0.982
200	0.977
250	0.971
300	0.966
350	0.960
400	0.954
450	0.949
500	0.943

Altitude [m]	K
550	0.938
600	0.932
650	0.927
700	0.922
750	0.916
800	0.911
850	0.905
900	0.900
950	0.895
1000	0.890

Altitude [m]	K
1050	0.885
1100	0.879
1150	0.874
1200	0.869
1250	0.864
1300	0.859
1350	0.854
1400	0.849
1450	0.844
1500	0.839

Altitude [m]	K
1550	0.834
1600	0.830
1650	0.825
1700	0.820
1750	0.815
1800	0.810
1850	0.805
1900	0.801
1950	0.796
2000	0.792

3. Determine:
   – **L** = current air pressure in bar (1013 hPa=1.013 bar, if unknown)
4. Calculate the calibration value **C**:

   $$\mathbf{C = S \cdot K \cdot L}$$

Example

- Air calibration at 18 °C, altitude 500 m above sea level, current air pressure 1009 hPa=1.009 bar
- S = 9.45 mg/l, K = 0.943, L = 1.009

Calibration value C = 9.17 mg/l.

6 Commissioning

6.1 Function check

Before first commissioning, check if:
- the sensor is correctly installed
- the electrical connection is correct.

If using an assembly with automatic cleaning, check the correct water connection at the assembly rinse connection.

⚠ Warning!
Danger of medium leaking off
Before applying compressed air to an assembly with cleaning facility, make sure the connections are correctly fitted. Otherwise, the assembly may not be insert into the process.

6.2 Calibration

The sensor is calibrated at the factory. A new calibration is only needed in special situations.

MDEOLUM

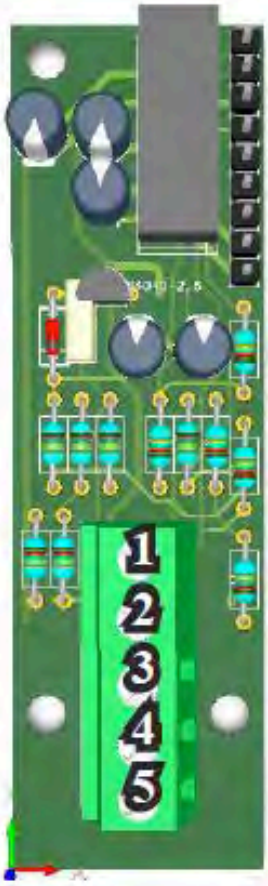

Connect "EOLUM" probe as follow:

1 Pink
2 Blue
3 Brown
4 Grey
5 Yellow

Note: probe has a built in temperature sensor.

If pobe is supplied with extra cable connect wires as follows:

1 Pink
2 White
3 Brown
4 Grey and Black
5 Yellow
Not connected blu wire (shield)

7 Maintenance

Maintenance work must be carried out at regular intervals. To ensure that it is carried out, we recommend you enter the maintenance dates into an operations logbook or in an operations calendar in advance.
The maintenance cycle primarily depends on the system, the installation conditions and the medium in which measurement is taking place.

The following activities must be carried out:
- Cleaning the sensor
- Check the measuring function:
  1. Remove the sensor from the medium.
  2. Clean and dry the membrane.
  3. After about 10 minutes, measure the oxygen saturation index in air (without recalibration).
  4. The measured value should be at 100 ± 4 % SAT
- If necessary, replace a defective membrane or one which cannot be cleaned any more.
- Recalibration
  (if desired or required)

7.1 Cleaning the sensor

The measurement can be corrupted by sensor fouling or malfunction, e.g.:
- Buildup on the fluorescence cap
  --> causes longer response times and a reduced slope under certain circumstances.

To ensure reliable measurement, the sensor must be cleaned at regular intervals. The frequency and intensity of the cleaning operation depend on the measuring medium.

Clean the sensor:
- before every calibration
- at regular intervals during operation as necessary
- before returning it for repairs.

Depending on the type of soiling, proceed as follows:

Type of soiling	Cleaning
Salt deposits	Immerse the sensor in drinking water or in 1-5% hydrochloric acid (for a few minutes). Afterwards, rinse it with copious amounts of water.
Dirt particles on the sensor body **(not cap!)**	Clean the sensor body mechanically with water and a suitable brush.
Dirt particles on the fluorescence cap	Clean the membrane with water and a soft sponge.

Caution!
After cleaning, rinse the sensor with copious amounts of clean water.

7.1.1 Cleaning the optics

The optics only need to be cleaned if medium has penetrated through a defective fluorescence cap.

To clean it, proceed as follows:

1. Unscrew the protection guard and fluorescence cap from the sensor head.
2. Carefully clean the optical surface with a soft cloth until the buildup is fully removed.

10 Technical data

10.1 Input

10.1.1 Measured value

Dissolved oxygen [mg/l, % SAT, hPa]
Temperature [° C, ° F]

10.1.2 Measuring range

with OOM 223/253:
0 ... 20 mg/l
0 ... 200 % SAT
0 ... 400 hPa

10.2 Environment

10.2.1 Storage temperature

–20 ... +70 °C at 95% relative air humidity, not condensing

10.2.2 Ambient temperature range

–5 ... 50 °C

10.2.3 Degree of protection

IP 68

10.3 Process

10.3.1 Process pressure

Max. permitted overpressure: 10 bar

10.3.2 Process temperature

–20 ... +60 °C

10.4 Performance characteristics

10.4.1 Response time

t_{90}: 60 s

10.4.2 Maximum measured error

±2 % of end of measuring range

10.4.3 Repeatability

±0.5 % of end of measuring range

10.4.4 Operating life of sensor cap

1 year (protect against direct sunshine)

10.5 Mechanical construction

10.5.1 Weights

For cable length 7 m (23 ft): 0.7 kg (1.5 lbs)
For cable length 15 m (49 ft): 1.1 kg (2.4 lbs)
With TOP68 connection: 0.3 kg (0.66 lbs)

10.5.2 Materials

Sensor shaft:	Stainless steel 1.4571 (AISI 316Ti)
Cap with fluorescence layer:	POM
Fluorescence layer:	Silicone

10.5.3 Process connection

G1

10.5.4 Sensor cable

Shielded 7-core fixed cable or double-shielded coaxial cable with 4 pilot wires (for TOP68 connection)

10.5.5 Cable connection to transmitter

- SXP connector (field device)
- Terminal connection (panel-mounted instrument)

10.5.6 Maximum cable length

Max. 100 m / 328 ft (including cable extension)

10.5.7 Temperature compensation

Internal

10.5.8 Interface

RS 485

Trouble-shooting

Trouble-shooting instructions

Problem	Check	Remedial action
No display, no sensor reaction	Mains voltage to the transmitter?	Connect mains voltage.
	Sensor connected correctly?	Set up correct connection.
	Coating on the fluorescence cap?	Clean the sensor.
	Medium flow available?	Create flow.
Displayed value too high	Temperature display clearly too low?	Check sensor, if necessary send sensor in for repair.
Displayed value too low		
	Sensor calibrated?	Recalibrate
	Medium flow available?	Create flow.
	Displayesd temperature clearly too high?	Check sensor, if necessary send sensor in for repair.
	Coating on the fluorescence cap?	Replace
	Fluorescence cap worn out?	Replace
Strong deviations in displayed value	Fluorescence cap damaged?	Replace fluorescence cap.
	EMC interference on the measuring system?	Remove outer screening of sensor and extension cable at terminal S. Cut measuring and signalling lines from h.v. power lines.

Make sure you comply with the instructions for troubleshooting in the Operating Instructions of the transmitter. If necessary, carry out a test of the transmitter.

Sensor checks

Only authorised and trained personnel may test the sensor!
You will also require a multimeter (voltage, resistance).

Check	Measure	Setpoint
Voltage inspection	With the sensor connected, test the operating voltage on the transmitter: COM2x3-WX/WS	between terminals 87 and 0: +8 V between terminals 88 and 0: –8 V
Slope inspection	Place the sensor in the air, and dry with a paper towel.	After 10 minutes: approx. 100% SAT (4 times plus-key)
Zero point inspection	Immerse the sensor in zero solution[1].	Display near to 0 mg/l (0% Sat)

[1] How to use the zero solution:

1. Fill a large beaker (1.5 - 2 l) with approx. 1 l of water.
2. Pour a cap-full of the zero solution into the water.
3. Immerse the sensor into the water and wait a sufficient period of time (15 min. for oxygen depletion).
   The display drops to around 0 mg/l (0 %SAT).

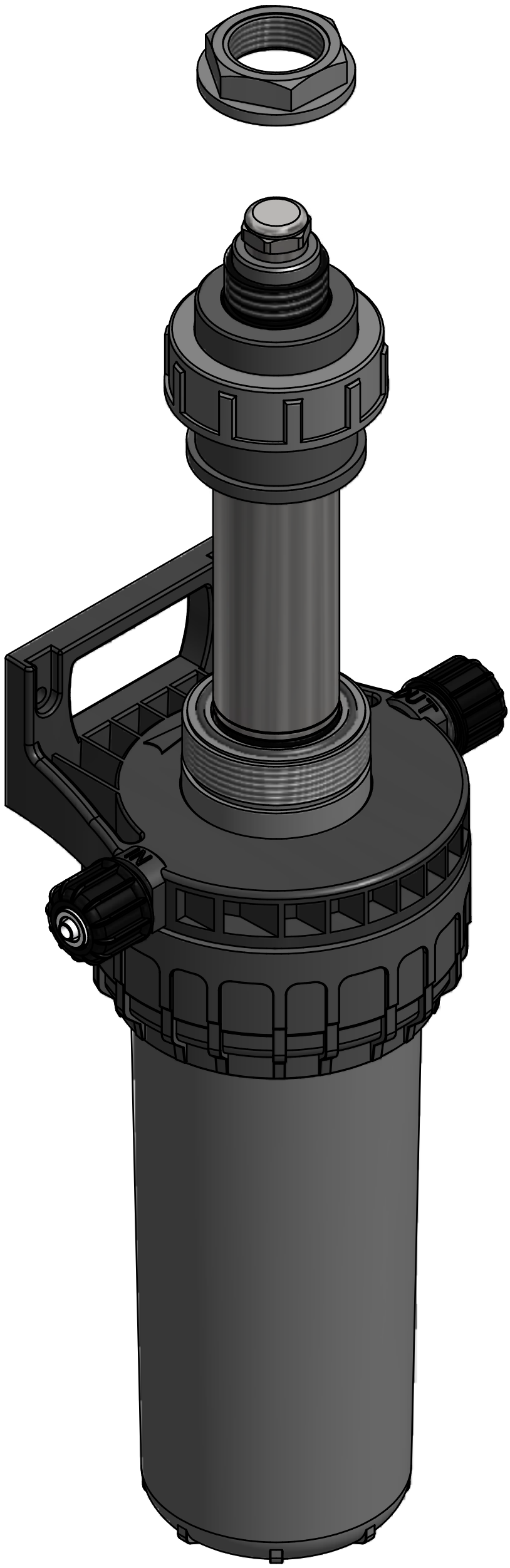
IN
OUT

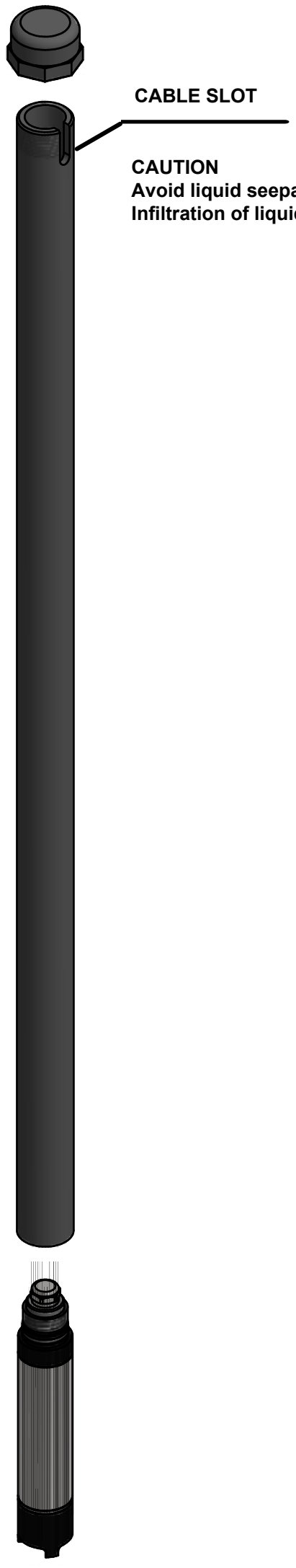

CAUTION
Avoid liquid seepage into cable slot.
Infiltration of liquid can damage irreparably the probe.

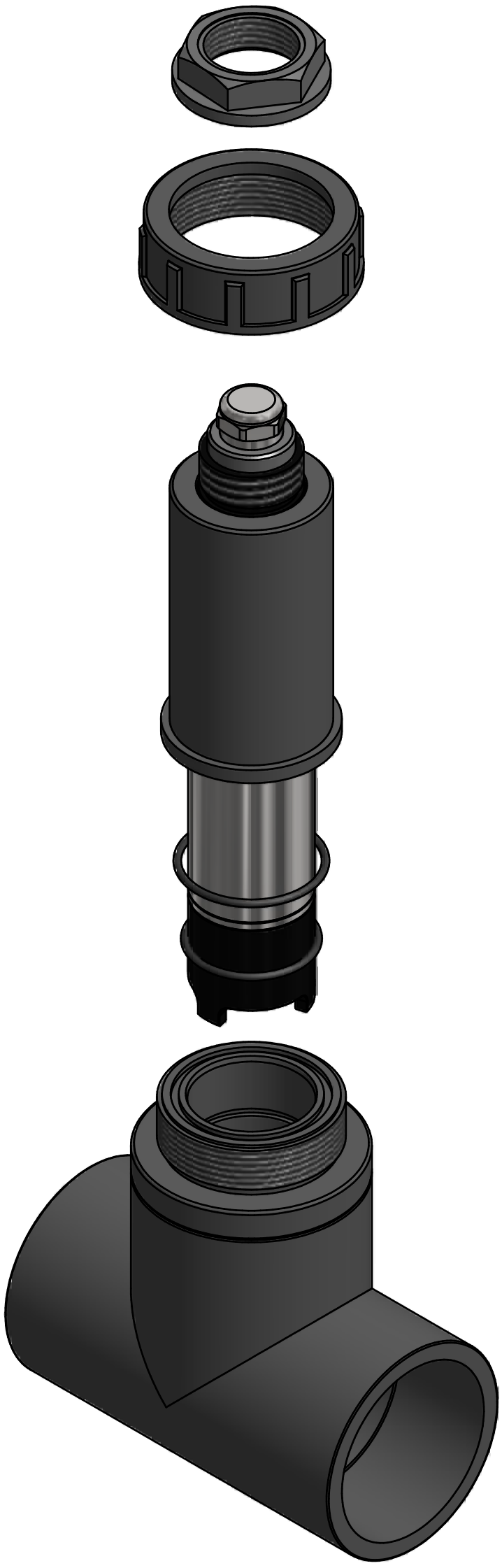

PRECAUTIONS RELATING TO DIRECTIVES, REGULATIONS AND STANDARDS

§ CE/EU and UKCA marking

We guarantee that this product meets the essential requirements of the applicable Directives and Regulations based on the following specifications. Please carefully consider the following specifications for use of the product in European Union member countries and the United Kingdom.

• CE/EU harmonized directives and standards

Directives

DIRECTIVE 2014/30/EU
DIRECTIVE 2011/65/EU
DELEGATED DIRECTIVE (EU) 2015/863

Harmonized standards

EN ISO 12100
EN IEC 61326-1
EN IEC 63000

• UKCA harmonized regulations and standards

Regulations

2008 2016 No. 1091
2012 No. 3032

Harmonized standards

BS EN ISO 12100
BS EN IEC 61326-1
BS EN IEC 63000

Disposal of end-of-life equipment by users

This symbol warns you not to dispose of the product with normal waste. Respect human health and the environment by giving the discarded equipment to a designated collection center for the recycling of electronic and electrical equipment. For more information visit the online site.

When dismantling a pump please separate material types and send them according to local recycling disposal requirements. We appreciate your efforts in supporting your local Recycle Environmental Program. Working together we'll form an active union to assure the world's invaluable resources are conserved.