ETORB2N
TURBIDITY PROBE

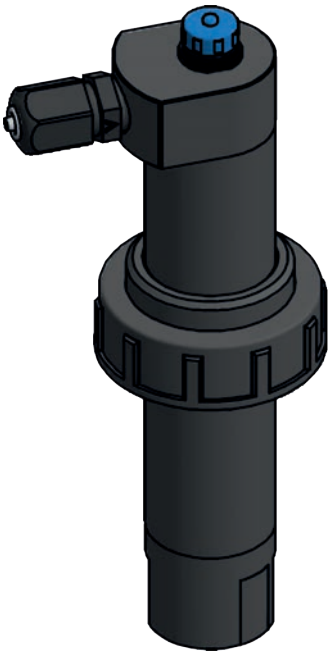

TURBIDITY

Turbidity is the measurement of water clarity. Suspended sediments, such as particles of clay, soil and silt, frequently enter the water from disturbed sites and affect water quality. Suspended sediments can contain pollutants such as phosphorus, pesticides, or heavy metals. Suspended particles cut down on the depth of light penetration through the water, hence they increase the turbidity -- or „murkiness“ or „cloudiness“ -- of the water.

ETORB2N is a turbidity probe made to operate out-of-the-box. Installer doesn‘t need any setup or calibration, just connect it to the controller. R2-05-21

ISO 7027 COMPLIANT

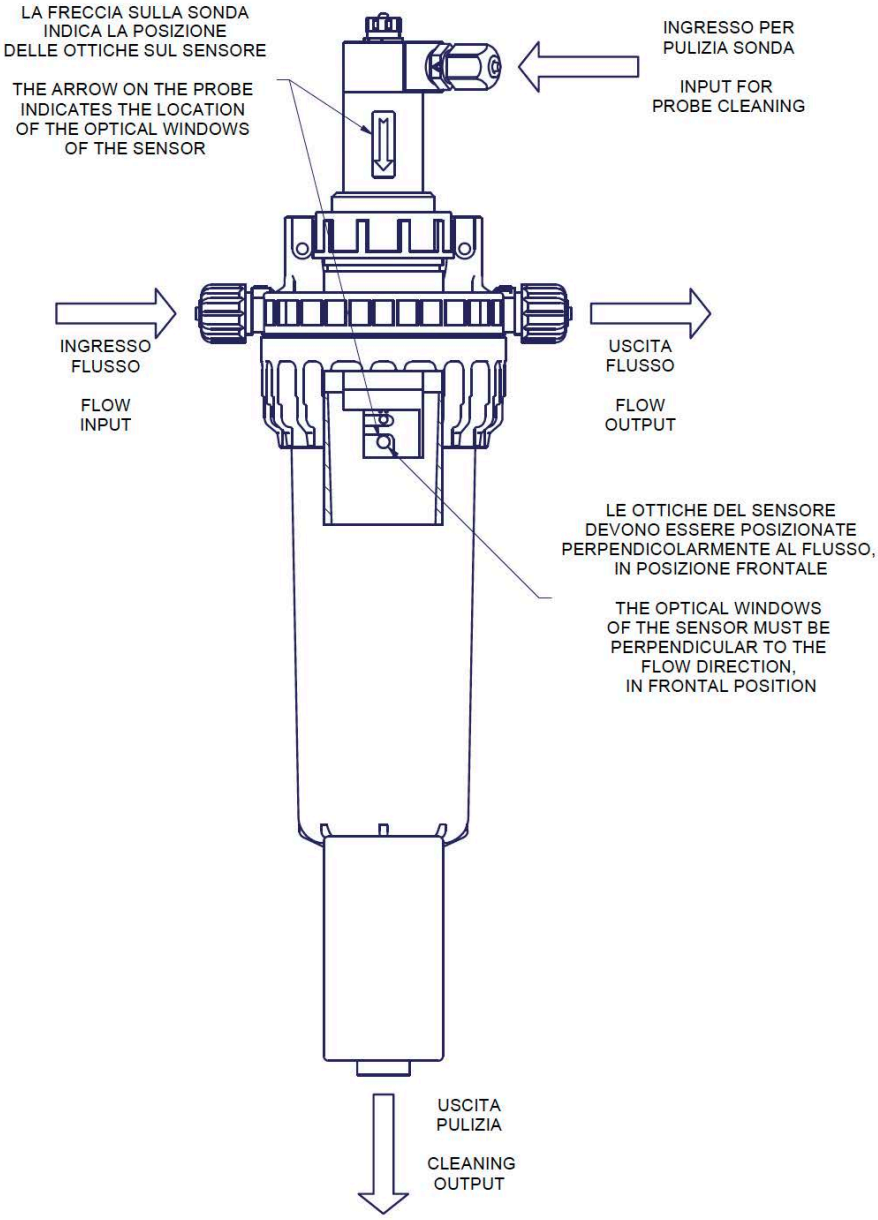

The water turbidity level can negatively affect the correc functioning of a plant. As with any water quality parameter, i is advisable to have historical data for any site where turbidit is monitored, so as to track trends and detect the occurrence of an event. For long-term continuous monitoring of turbidity a self-cleaning turbidity probe is usually required to avoic contaminating the sensor and maintaining accuracy. Turbidit readings are typically represented as nephelometric turbidit units (NTU) or formazine nephelometric units (FNUs) for mos in situ turbidity sensors. NTU is a unit of measurement that is used to represent verified turbidity readings using a IR ligh at a 90 degree detection angle. The probe combines all these features. The intelligent multi-function software on ou instruments allows the operator to accurately set the dosage required by the application. This allows you to enter the desired value and read it directly on the graphic display. Al operating modes are displayed clearly and simply through a large LCD display of all our instruments.

MAIN FEATURES

- Measurement system according to the 90° scattered light method.
- In-line cleaning system
- Cable with connector length 5 m.
- Factory calibrated (“plug and play”)

TECHNICAL SPECIFICATIONS

- Measurement system according to the 90° scattered light method.
- Plug and Play (no calibration needed)
- Cleaning system with in-line water input connector
- jMeasuring range 0 to 4000 NTU (Etorb2n)
- Max measured error ±5% measured value
- Repeatability < 2% measured value
- Nephelometric measuring principle 90° NIR scattered light
- Temperature 0 / +40° C (32/104°F)
- Max Pressure cleaning probe 1bar (14.5 PSI)
- Max working pressure 2bar (29 PSI)
- Connector G1
- Cable/connector G1
- Cable lenght 5 mt
- Sensor carrier plate, shaft: PVC
- Optical windows: Sapphire
- Temperature sensor
- Factory calibrated
- Probe holder friendly

ETORB2N
TURBIDITY PROBE

DIMENSIONS (mm)

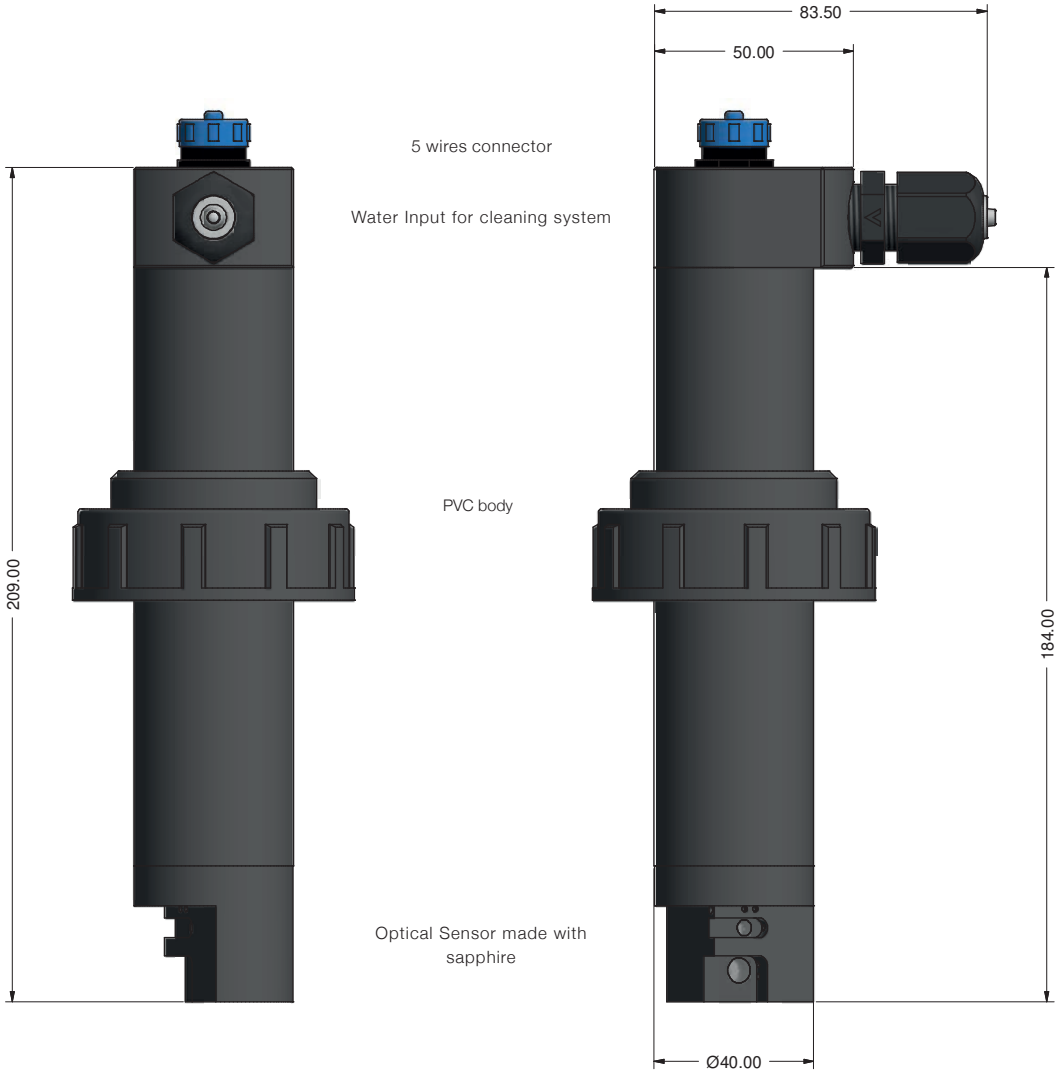

CONNECTION TO THE CONTROLLER

Controller Module

Probe Connector

Connect probe as follows:

Yellow (GND)
Blue (+) V
Brown (-) RS485
White (+) RS485
Green n/a

* Cleaning probe function must be configured within controller's "clean probe menu" option."Clean probe" relay output must be available to operate it.

PRECAUTIONS RELATING TO DIRECTIVES, REGULATIONS AND STANDARDS

§ CE/EU and UKCA marking

We guarantee that this product meets the essential requirements of the applicable Directives and Regulations based on the following specifications. Please carefully consider the following specifications for use of the product in European Union member countries and the United Kingdom.

• CE/EU harmonized directives and standards

Directives

DIRECTIVE 2014/30/EU
DIRECTIVE 2011/65/EU
DELEGATED DIRECTIVE (EU) 2015/863

Harmonized standards

EN ISO 12100
EN IEC 61326-1
EN IEC 63000

• UKCA harmonized regulations and standards

Regulations

2008 2016 No. 1091
2012 No. 3032

Harmonized standards

BS EN ISO 12100
BS EN IEC 61326-1
BS EN IEC 63000