# TURBINE PULSE EMITTER WATER METER

Data Sheet

R14-07-22

## FEATURES

- Threaded pulse emitter water meter for cold and hot water, single (mod. 15-20-25-30-40) and multiple (mod. 50) jet counter with wet or dry dial
- Thread sizes range: from 1/2" to 2"
- Brass case and head (except for 50mm 2" model with cast iron case and head)
- Working temperature: cold water up to 30° C, hot water up to 90° C (mod. CTCI)
- 2m cable length (RG58), equipped with BNC connector
- Reed contact with $10^9$ closing operations
- Max voltage 250 VAC, 200 VDC
- Max current 1.0 A
- Max power 10 VA
- Available water meter without pulse emitter
- U0-D0: no straight pipe runs are required upstream or downstream of the meter
- All models are MID approved in accordance with the applicable Directive (Module B+D), and compliant with EN 14154 and OIML R49 standard
- All models are certified for use with drinking water in accordance with D.M. 174

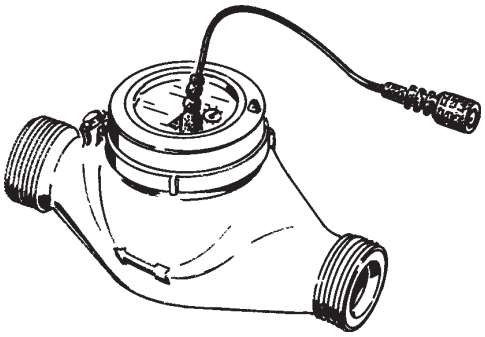

## Configuration Info

| MODELS | | |
|---|---|---|
| CTCI | "***CTCI***" | hot water pulse emitter water meter |
| CTFI | "***CTFI***" | cold water pulse emitter water meter |
| CTFIT | "***CTFIT***" | cold water pulse emitter water meter, PTFE internal and external coating |
| CTCIT | "***CTCIT***" | hot water pulse emitter water meter, PTFE internal and external coating |
| CTFIG | "CTFIG" | cold water pulse emitter water meter with pump "C" holder |
| CTCIG | "***CTCIG***" | hot water pulse emitter water meter with pump "C" holder |
| CATCI | "***CATCI***" | hot water pulse emitter water meter, dry dial |
| CATFI | "***CATFI***" | cold water pulse emitter water meter, dry dial |
| CATFT | "***CATFIT***" | cold water pulse emitter with dry dial with Teflon inside and outside |

Model CTCI. 015 0 04 L 0 2.5

| GAUGES | | |
|---|---|---|
| | inc | mm |
| *015* | 1/2 | 15 |
| *020* | 3/4 | 20 |
| *025* | 1 | 25 |
| *030* | 1.1/4 | 30 |
| *040* | 1.1/2 | 40 |
| *050* | 2 | 50 |

| CONNECTORS | |
|---|---|
| *0* | BNC |
| *1* | 2 wires |
| *3* | 2 wires (coaxial cable) |

| QUANTITY PER PULSES | |
|---|---|
| *L* | 1 litre |
| *D* | 10 litres |
| *C* | 100 litres |
| *M* | 1000 litres |

| PULSES PER LITRE |
|---|
| refer to the tables "Pulses per litre" |

Via Donatori di Sangue, 1 - 02100 Rieti (Italy)
+39 074622841 | emecpumps.com

Specifications subject to change without notice | R2025

emec SIMPLE AS WATER

IQNET CERTIFIED MANAGEMENT SYSTEM

qualityaustria SYSTEM CERTIFIED
ISO 9001:2015 No.07728/0
ISO 14001:2015 No.00997/0
ISO 45001:2018 No.01121/0

# TURBINE PULSE EMITTER WATER METER Data Sheet

## PULSES PER LITRE

| Pulses per liter table for CTFI / CTCI / CTFIT / CTCIT | | | | | | |
|---|---|---|---|---|---|---|
| Pulses for | Water Meter Caliber | | | | | |
| | 15 | 20 | 25 | 30 | 40 | 50 |
| 1 lt | 35 - 70 - 140<br>1-2-4 | 22.5 - 45 90<br>1-2-4 | 12 - 24 48<br>1-2-4 | 12 - 24 48<br>1-2-4 | 4.5 - 9 18<br>1-2-4 | 1-2-4 |
| 10 lt | 1-2-4 | 1-2-4 | 1-2-4 | 1-2-4 | 1-2-4 | 1-2-4 |
| 100 lt | 1-2-4 | 1-2-4 | 1-2-4 | 1-2-4 | 1-2-4 | 1-2-4 |
| 1000 lt | 1-2-4 | 1-2-4 | 1-2-4 | 1-2-4 | 1-2-4 | 1-2-4 |

| Pulses per liter table for CATFI / CATFIT / CATCI / CATCIT | | | | | | |
|---|---|---|---|---|---|---|
| Pulses for | Water Meter Caliber | | | | | |
| | 15 | 20 | 25 | 30 | 40 | 50 |
| 1 lt | 35 - 70 - 140<br>1-2-4 | 22.5 - 45 90<br>1-2-4 | 1-2-4 | 1-2-4 | 1-2-4 | 1-2-4 |
| 10 lt | 1-2-4 | 1-2-4 | 1-2-4 | 1-2-4 | 1-2-4 | 1-2-4 |
| 100 lt | 1-2-4 | 1-2-4 | 1-2-4 | 1-2-4 | 1-2-4 | 1-2-4 |
| 1000 lt | 1-2-4 | 1-2-4 | 1-2-4 | 1-2-4 | 1-2-4 | 1-2-4 |

## DIMENSIONS

| ***Gauge*** | | mm<br>***inch*** | 15<br>***1/2*** | 20<br>***3/4*** | 25<br>***1*** | 30<br>***1.1/4*** | 40<br>***1.1/2*** | 50<br>***2*** |
|---|---|---|---|---|---|---|---|---|
| ***Length withouth hose fittings*** | A | mm | 110 | 130 | 160 | 160 | 200 | 300 |
| ***Length with hose fittings*** | B | mm | 190 | 228 | 260 | 280 | 340 | 460 |
| ***Width*** | C | mm | 80 | 80 | 100 | 100 | 110 | 108 |
| ***Height*** | D | mm | 110 | 110 | 132 | 132 | 137 | 130,5 |
| ***Height from hose*** | E | mm | 24 | 24 | 34 | 34 | 42 | 50,5 |
| ***Weight with hose fitting*** | | Kg | 0,850 | 1,100 | 1,750 | 2,000 | 3,460 | - |
| ***CEE approval number*** | | | B93 320 01 | B93 320 02 | B97 320 03 | B97 320 04 | B99 320 11 | B02 320 13 |

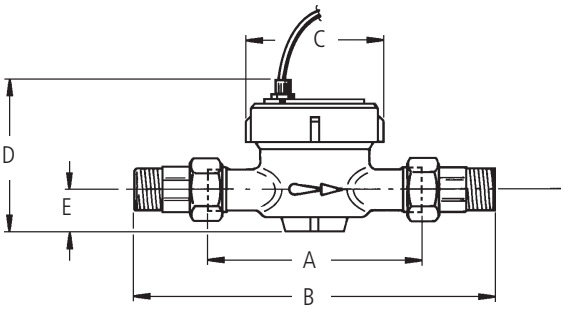


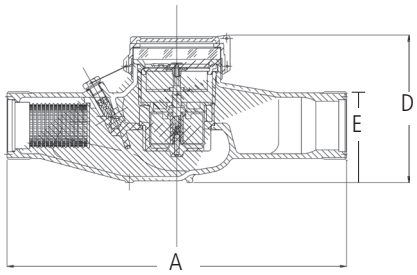


## FEATURES

| Gauge | mm<br>inch | 15<br>1/2 | 20<br>3/4 | 25<br>1 | 30<br>1.1/4 | 40<br>1.1/2 | 50<br>2 |
|---|---|---|---|---|---|---|---|
| Inertial breaking | l/h | 10 | 15 | 20 | 20 | 25 | 50 |
| Max temporary flow delivery | m³/h | 3 | 5 | 7 | 10 | 20 | 30 |
| Flow delivery with 10m of load loss | m³/h | 3 | 5 | 7 | 10 | 20 | 30 |
| Nominal flow rate | m³/h | 1.5 | 2.5 | 3.5 | 5 | 10 | 15 |
| First precision delivery ± 5% | l/h | 30 | 50 | 70 | 100 | 200 | 450 |
| Second precision delivery ± 2% | l/h | 120 | 200 | 280 | 400 | 800 | 3000 |
| Max operation pressure | bar | 16 | 16 | 16 | 16 | 16 | 16 |
| Minimum reading | l | 0.1 | 0.1 | 0.1 | 0.1 | 0.1 | 0.5 |
| Maximum reading | m³ | $10^5$ | $10^5$ | $10^5$ | $10^5$ | $10^5$ | $10^6$ |
| Turbine revs per liter | g/l | 34.8 | 22.5 | 11.7 | 11.7 | 4.5 | 3.16 |

ERROR CURVE

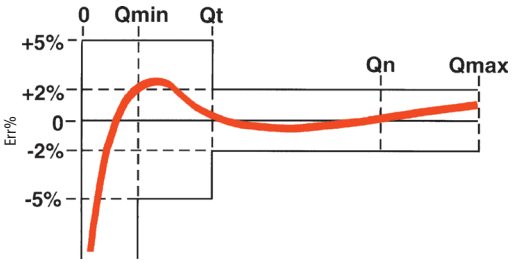


LOAD LOSS DIAGRAM

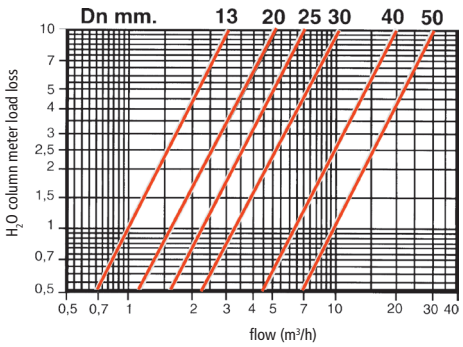


Via Donatori di Sangue, 1 - 02100 Rieti (Italy)
+39 074622841 | emecpumps.com

Specifications subject to change without notice | R2025

emec SIMPLE AS WATER

IQNET CERTIFIED MANAGEMENT SYSTEM

qualityaustria SYSTEM CERTIFIED
ISO 9001:2015 No.07728/0
ISO 14001:2015 No.00997/0
ISO 45001:2018 No.01121/0