R990525

AMS DIGITAL - AMSA DIGITAL - AMS DIGITAL LPV

PRODUCT LABEL

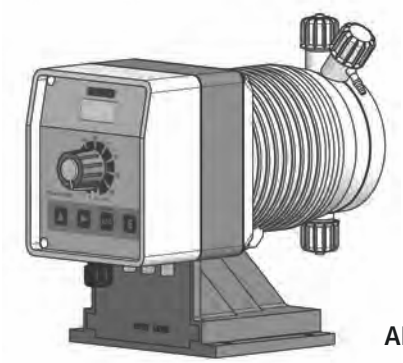

AMS DIGITAL

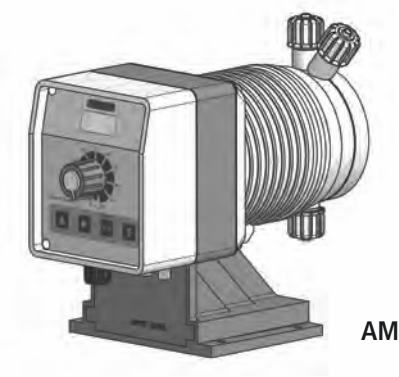

AMSA DIGITAL

SOLENOID DRIVEN METERING PUMPS
WITH DIAPHRAGM

EN

OPERATING MANUAL

This operating instructions contains safety information that if ignored can endanger life or result in serious injury.

Read these instructions **carefully** before use and keep them for future reference. Original instruction.

Information and specifications on this manual could be uncorrect or could have printing error . Specifications are subject to change without notic .

Version: R1-02-16

Product Description *Descrizione Prodotto*	Electromagnetic dosing pump, AMS series *Pompa dosatrice elettromagnetiche, serie AMS*		
Product Identification Codes (the "_" symbols complete the product code based on the configuration of the variants) *Codici Identificativi Prodotto* *(i simboli "_" completano il codice del prodotto in base alla configurazione delle varianti)*	AMF _____ APH _____ ARH _____ AMU _____ ACP _____ AUO _____	AAF _____ AAA _____ AAR _____ AAU _____ AAL _____ AAC _____	AMC _____ ALA _____ AOA _____

GENERAL SAFETY GUIDELINES

Operating, installing, or maintaining the unit in any way that is not covered in this manual could cause death, serious personal injury, or damage to the equipment.

ICON

This manual use the following safety message icon:

Danger!
Indicates a hazardous situation which, if not avoided, will result in death or serious injury.

Warning!
Indicates a hazardous situation which, if not avoided, could result in death or serious injury.

Important - A practice not related to personal injury or additional information.

Cross reference - An instance which refers to related information elsewhere in the same document

PURPOSE OF USE AND SAFETY

METERING PUMP IS INTENDED FOR CHEMICAL DOSING AND DRINKING WATER TREATMENT.

Do not use in explosive area (EX).
Do not use with flammable chemicals.
Do not use with radioactive chemicals.

Use after a proper installation.

Use the pump in accordance with the data and specifications printed on the label.

Do not modify or use in a manner inconsistent with the provisions of the operating manual.

Keep the pump protected from sun and water. Avoid water splashes.

In emergencies the pump should be switched off immediately. Disconnect the power cable from the power supply.

When using pump with aggressive chemicals observe the regulations concerning the transport and storage of aggressive fluids.

When installing always observe national regulations.

Manufacturer is not liable for any unauthorized use or misuse of this product that may cause injury, damage to persons or materials.

Pump must be accessible at all times for both operating and servicing. Access must not be obstructed in any way.

Feeder should be interlocked with a no-flow protection device.

Pump and accessories must be serviced and repaired by qualified and authorized personnel only.

Before any operation:
- **always read chemical Material Safety Data Sheet (MSDS);**
- **always wear protective clothing;**
- **always discharge the liquid end before servicing the pump.**
- **empty and rinse the liquid end before work on a pump which has been used with hazardous or unknown chemicals.**

This equipment requires regular maintenance to ensure potability requirements of the water and maintenance of improvements as declared by the manufaturer.

ENVIRONMENTAL SAFETY

Work area
Always keep the pump area clean to avoid and/or discover emissions.

Recycling guidelines

EWC code: 16 02 14

Always recycle according to these guidelines:
1. If the unit or parts are accepted by an authorized recycling company, then follow local recycling laws and regulations.
2. If the unit or parts are not accepted by an authorized recycling company, then return them to the nearest representative.

Waste and emissions regulations
Observe these safety regulations regarding waste and emissions:
- Dispose appropriately of all waste.
- Handle and dispose of the dosed chemical in compliance with applicable environmental regulations.
- Clean up all spills in accordance with safety and environmental procedures.
- Report all environmental emissions to the appropriate authorities.

LABEL

Fig. 1. Product label.

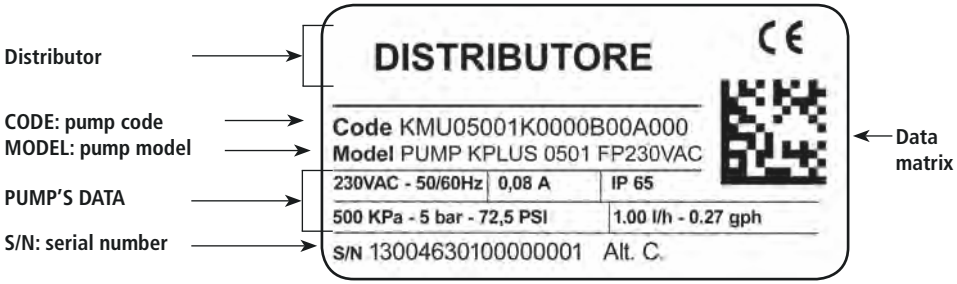

SPARE PARTS

For spare parts orders or any other communication, refer to the pump's label.
Code (CODE) and serial number (S / N) uniquely identify the pump.

TRANSPORTATION AND STORAGE

A not suitable transportation or storage can cause damages.

Use origianal box to pack the pump.

Observe storage conditions also for transportation.

Although packed, always protect the unit against humidity and the action of chemicals.

Before return the dosing pump to the manufacturer Repair service, drain the chemical from pump head and rinse it. Refer to **Shutdown procedure.**

Fill the PRODUCT SERVICE REPAIR FORM and send it with the dosing pump.
Repair service is not accepted if PRODUCT SERVICE REPAIR FORM is missing.

DO NOT TRASH PACKAGING. USE IT TO RETURN THE PUMP.

Transportation and storage temperature ..... 10 - 50°C (32 - 122°F)
Umidity ..... 95% relative humidity (not condensed)

1. Introduction

1.1 Introduction

Metering Pumps "AMS DIGITAL" Series are the ideal solution for low / middle dosing of chemicals.
All control and setup parameters are available through a digital keyboard and they are displayed on a LCD backlit display.

Note: some functions described into this manual may need accessories not included into the pump packaging.

1.2 Pump's capacity

Flow rate is determined by the stroke length and by the stroke speed. The stroke length is adjustable from 0 to 100% using the stroke length adjustment knob. However dosin accuracy is guarantee within an adjustment range from 30% to 100%.

1. 3 Models

AMS PH Proportional pump driven by internal built-in pH meter (0-14pH) and level control, supplied without pH electrode.
AMS RH Proportional pump driven by internal built-in Redox meter (0-1000mV) and level control, supplied without Redox electrode.
AMS EXT / 485 Remote controlled AMS EXT pump via RS485.

1.4 AMS Flow

Pressure bar	Flow l/h
25	05
15	10
10	15
07	20
03	40
02	60

1.5 AMSA (self-venting) flow

Pressure bar	Flow l/h
25	3.2
15	06
10	10
07	13

1.6 AMS LPV: viscosity up to 8.000 cPs

AMS LPV is the AMS version with PMMA pump head for **liquids with max viscosity 8.000 cPs.**
Funtioning mode is the same as AMS.
Flow may change according to viscosity. Flow rates indicated refer to a measure with water.
Liquid ends: 3/4" injection valve, 16x22 PVC suction hose and 8x12 PE injection hose.
Not included: Stainless steel foot filter with valve.

Legend:

a. Alternating Current; ~

b. DC, ⎓

c. Protective Earth; ⏚

d. Standby; ⏻

e. Warning - ⚠

2. Unpacking

QUANTITY	STANDARD CONTENT	**AMS**	**AMSA**	**AMS LPV**
n. 4	ø6 dibbles	●	●	●
n. 4	4,5 x 40 self tapping screws	●	●	●
n. 1	5 X 20 delayed fuse	●	●	●
n. 1	level probe with axial foot filter (PVDF)	●	●	
n. 1	0,3 bar injection valve (PVDF)	● 1/2"	● 1/2"	● 3/4" SS BALLS
m 2	delivery hose [1]	● PVDF	● PVDF	● PE
m 2	suction hose [1]	● PE	● PE	● PVC
m 2	venting hose	● PVC		
m 0,3	priming hose and syringe			● PVC
m 2,5	stand-by/alarm cable	●	●	●
n.1	operating manual	●	●	●

[1] If hose is 6x8 there is only a 4meters long hose. Cut to obtain suction and delivery hoses.

PLEASE DO NOT TRASH PACKAGING.
IT CAN BE USED TO RETURN THE PUMP.

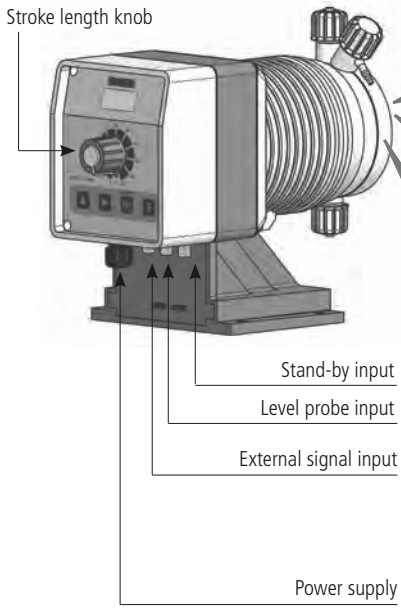

AMS - detail on pump head with manual venting

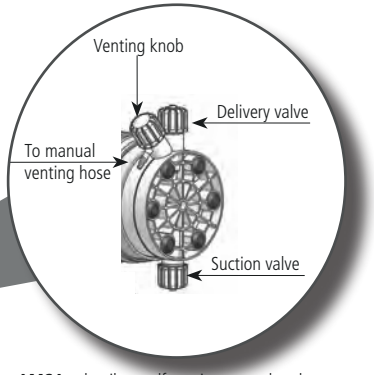

AMSA - detail on self venting pump head

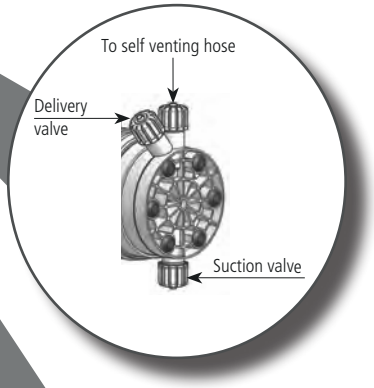

AMSA - detail on self venting pump head mod. SA and TA

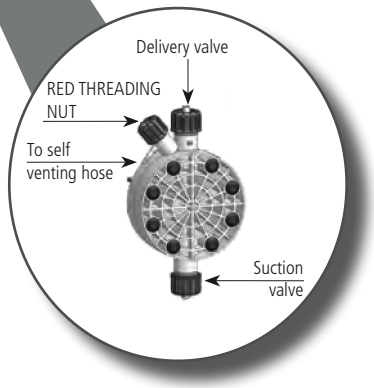

Manual stroke length adjustment

Max cc/stroke (**Construction Materials and Technical info**) are referred to cc/stroke with stroke length knob on 100%.
The stroke length knob adjusts the pump capacity. Press and rotate the knob when the pump is powered.

Dosing accuracy is guarantee within an adjustment range from 30% to 100%.

Note:if knob isn't on 100% position then the pump will dose at pressure greater than the one declared on label.

4. Before to Install warnings

Pump's installation and operativity is made in 4 main steps:

Pump's installation
Hydraulic Installation (hoses, level probe, injection valve)
Electrical Installation (main power connection, priming)
Programming the pump.

Before to start, please read carefully the following safety information.

Protective clothes

Wear always protective clothes as masks, gloves, safety glasses and further security devices during ALL installation procedure and while handling chemicals.

Installation location

Pump must be installed in a safety place and fixe to the table / wall to avoid vibration problems!

Pump must be installed in a easy accessible place!

Pump must be installed in horizontal position!

Avoid water splashes and direct sun!

Hoses and Valves

Suction and delivery hoses must be installed in vertical position!
All hoses connections must be performed using only hands' force!
No tongs required!

Delivery hose must be firmly fixed to avoid suddenly movements that could damage near objects!

Suction hose must be shorter as possible and installed in vertical position to avoid air bubbles suction!

Use only hoses compatibles with product to dose! See chemical compatibility table. If dosing product is not listed please consult full compatibility table or contact chemical's manufacturer!

Feeder should be interlocked with a no-flow protection device to automatically shut-off the pumps when there is no flow!

Adequate measures shall be taken to prevent cross connection of chemicals!

Chemical feeding must be stopped during backwash cycles and periods of noflow as these conditions may introduce the potential for chemical overdosing. Not doing so may result in elevated chemical concentrations and hazerdous gas introduction into the pool or spa.

5. Installation draw

Pump must be installed in a stable support (for example a table) at a maximum height (**from tank's bottom**) of **1,5 meters**.

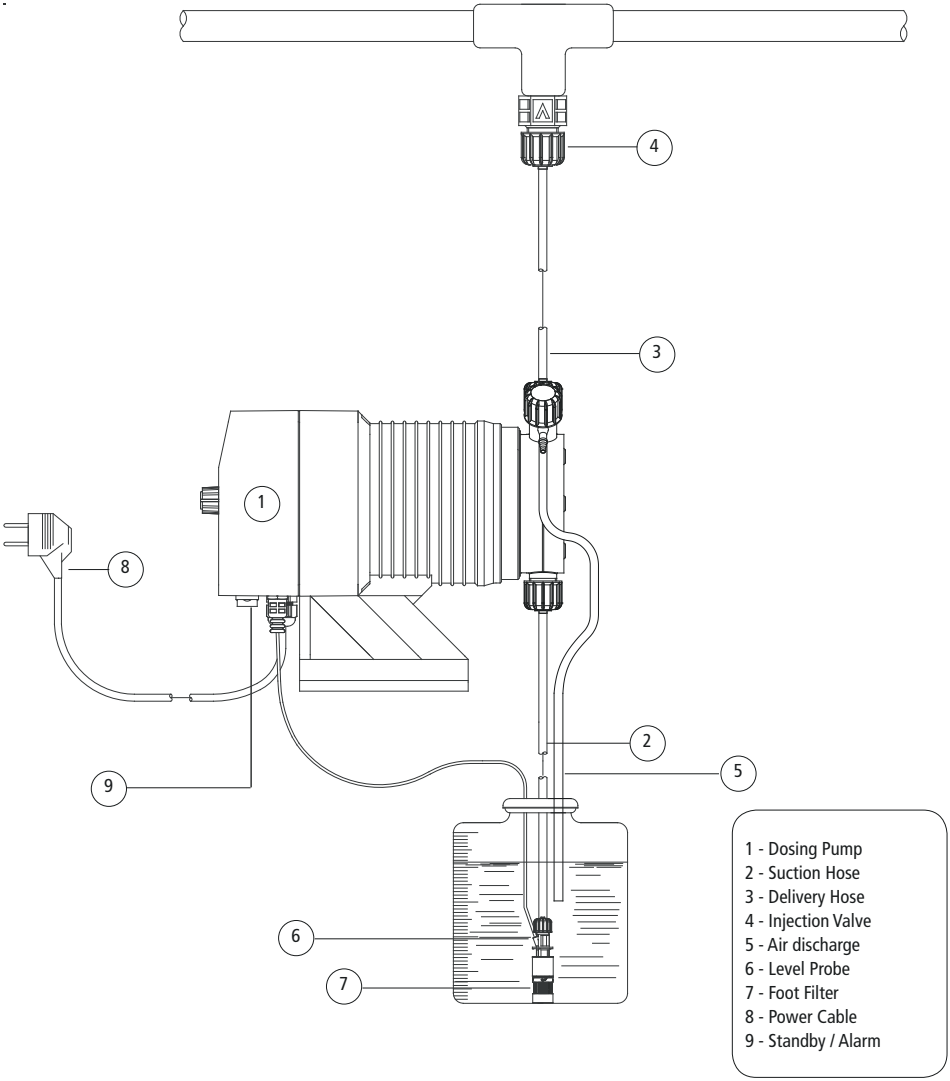

6. Hydraulic installation

Hydraulic connections are:

Suction Hose with level probe and foot filte
Delivery Hose with injection valve
Venting hose

Suction Hose.

Completely unscrew tightening nut from pump's head and remove assembling components: tightening nut, holding ring and pipe holder.

Assembly as shown in fig (A). Insert hose into pipe holder until it reaches the bottom.

Lock hose on pump's head by screwing down the tightening nut.
Use only hands to do it!

Connect other side of the hose to the foot filter using the sa e procedure.

fig (A)

Assembling foot filter with level probe.

Level probe must be assembled with foot filter using the pro ided kit.
Foot valve is made to be installed into tank's bottom without sediments priming problem.

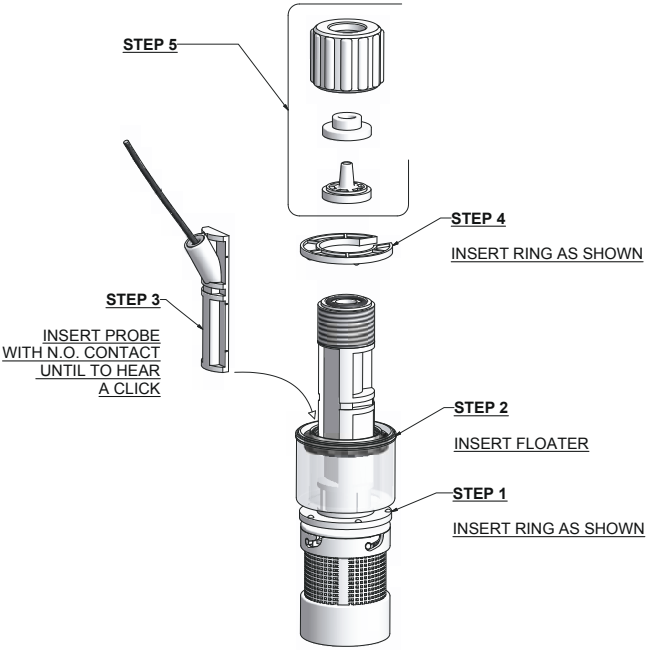

Connect BNC from level probe into pump's level input (front side of the pump).
Put level probe assembled with foot filter into tank s bottom.

Warning: If there is a mixer installed into tank, install a suction lance instead of level probe / foot filter.

Delivery Hose.

Completely unscrew tightening nut from pump's head and remove assembling components: tightening nut, holding ring and pipe holder.

Assembly as shown in fig (A). Insert hose into pipe holder until it reaches the bottom.

Lock hose on pump's head by screwing down the tightening nut.
Use only hands to do it!

Connect other side of the hose to the injection valve using the same procedure.

Injection Valve.

Injection valve must be installed on plant from water's input.
Injection valve will open at pressure greater than 0,3bar.

Venting hose.

Insert one side of venting hose into discharge connector as shown in fig (C)

Insert other side of venting hose into product's tank.
During priming procedure product exceeding will flow into t nk.

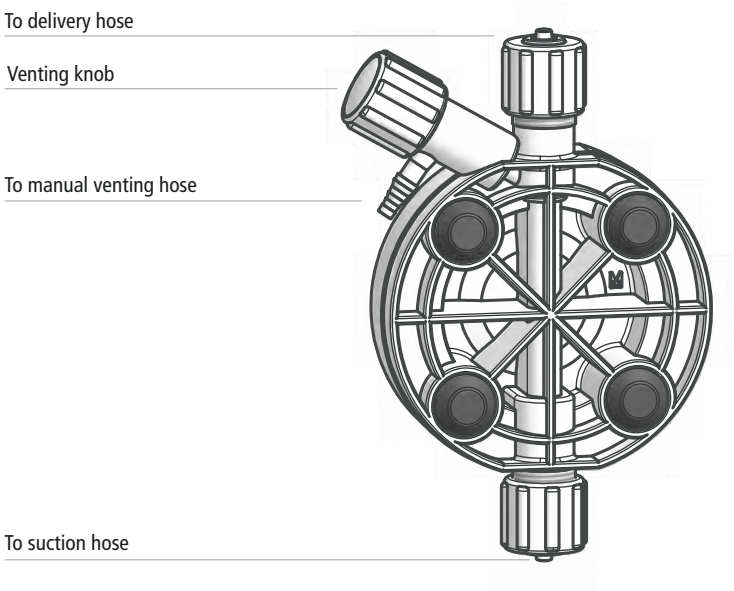

fig (C)

For priming procedure see **PRIMING**.

it's allowed to lightly bend venting hose.

During calibration procedure ("TEST") insert venting hose into BECKER test-tube.

7. Self-Venting pump head installation

Self-venting pump head must be used when using chemicals that produce gas (i.e. hydrogen peroxide, ammonium, sodium hypoclorite at particular conditions).
Refer to fig. 4-5 for delivery and venting hose.
Hoses assembling procedures are the same described before.

Fig. 3. Self-venting models pump head: LA, MA, NA (AMSA).

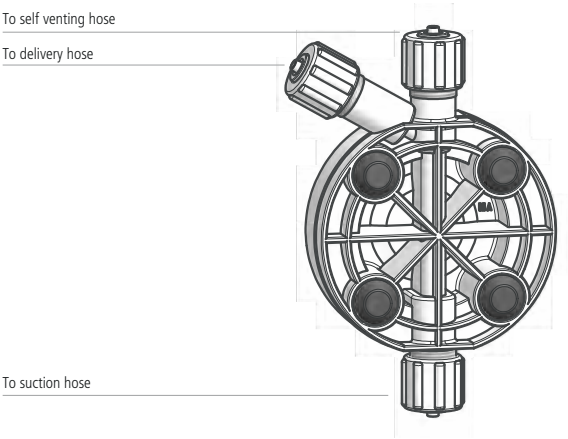

Fig. 4. Self-venting models pump head: SA, TA (AMSA).

ON "SA" AND "TA" MODELS THERE IS A RED THREADING NUT

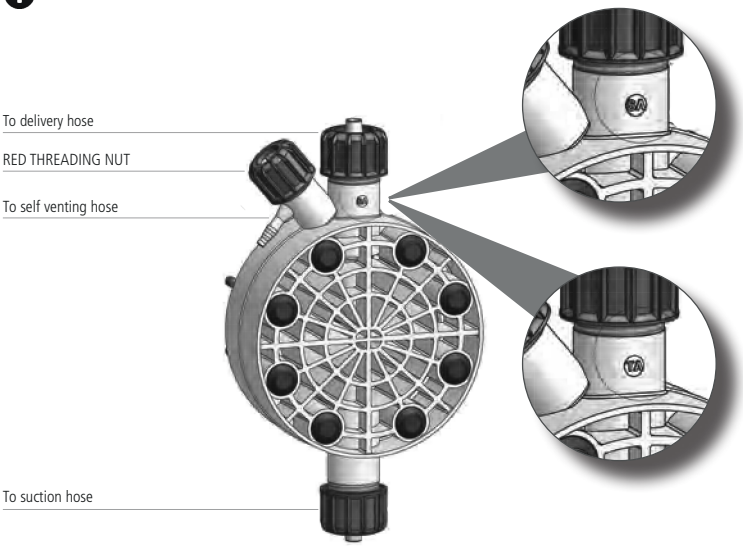

8. Electrical Installation

All electrical connections must be performed by **AUTHORIZED AND QUALIFIED** personnel only.
Before to proceed, please, verify the following steps:

- verify that pump's label values are compatible with main power supply.

- pump must be connected to a plant with a differential switch (0,03A sensitivity) if there isn't a good ground.

- to avoid damages to the pump do not install it in parallel with heavy inductance load (for example: engines). A relay switch must be used. See below picture.

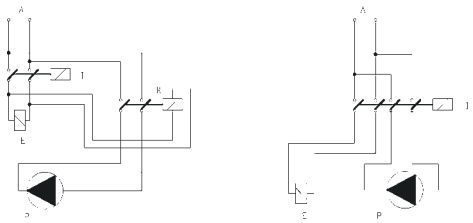

P - Dosing Pump
R - Relay
I - Switch or safety device
E - Electrovalve or inductance load
A - Main Power

- On pump's mother board there is a further protection against over voltages (275V - 150V) and distribution line noises (4KV for max 50µsec) as shown:

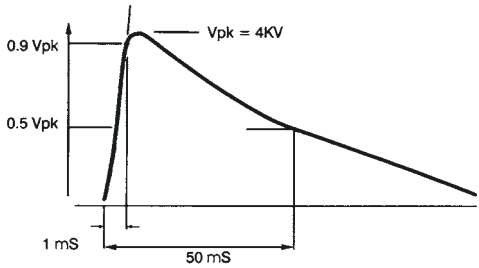

Once verified previous steps proceed as follows

- check that "BNC" of level probe has been connected as described in "Hydraulic Installation" chapter.

- connect "BNC" and external signal to pump's "INPUT" connectors.

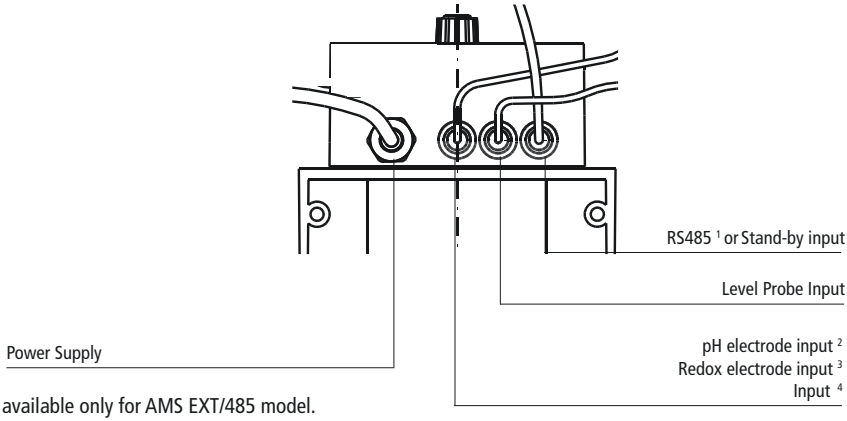

[1] RS485 available only for AMS EXT/485 model.
[2] Mod. AMS PH
[3] Mod. AMS RH
[4] Mod. AMS EXT/485

WARNING
IF EQUIPMENT <u>IS SUPPLIED</u> WITH A PLUG:

If an appliance coupler or separable plug is used as the disconnecting device, it shall be readily identifiable and easily reached by the operator. For single-phase portable equipment, a plug on a cord of length not greater than 3m is considered to be easily reached.

WARNING
IF EQUIPMENT <u>IS NOT SUPPLIED</u> WITH A PLUG:

a) a switch or circuit-breaker shall be included in the building installation
b) it shall be in close proximity to the equipment and within easy reach of the operator
c) it shall be marked as the disconnetting device for the equipment

9. Priming - level alarm - threshold value

9.1 PRIMING

To prime the pump without touching chemicals please do as follow:

- connect all hoses into proper places (delivery hose, suction hose, outgassing hose).
- open outgassing valve and turn on the pump.
- set pump's single injection at 100% and pulses at 50%.

All air inside the pump head will exit through the outgassing outlet. When product will leak from it, close immediately the outgassing valve. If dosing product is particularly dense, to facilitate the priming, insert on vent pipe a syringe of 20 cc and suck inside.

9.2 LEVEL ALARM

All "AMS Digital" series pump are provided with a liquid level alarm to indicate if product tank is empty. The level probe is connected to the right BNC plug on pump's bottom panel. The level probe is made of a N.O. reed contact (10VA, 1A max, 230Vac max) closed by a floating magnet housed in a (PP) plastic box. When the product level goes below the minimum the magnet closes the reed contact. The pump stops and the red LED on pump's front panel indicates the alarm status.

ENSURE PUMP LEVEL SWITCH AND PH OR ELECTRODE CONNECTIONS (LATTERS ONLY WHEN IN USE). REFER TO PAGE 13: IN CASE OF UNCORRECT CONNECTIONS, ELECTRODE COULD BE DAMAGED.

9.3 THRESHOLD VALUES

All pump inputs are protected and can withstand overload as previously indicated. Closing REED contact or other similar types, the maximum input frequency is 100 Hz or 10 mS. Pump Input impedance varies according selected operation mode: mA mode Rin=100 ohm; V mode and Mv mode=100 Kohm.

10. Basic settings

10.1 "START/STOP" - PRIMING BUTTON

This allows to **start** or **stop** pump programmed operations as well as to **prime** the pump. Pressing this button, while the pump is working, will display **OFF** (flashing) Continuing to press the button **"START-STOP"** while **OFF** is showing, will change the display into **MAN**, and the pump will deliver 80 strokes. During all this time, the external input signal is **off**. Releasing the button pump will return the pump to the original programmed operations.

10.2 INFORMATION ON DISPLAY

[**LO VI**]
When power supply voltage drops below the permissible minimum, **minimum allowed being** 92Vac (for 115Vac version) or 184Vac (for 230Vac version), pump will stop and display will show [LO VI], meaning LOW VOLTAGE INPUT.

[**HI VI**]
When power supply voltage increases above permissible maximum, **maximum allowed being** 134Vac (for 115Vac version) or 268Vac (for 230Vac version), pump will stop and display will show [HI VI], meaning HIGH VOLTAGE INPUT.

[**SYNC**]
Every time pump is powered by the main electrical supply, display shows [**SYNC**] for 1 second. The message indicates that the microprocessor is analysing power supply frequency. This auto-analysis operation, along with power supply verification ensure the best and most accurate results in dosing operation, frequency or voltage fluctuation .

[TANK LEVEL]
Level probe signals when additive level in the tank is below allowable height. The pump therefore stops. Display will show **[TANK LEVEL]**. Once additive level is restored, message is turned-off and pump will restart.

[DATA ERROR]
It appears every time there has been a mistake in programming. Re-enter the **programming mode** and follow instructions.

[MEM ERROR]
Indicates a problem with microprocessor memory. **For assistance, please contact EMEC service department or any other authorized personnel.**

[MAN]
Operator is priming the pump.

[OFF]
Pump is OFF.

[RANGE]
Input signal is not received or **beyond programming threshold values**.

11. AMS EXT / RS485 model

AMS "EXT/RS485 " MODEL

On demand the pump can be supplied with **serial interface**, installed in the pump electronic circuit. **Specific requests are accepted when ordering.** RS485 transmission provides serial connection and requires two wires and screen. Using a 120 Ohm impedance-line, perfectly balanced, it is possible to connect up to 1 Km distance without intermediate amplifier . A maximum of 20 pumps can be connected on the same line without intermediate amplifier . The line needs as terminal-closing a resistance of 120 ohm, 1/2 Watt. Pump running with serial programming responds only when required. The reply message contains all data shown on the display (see paragraph "Display Information"), including the number of the pulses released by the pump while running. The pump is connected via serial to any remote central station, utilising the mainframe which can be a computer or other system. It is possible to program the running mode, modify parameters, start and stop the pump. The pump also can communicate with a PC. However, the transmission protocol is often not compatible with that of the pump. It is therefore necessary to install an external interface card. To interface a PC and one or more pumps, a customized program must be created according to the system requirements.

12. AMS RH model

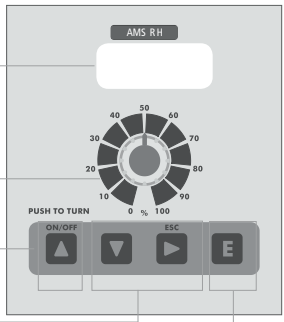

LCD backlit display

Storke Lenght Knob

Turn the pump on or off and exit from setup menu (without saving parameters)

Scroll and increase digit

Enter / exit from setup menu (saving parameters)

The "AMS RH" pump is equipped with a keyboard.To avoid any misunderstanding during next chapters all keys will be described as shown on this legend:

ON/OFF ▲ **"UP" key**

ESC ▶ **"RIGHT" key**

▼ **"DOWN" key**

E **"E" key**

Note: it is possible to program the pump for dosing either oxidant or anti-oxidant, ensuring that o-rings match the additive chemical compatibility

Turn on the pump. Keep pressed **"E"** key for at least 4 seconds to enter in program mode. Pump's display shows:

PASSWORD :
--> 0000 **fig.1**

Use **"UP"** and **"DOWN"** keys to edit the password, press **"RIGHT"** to move on next digit.

"SETUP" program

Once entered the password, pump's display shows:

--> SETUP
PARAM **fig.2**

Move arrow on "SETUP" then press the **"E"** key:

"SET POINT" program

Setup
1) Point **fig.3**

Press **"E"**, the display will show:

a) ->100%
650mV **fig.4**

The pump works at 100% of its capacity if ORP value is 650mV. Make sure that arrow is on "650mV" to change it and then use **"UP"** and **"DOWN"** keys to enter a new value. Use **"RIGHT"** key to move on next digit. Move arrow on 100% and change using the **"UP"** and **"DOWN"** keys.

b)->00%
700mV **fig.5**

The display shows that pump stops when ORP is 700mV. Make sure that arrow is on 700mV to change this value then use **"UP"** and **"DOWN"** keys to enter a new value. Use **"RIGHT"** key to move on next digit. Move arrow on 100% and change using the **"UP"** and **"DOWN"** keys. Press **"E"** key to confirm values and quit from programming mode. Display shows for a few seconds: DATA SAVED. Pump will change proportionally its dosing capacity between 650mV and 700mV. Now the pump will modify proportionally its own dosing capacity in range between 650mV and 700mV. In previous example pump will dose "chlorine".

Probe calibration

To obtain a reliable measurement it is necessary (during installation) calibrate the probe. To do this, a known buffer solutions is needed. Proceed as follows:
1) Measure buffer solution temperature and verify if it is the same printed on solution's label.
2) Insert probe's connector (blue color) into pump's input connector.
3) Remove protective cap from probe and wash it into water. Then dry it.
Into "Setup" menu (fig.3) choose "2)Calib" then press **"E"** key. The display shows:

R: 600 mV
C: 650 mV **fig,6**

"R" means buffer solution reading value and "C" the calibration to refer to. During the calibration the "R" value could be different from the buffer solution value. Wait a stable reading in "R". Dip probe in a 650mV buffer solution and use **"UP"** and **"DOWN"** keys to change the value in "C": to have buffer solution value. Wait a stable reading in "R:" then press **"E"** key to confirm Display shows probe's data before to return at main menu. If calibration process fails the pump will show "MV CALIB FAILED". Not changing any value the program will return to "Calib" mode. To exit press "RIGHT" key twice.

DELAY

In main menu choose "PARAM" (fig.2) and press **"E"** key. Display shows:

DEL.: --> 00
0 0 0 0 **fig.9**

The **-->** arrow is on "DEL". This value is pump's waiting time after any start up procedure: pump will wait set time before start dosing every time it is powered on. Use **"UP"** and **"DOWN"** keys to change this value. Waiting time may be set from 1 to 60 minutes.

PASSWORD

In main menu choose "PARAM" (fig.2) and press "E" key. Display shows:

DEL.: ->00
0 0 0 0 fig.

Press "RIGHT" key to move on 0 0 0 0. All new pumps have "0 0 0 0" as default password, use "UP" and "DOWN" keys to change this value. Press "E" to confirm new data and "RIGHT" to exit from programming mode.

MAXIMUM TIME DOSING ALARM

This alarm prevents the pump to dose if a set time is reached. To set this alarm enter into "Setup menu" as shown in fig.3 Use "DOWN" key to choose "3) Alarm" and press "E" key. The pump shows:

-> AL OFF
DOSING fig.1

To activate the alarm use "UP" or "DOWN" keys to set the time (from 1 to 100 minutes or "AL OFF"). To setup the alarm mode use the "RIGHT" key. Cursor moves on "DOSING". Use "UP" or "DOWN" keys to change this voice. On "STOP" mode the pump will stop the dosing procedure once the set time is reached. The pump's display will show the alarm condition and requires to press a key to continue. On "DOSING" mode the pump will NOT stop the dosing procedure once the set time is reached. The pump's display will show the alarm condition and requires to press a key to continue.

Special functions

- Keep pressed the "UP" key to turn off the pump. Display shows "OFF" and it will switch off. Keeping pressed the "UP" key, the pump will switch on.

- Keep pressed the "DOWN" key to read on display the power supply input.

- Keep pressed the "E" key for manual dosing.

- Pump's reset: turn off the pump, keep pressed "UP" and "DOWN" keys then turn on the pump. Release "UP" and "DOWN" keys and proceed to pump's set up. This procedure will return the pump to its shipment condition.

PRIMING

To proceed follow these steps: connect all hoses to the pump; open dischage valve by completely turning the discharging knob (counter clock-wise). Power up the pump and turn stroke lenght knob to 100%.
All air inside the pump head will exit through the outgassing outlet. When product will leak from it, close immediately the outgassing valve. If dosing product is particularly dense, to facilitate the priming, insert on vent pipe a syringe of 20 cc and suck inside.

13. AMS PH model

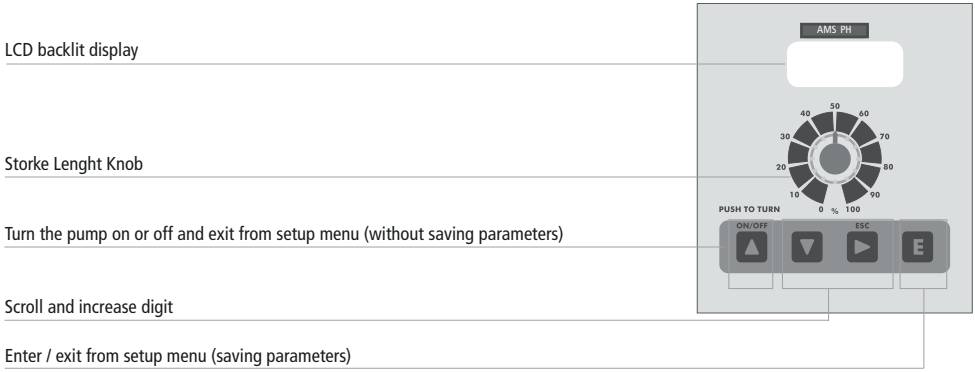

The "AMS PH" pump is equipped with a keyboard.To avoid any misunderstanding during next chapters all keys will be described as shown on this legend:

ON/OFF ▲ **"UP" key**

▼ **"DOWN" key**

ESC ▶ **"RIGHT" key**

E **"E" key**

Entering in program mode

Turn on the pump. Keep pressed "E" key for at least 4 seconds to enter in program mode. Pump's display shows:

PASSWORD:
-> 0000 fig.

Use "UP" and "DOWN" keys to edit the password, press "RIGHT" to move on next digit.

"SETUP" program

Once entered the password, pump's display shows:

-> SETUP
PARAM fig.

Move arrow on SETUP then press "E" key:

"SET POINT" program

Setup
1) Point fig.

Press "E" key:

a)-> 00%

7.30pH fig.

The display shows that pump does not work at 00% if pH is 7.30. Make sure that arrow is on "7.30 pH" to change this value, then use "UP" and "DOWN" keys to enter a new value. Use "RIGHT" key to move on next value. Once on "00%", change it with "UP" and "DOWN" keys.

b) -> 100%
7.80pH fig.

The display shows that pump works when pH is 7.80. Make sure that arrow is on "7.80pH" to change this value, then use "UP" and "DOWN" keys to enter a new value. Use "RIGHT" to move on next value. Once on "100%", change it with "UP" and "DOWN" keys. Press "E" key to confirm values and quit from programming mode. Display shows for a few seconds: DATA SAVED. To exit from program mode press "RIGHT" key twice. Now the pump will modify proportionally its own dosing capacity in the range between 7.30pH and 7.80pH. On previous example, dosing mode is for "acid".

Probe calibration

To obtain a reliable measurement it is necessary (during installation) calibrate the probe. To do this, two buffer solutions are needed: a 7.00pH buffer solution and a 4.00pH or 9.00pH buffer solution. Proceed as follows:
1) Measure buffer solution temperature and verify if it is the same printed on solution's label.
2) Insert probe's connector (blue colour) into pump's input connector.
3) Remove protective cap from probe and wash it into water. Then dry it.

Into "Setup" menu (fig.3) choose "2)Calib" then press "E" key. The display shows:

R: 7.20 pH
C: 7.00 pH fig.

"R" means buffer solution reading value and "C" the calibration to refer to. During the calibration the "R" value could be different from the buffer solution value. Wait a stable reading in "R". Dip probe in a 7.00 pH buffer solution and use "UP" and "DOWN" keys to change the value in "C:" to have buffer solution value. Wait a stable reading in "R:" then press "E" key to confirm this first calibratio Pump will show:

R: 7.00 pH
C: 4.00 pH fig.

Remove the probe from first buffer solution and repeat the cleaning procedure. Then dip probe into second buffer solution (for example 4.00 pH) and use "UP" and "DOWN" keys to change the value in "C:" to have buffer solution value. Wait a stable reading in "R:" then press "E" key to confirm The pump will show the new values for a while and will return to main menu.

59mV / pH
- 000 mV fig.

If calibration process fails the pump will show "PH CALIB FAILED". Not changing any value the program will return to "Calib" mode. To exit press "RIGHT" key twice.

DELAY

In main menu choose "PARAM" (fig.2) and press "E" key. Display shows:

DEL.: ->00
0 0 0 0 fig.

The -> arrow is on "DEL". This value is pump's waiting time after any start up procedure: pump will wait set time before start dosing every time it is powered on. Use "UP" and "DOWN" keys to change this value. Waiting time may be set from 1 to 60 minutes.

PASSWORD

In main menu choose "PARAM" (fig.2) and press "E" key. Display shows:
DEL.: ->00
0 0 0 0 fig.

Press "RIGHT" key to move on 0 0 0 0. All new pumps have "0 0 0 0" as default password, use "UP" and "DOWN" keys to change this value. Press "E" to confirm new data. The pump shows the new password for about two seconds then it'll return to main menu. Press "RIGHT" key to leave main menu.

MAXIMUM TIME DOSING ALARM

This alarm prevents the pump to dose if a set time is reached. To set this alarm enter into "Setup menu" as shown in fig.3 Use "DOWN" key to choose "3) Alarm" and press "E" key. The pump shows:

-> AL OFF
DOSING fig.1

To activate the alarm use "UP" or "DOWN" keys to set the time (from 1 to 100 minutes or "AL OFF"). To setup the alarm mode use the "RIGHT" key. Cursor moves on "DOSING". Use "UP" or "DOWN" keys to change this voice. On "STOP" mode the pump will stop the dosing procedure once the set time is reached. The pump's display will show the alarm condition and requires to press a key to continue. On "DOSING" mode the pump will NOT stop the dosing procedure once the set time is reached. The pump's display will show the alarm condition and requires to press a key to continue.

Special functions

- Keep pressed the "UP" key to turn off the pump. Display shows "OFF" and it will switch off. Keeping pressed the "UP" key the pump will switch on.

- Keep pressed the "DOWN" key to read on display the power supply input.

- Keep pressed the "E" key for manual dosing.

- Pump's reset: turn off the pump, keep pressed "UP" and "DOWN" keys then turn on the pump. Release "UP" and "DOWN" keys and proceed to pump's set-up. This procedure will return the pump to its shipment condition.

14. Troubleshooting

Problem	Possible Cause
Pump doesn't turn on.	Pump isn't powered. Connect it to main supply. Pump's protection fuse is broken. Replace it. See page 24 for replacement procedure. Pump's main board is broken. Replace it. See page 24 for replacement procedure.
Pump is not dosing and solenoid is operating.	The foot filter is obstructed Clean it. Suction hose is empty. Pump must be primed. Repeat priming procedure. Air bubbles inside hydraulic circuit. Check valves - hoses - fitting . Product to dose is generating gas. Turn venting knob and let air flow a ay. Use a self-venting pump head.
Pump is not dosing and solenoid isn't operating or slightly operating.	Crystals presence inside valves. Check them and try to dose 2-3 liters of normal water. Change valves. Injection valve obstructed. Change it.

15. Fuse and main board replacement

Fuse or main board replacement is allowed to qualified personnel only. Before to operate disconnect the pump from main power and all hydraulic connections.

For fuse replacement is necessary to use a 3x16 and 3x15 screwdriver and a new fuse (same model of old one).

For main board replacement is necessary to use a 3x16 and 3x15 screwdriver and a new main board (same model of old one).

Fuse replacement procedure:

- Turn pump's injection knob on 0%.

- Remove 6 screws from pump's back.

- Pull pump's back cover until it's completed separated from pump's front. Be careful of the knob's spring.

- Locate the blown fuse and replace with another one having same rating.

- Reassemble the pump. Be careful to put back the knob's spring.

- Reinsert screws.

Main board replacement procedure:

- Turn pump's injection knob on 0%.

- Remove 6 screws from pump's back.

- Pull pump's back cover until it's completed separated from pump's front. Be careful of the knob's spring.

- Remove board's screws.

- Completely disconnect wires from main board and replace it. Reinsert screws.

- Reconnect wires to the main board (see enclosed picture).

- Reassemble the pump. Be careful to put back the knob's spring.

- Reinsert screws.

16. Main Board

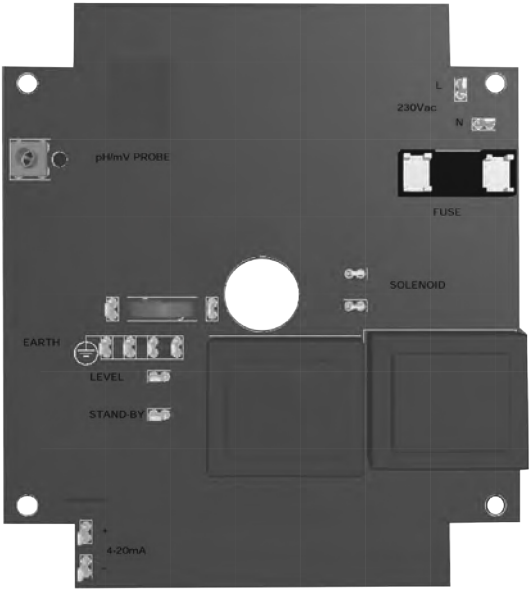

Mod. "AMS Ext/ 485"

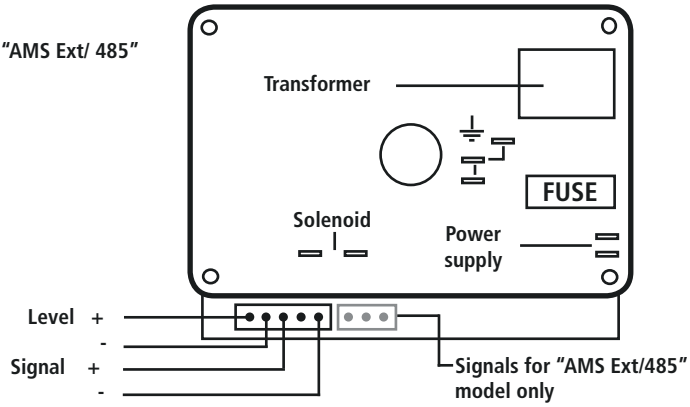

Maintenance schedule

In order to ensure the requirements of potable drinking water treated and the maintenance of the improvements as declared by the manufacturer, this equipment must be checked at least once a month.

OPERATOR PROTECTION
Use safety equipment according to the company regulations.
Use this safety equipment within the work area during installation, service and when handling chemicals:
- **protective mask**
- **protective gloves**
- **safety goggles**
- **ear plugs or hear muffs**
- **further security device, if necessary.**

POWER SUPPLY DISCONNECTION
Always disconnect power to the motor before you perform any installation or maintenance tasks. Failure to disconnect power will result in serious physical injury.

Installation and maintenance tasks should be carried out by AUTHORIZED AND QUALIFIED PERSONNEL only in accordance with local regulations.

Use original spare parts.

Maintenance inspection

Shutdown the dosing pump before any maintenance operation **Shutdown procedure.**

A maintenance schedule includes these types of inspections:
- Routine maintenance and inspections
- Three-month inspections
- Annual inspections

Shorten the inspection intervals appropriately if the pumped chemical is abrasive or corrosive.

Routine maitenance and inspections
Perform these tasks whenever you perform routine maintenance:
- Inspect the seal. Ensure that there are no leaks from the mechanical seal.
- Check electrical wiring
- Check for unusual noise and vibration (noise allowed 71 dbA; ± 5 dB).
- Check the pump and piping for leaks.
- Check for corrosion on parts of the pump and / or on hoses.

Three-month inspections
Perform these tasks every three months:
- Check that the tightenings.
- Check the mechanical seal if the pump has been left idle.

Annual inspections
Perform these inspections one time each year:
- Check the pump capacity (as per nameplate).
- Check the pump pressure (as per nameplate).
- Check the pump power (as per nameplate).

f the pump performance does not satisfy your process requirements, and the process requirements have not changed, then perform these steps:
1. Disassemble the pump.
2. Inspect it.
3. Replace worn parts.

Shutdown procedure

This procedure SHOULD BE CARRIED OUT BY AUTHORIZED AND QUALIFIED PERSONNEL

OPERATOR PROTECTION
Use safety equipment according to the company regulations.
Use this safety equipment within the work area during installation, service and when handling chemicals:
- **protective mask**
- **protective gloves**
- **safety goggles**
- **ear plugs or hear muffs**
- **further security device, if necessary.**

Shutdown the dosing pump **before any maintenance operation** or **before long downtimes**. Disconnect power and ensure it cannot be restarted.

Depressurize the system. The liquid may leak splashing.

Drain the chemical from pump head.
Release the pressure and disconnect the disharge pipe from the discharge valve.
Rinse the pump head and clean all valves.

B Appendix. Construction Materials and Technical info

Features

Power Supply
230 VAC (180-270 VAC) - 50/60 Hz
115 VAC (90-135 VAC) - 50/60 Hz
24 VAC (20-32 VAC) - 50/60 Hz
12 VDC (10-16 VDC)

Environment temperature ..... 10 - 45°C (32 - 113°F)
Chemical temperature ..... 0 - 50°C (32 - 122°F)
Transportation and storage temperature ..... 10 - 50°C (32 - 122°F)
Installation class II
Pollution level 2
Audible noise 71dbA
Protection degree ..... IP 65
Max installation height ..... 1,5 m
Capacity ..... Table below

INFORMATION

Mod. AMS AMS LPV [1]	Flow				cc per stroke [2]		stroke/ min	Pressure		Ampere peak (A)		PVDF Delivery hose	Suction Hose	Pump head
	min cc/h	max l/h	Min GPH	Max GPH	min	max		bar	PSI	230 VAC	115 VAC			
2505	0,21	5	0,039	1.32	0,21	0.70	120	25	362	2.5	2.5	4 x 6	4x 6	L
1510	0,42	10	0,079	2.64	0,42	1.4	120	15	217	2.5	2.5	4 x 6	4 x 6	M
1015	0.62	15	0,118	3.96	0.62	2.08	120	10	217	2.5	2.5	6 x 8	6 x 8	M
0720	0,83	20	0,158	5.28	0,83	2.8	120	7	101	2.5	2.5	6 x 8	6 x 8	N
0340	1,67	40	0,317	10.56	1,67	5.6	120	3	43	2.5	2.5	8 x 10	8 x 12	S
0260	2,31	60	0,61	15.85	2,31	7,7	130	2	29	2.5	2.5	8 x 10	8 x 12	T
Mod. AMSA	**Flow**				**cc per stroke [2]**		**stroke/ min**	**Pressure**		**Ampere peak (A)**		**PVDF Delivery hose**	**Suction Hose**	**Pump head**
	min cc/h	max l/h	Min GPH	Max GPH	**min**	**max**		**bar**	**PSI**	230 VAC	115 VAC			
253.2	0.13	3.2	0.00003	0.85	0.13	0.44	120	25	362	2.5	2.5	4 x 6	4x 8	LA
1506	0.25	6	0.00007	1.59	0.25	0.83	120	15	217	2.5	2.5	4 x 6	4 x 8	MA
1010	0.48	10	0.00012	2.64	0.48	1.39	120	10	217	2.5	2.5	6 x 8	6 x 8	MA
0713	0.54	13	0.00014	3.43	0.54	1.80	120	7	101	2.5	2.5	6 x 8	6 x 8	NA
0330	1,25	30	0,33	7,92	1,25	4,17	120	3	43	2.5	2.5	8 x 10	8 x 12	SA
0238,5	1,61	38,5	0,43	10,17	1,61	5,35	130	2	29	2.5	2.5	8 x 10	8 x 12	TA

[1] Flow rates indicated refer to a measure with water. flow may change according to viscosity.
[2] cc per stroke: referred to cc/stroke with stroke length knob on 100%.

Materials
AMS / AMSA

✓ : standard
✗: options available

	PVDF	PP	PPV0	PMMA	PVC	PE	CE	VETRO	PTFE	SS	FKM B	EPDM	WAX	SI
BOX		✓	✗											
PUMP HEAD	✓			✗										
DIAPHRAGM									✓					
BALLS							✓	✗	✗	✗				
SUCTION HOSE	✗				✓	✗								
DELIVERY HOSE	✓				✗	✗								
Venting hose	✗				✓	✗								
O RING									✗		✗	✗	✗	✗
LEVEL PROBE/ FOOT FILTER	✓													
LEVEL RPOBE CABLE						✓								

Materials
AMS LPV

	PVDF	PP	PPV0	PMMA	PVC	PE	CE	GLASS	PTFE	SS	FKM B	EPDM	WAX	SI
BOX		✓	✗											
PUMP HEAD				✓										
DIAPHRAGM									✓					
BALLS										✓				
SUCTION HOSE					✓									
DELIVERY HOSE						✓								
PRIMING HOSE					✓									
O RING											✓	✗	✗	

2505: l/h 05 bar 25
Pump head mod. L

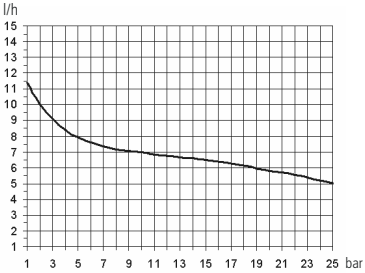

1510: l/h 10 bar 15

0720: l/h 20 bar 7
Pump head mod. N

0340: l/h 40 bar 3
Pump head mod. S

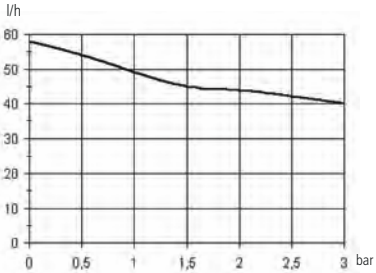

0260: l/h 60 bar 2
Pump head mod. T

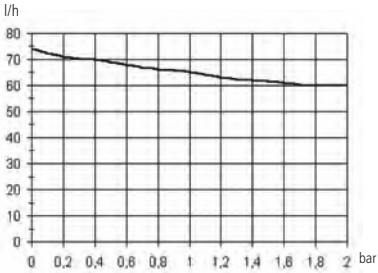

1015: l/h 15 bar 10

Pump head mod. M

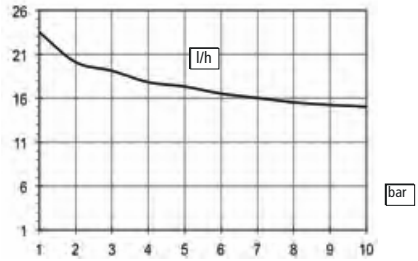

Flow rate indicated is for H_2O at 20°C at the rated pressure. Dosing accuracy ± 2% at constant pressure ± 0,5 bar.

C Appendix. Delivery Curves for self-purge pump head

253,2: l/h 25 bar 3,2
Pump head mod. LA

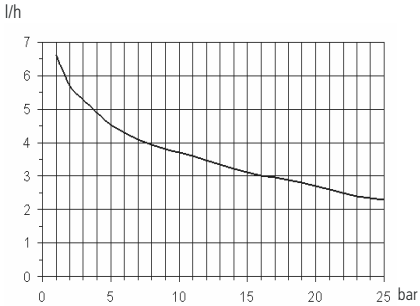

1506: l/h 6 bar 15
Pump head mod. MA

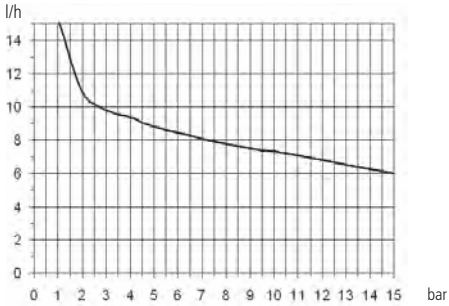

0713: l/h 13 bar 7
Pump head mod. NA

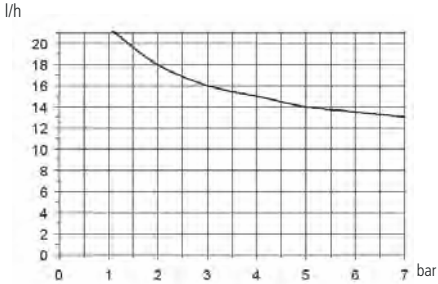

1010: l/h 10 bar 10
Pump head mod. MA

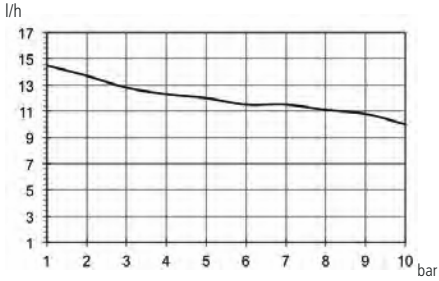

0330: l/h 30 bar 3
Pump head mod. SA

0238,5: l/h 38,5 bar 2
Pump head mod. TA

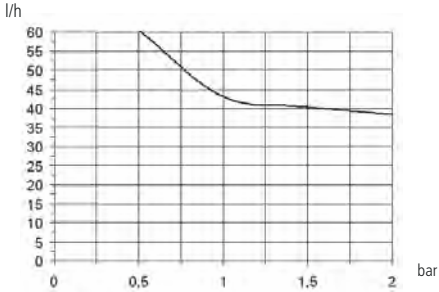

Flow rate indicated is for H_2O at 20°C at the rated pressure. Dosing accuracy ± 2% at constant pressure ± 0,5 bar.

Pump head "N" - "P"

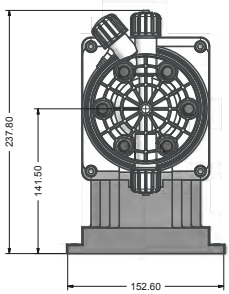

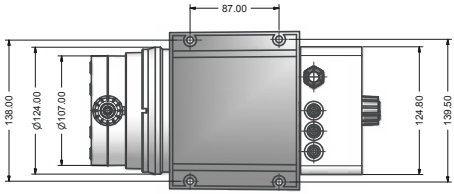

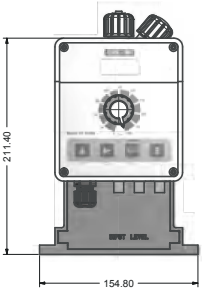

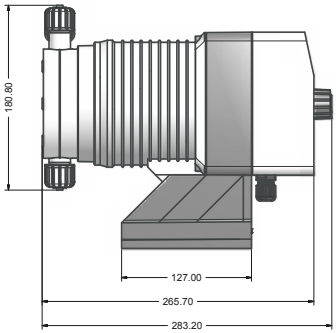

Pump head "S" - "T"

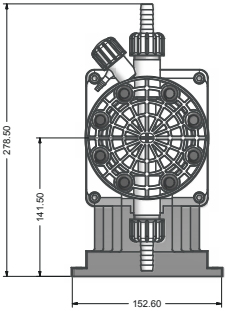

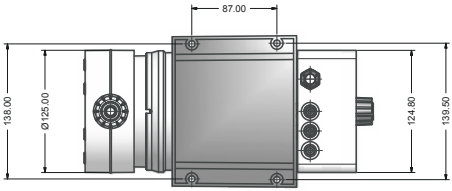

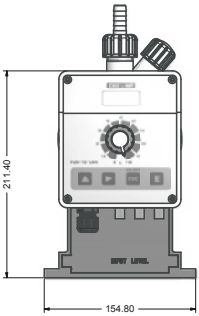

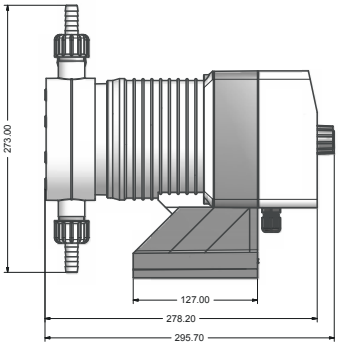

E Appendix. Chemical Compatibility Table

Solenoid driven metering pumps are widely used to dose chemical fluids and it is important that the most suitable material in contact with fluid is selected for each application. This compatibility table serves as a useful help in this respect. All the informations in this list are verified periodically and believed to be correct on the date of issuance. All the informations in this list are based on manufacturer's data and its own experience but since the resistance of any material depends by several factors this list is supplied only as an initial guide, in no way manufacturer makes warranties of any matter respect to the informations provided in this list.

Product	Formula	Ceram.	PVDF	PP	PVC	SS 316	PMMA	Hastel.	PTFE	FPM	EPDM	NBR	PE
Acetic Acid, Max 75%	CH3COOH	2	1	1	1	1	3	1	1	3	1	3	1
Hydrochloric Acid, Concentrate	HCl	1	1	1	1	3	1	1	1	1	3	3	1
Hydrofluoric Acid 40%	H2F2	3	1	3	2	3	3	2	1	1	3	3	1
Phosphoric Acid, 50%	H3PO4	1	1	1	1	2	1	1	1	1	1	3	1
Nitric Acid, 65%	HNO3	1	1	2	3	2	3	1	1	1	3	3	2
Sulphuric Acid, 85%	H2SO4	1	1	1	1	2	3	1	1	1	3	3	1
Sulphuric Acid, 98.5%	H2SO4	1	1	3	3	3	3	1	1	1	3	3	3
Amines	R-NH2	1	2	1	3	1	-	1	1	3	3	1	1
Sodium Bisulphite	NaHSO3	1	1	1	1	2	1	1	1	1	1	1	1
Sodium Carbonate (Soda)	Na2CO3	2	3	1	1	1	1	1	1	2	1	1	1
Ferric Chloride	FeCl3	1	1	1	1	3	1	1	1	1	1	1	1
Calcium Hydroxide (Slaked Lime)	Ca(OH)2	1	1	1	1	1	1	1	1	1	1	1	1
Sodium Hydroxide (Caustic Soda)	NaOH	2	1	1	1	1	1	1	1	2	1	2	1
Calcium Hypochlor.(Chlor.ted Lime)	Ca(OCl)2	1	1	1	1	3	1	1	1	1	1	3	1
Sodium Hypochlorite, 12.5%	NaOCl + NaCl	1	1	2	1	3	1	1	1	1	1	2	3
Potassium Permanganate, 10%	KMnO4	1	1	1	1	1	1	1	1	1	1	3	1
Hydrogen Peroxide, 30% (Perydrol)	H2O2	1	1	1	1	1	3	1	1	1	3	3	1
Aluminium Sulphate	Al2(SO4)3	1	1	1	1	1	1	1	1	1	1	1	1
Copper-II-Sulphate (Roman Vitriol)	CuSO4	1	1	1	1	1	1	1	1	1	1	1	1

[1] Calcium Hypochlor.(Chlor.ted Lime): WQA test was based on 1% Calcium Hypochlorite solution.

Resistance rating

Resistant	1
Fairly resistant	2
Not resistant	3

MATERIALS

Polyvinyldene fluorid	PVDF	Pump Heads, valves, fitting tubing
Polypropylene	PP	Pump Heads, valves, fitting level floate
PVC	PVC	Pump Heads
Stainless steel	SS 316	Pump Heads, valves
Polymethyl Metacr.(Acrylic)	PMMA	Pump Heads
Hastelloy	C-276	Injection valve spring
Polytetrafluoroethylen	PTFE	Diaphragm
Fluorocarbon (Viton® B)	FPM	Sealings
Ethylene propylene	EPDM	Sealings
Nitrile	NBR	Sealings
Polyethylene	PE	Tubing

F Appendix. Hoses resistance table

Hose features are very important for a reliable dosage. Every pump's model is made to work in the best way using selected hoses according to pump's capacity / model. Information reported here are intended for standard use only. For extended information ask to hose's manufacturer.

Suction / Delivery Hose			
4x6 mm PVC (transparent)	4x8 mm PE (opaque)	6x8 mm PE (opaque)	8x12 mm PVC (transparent)

Delivery Hose	Working Pressure				Breaking Pressure			
4x6 mm PE 230 (opaque)	20°C 12 bar	30°C 10.5 bar	40°C 8.5 bar	50°C 6.2 bar	20°C 36 bar	30°C 31.5 bar	40°C 25.5 bar	50°C 18.5 bar
4x8 mm PE 230 (opaque)	20°C 19 bar	30°C 15.7 bar	40°C 12 bar	50°C 7.5 bar	20°C 57 bar	30°C 47 bar	40°C 36 bar	50°C 22.5 bar
6x8 mm PE 230 (opaque)	20°C 8.6 bar	30°C 6.8 bar	40°C 4.8 bar	50°C 2.3 bar	20°C 26 bar	30°C 20.5 bar	40°C 14.5 bar	50°C 7 bar
8x12 mm PE 230 (opaque)	20°C 12 bar	30°C 10.5 bar	40°C 8.5 bar	50°C 6.2 bar	20°C 36 bar	30°C 31.5 bar	40°C 25.5 bar	50°C 18.5 bar

4x6 mm PVDF Flex 2800 (opaque)	20°C 40 bar	30°C 34 bar	40°C 30 bar	50°C 27 bar	60°C 24.8 bar	80°C 20 bar	90°C 10 bar
6x8 mm PVDF Flex 2800 (opaque)	20°C 29 bar	30°C 25.5 bar	40°C 22 bar	50°C 20 bar	60°C 18 bar	80°C 14.5 bar	90°C 7.3 bar
8X10 mm PVDF Flex 2800 (opaque)	20°C 18 bar	30°C 15.5 bar	40°C 13.5 bar	50°C 12.5 bar	60°C 11.2 bar	80°C 9 bar	90°C 4.5 bar

¼ PE 230 (opaque)	20°C 17.6 bar
⅜ PE 230 (opaque)	20°C 10.6 bar
½ PE 230 (opaque)	20°C 10.6 bar

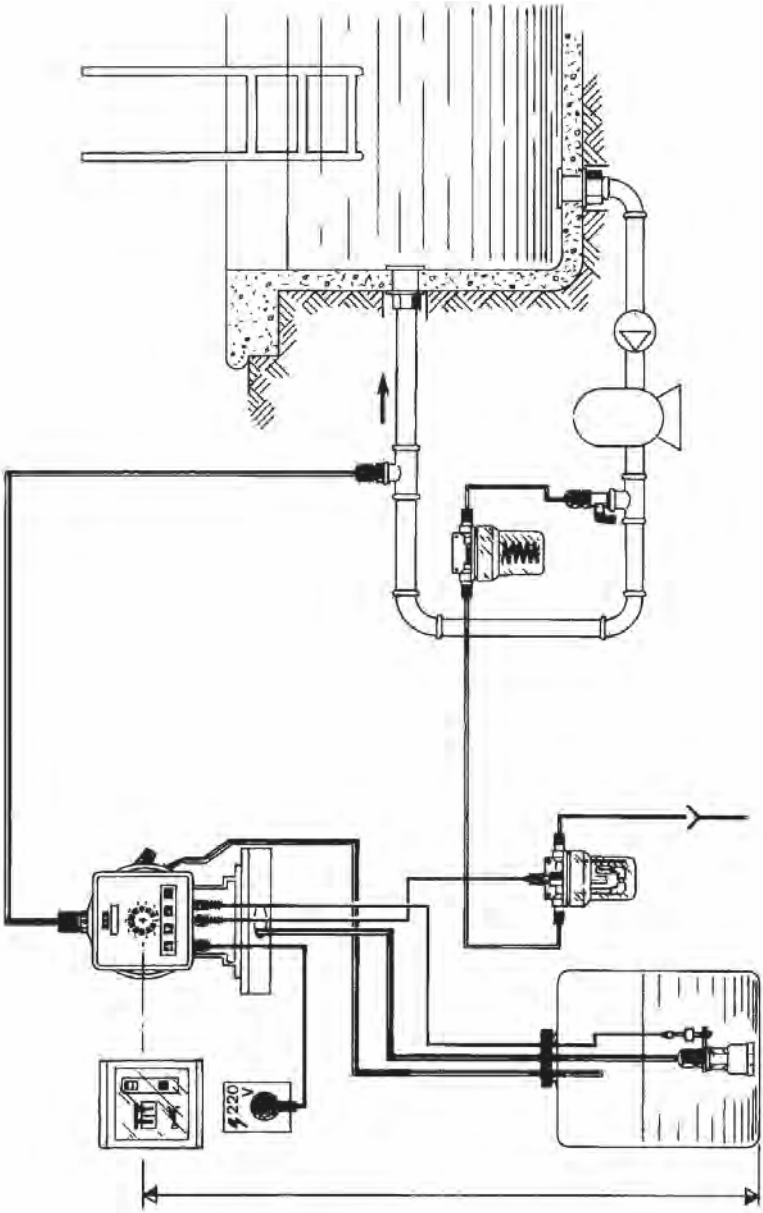
220
V

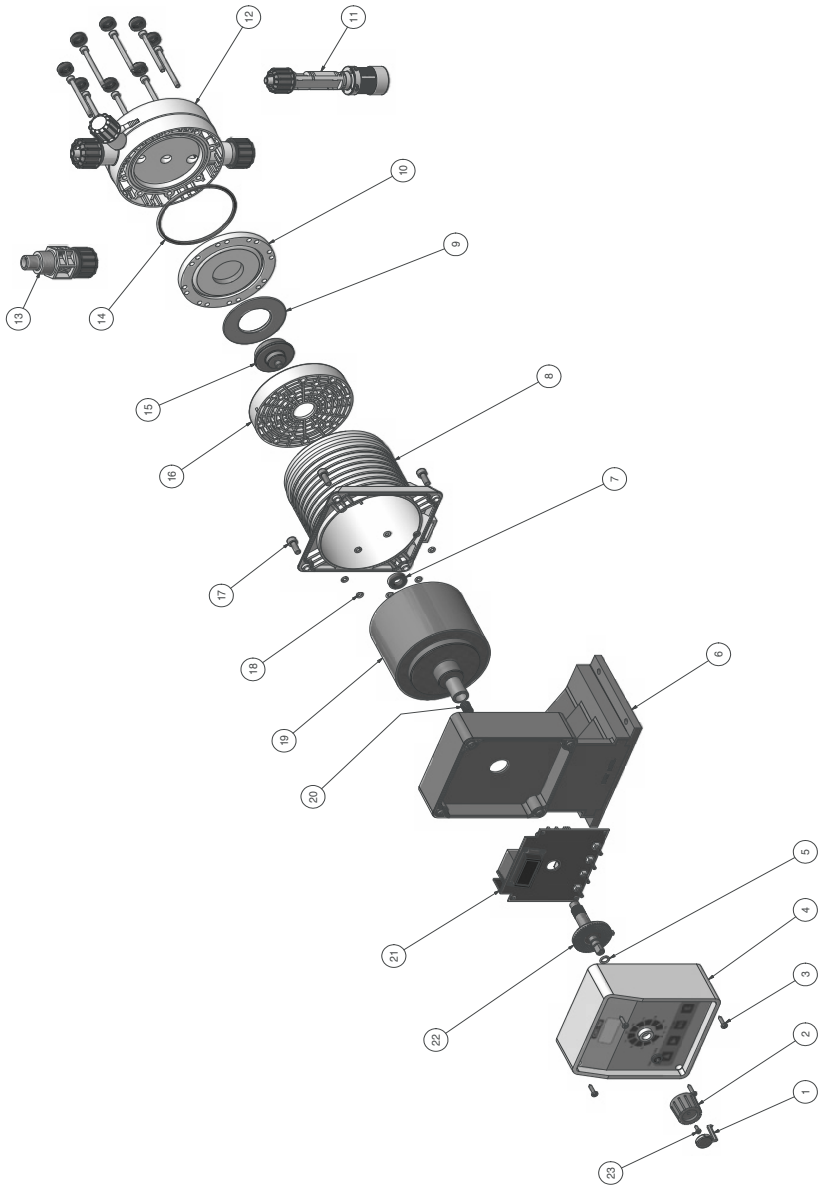
12
11
10
9
13
14
15
8
16
7
17
18
6
19
20
5
21
4
3
22
2
1
23

I Appendix. Index

GENERAL SAFETY GUIDELINES....2
PURPOSE OF USE AND SAFETY....3
LEGEND....3
ENVIRONMENTAL SAFETY....4
LABEL....4
SPARE PARTS....4
TRANSPORTATION AND STORAGE.... 5
1. Introduction....6
2. Unpacking....7
3. Pump's description....8
4. Before to Install warnings....9
5. Installation draw....10
6. Hydraulic installation....11
7. Self-Venting pump head installation....14
8. Electrical Installation....15
9. Priming - level alarm - threshold value....17
10. Basic settings....18
11. AMS EXT / RS485 model....19
12. AMS RH model....20
13. AMS PH model....23
14. Troubleshooting....26
15. Fuse and main board replacement....27
16. Main Board....28
A Appendix. Maintenance....29
B Appendix. Construction Materials and Technical info....31
C Appendix. Delivery Curves....32
C Appendix. Delivery Curves for self-purge pump head....33
D Appendix. Dimensions....34
E Appendix. Chemical Compatibility Table....35
F Appendix. Hoses resistance table....36
G Appendix. Installation draw for AMS PH/RH....37
H Appendix. Exploded view....38

PRECAUTIONS RELATING TO DIRECTIVES, REGULATIONS AND STANDARDS

§ CE/EU and UKCA marking

We guarantee that this product meets the essential requirements of the applicable Directives and Regulations based on the following specifications. Please carefully consider the following specifications for use of the product in European Union member countries and the United Kingdom.

• CE/EU harmonized directives and standards

Directives
DIRECTIVE 2006/42/EC
DIRECTIVE 2014/35/EU
DIRECTIVE 2014/30/EU
DIRECTIVE 2011/65/EU
DELEGATED DIRECTIVE (EU) 2015/863

Harmonized standards
EN ISO 12100
EN 809
EN ISO 20361
EN IEC 61326-1
EN 61010-1
EN IEC 63000

• UKCA harmonized regulations and standards

Regulations
2008 No. 1597
2008 2016 No. 1091
2016 No. 1101
2012 No. 3032

Harmonized standards
BS EN ISO 12100
BS EN 809
BS EN ISO 20361
BS EN IEC 61326-1
BS EN 61010-1
BS EN IEC 63000

Disposal of end-of-life equipment by users

This symbol warns you not to dispose of the product with normal waste. Respect human health and the environment by giving the discarded equipment to a designated collection center for the recycling of electronic and electrical equipment. For more information visit the online site.

When dismantling a pump please separate material types and send them according to local recycling disposal requirements. We appreciate your efforts in supporting your local Recycle Environmental Program. Working together we'll form an active union to assure the world's invaluable resources are conserved.