R990525

K PLUS - K CL PLUS - K CO PLUS

Self-venting version: KA PLUS
Viscous liquids: K PLUS LPV

PRODUCT LABEL

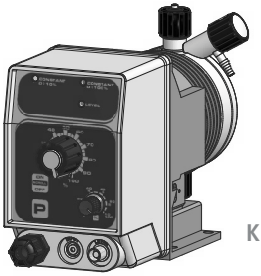

K CL PLUS

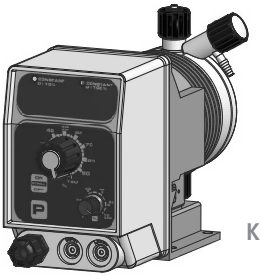

K CO PLUS

K PLUS

EN

OPERATING MANUAL

SOLENOID DRIVEN METERING PUMPS
WITH DIAPHRAGM

This operating instructions contains safety information that if ignored can endanger life or result in serious injury.

Read these instructions **carefully** before use and keep them for future reference. The original instruction is in English. All non-english instructions are translations of the original instruction.

Information and specifications on this manual could be uncorrect or could have printing errors. Specifications are subject to change without notice.

Version: R2-07-21

GENERAL SAFETY GUIDELINES

Operating, installing, or maintaining the unit in any way that is not covered in this manual could cause death, serious personal injury, or damage to the equipment.

ICON

This manual use the following safety message icon:

Danger!
Indicates a hazardous situation which, if not avoided, will result in death or serious injury.

Warning!
Indicates a hazardous situation which, if not avoided, could result in death or serious injury.

Important - A practice not related to personal injury or additional information.

Cross reference - An instance which refers to related information elsewhere in the same document

PURPOSE OF USE AND SAFETY

METERING PUMP IS INTENDED FOR CHEMICAL DOSING.

Do not use in explosive area (EX).
Do not use with flammable chemicals.
Do not use with radioactive chemicals.

Use after a proper installation.

Use the pump in accordance with the data and specifications printed on the label.

Do not modify or use in a manner inconsistent with the provisions of the operating manual.

Keep the pump protected from sun and water. Avoid water splashes.

In emergencies the pump should be switched off immediately. Disconnect the power cable from the power supply.

When using pump with aggressive chemicals observe the regulations concerning the transport and storage of aggressive fluids.

When installing always observe national regulations.

Manufacturer is not liable for any unauthorized use or misuse of this product that may cause injury, damage to persons or materials.

Pump must be accessible at all times for both operating and servicing. Access must not be obstructed in any way.

Feeder should be interlocked with a no-flow protection device.

Pump and accessories must be serviced and repaired by qualified and authorized personnel only.

Before any operation:
- **always read chemical Material Safety Data Sheet (MSDS);**
- **always wear protective clothing;**
- **always discharge the liquid end before servicing the pump.**
- **empty and rinse the liquid end before work on a pump which has been used with hazardous or unknown chemicals.**
-

This equipment requires regular maintenance to ensure potability requirements of the water and maintenance of improvements as declared by the manufaturer.

Feeder should be interlocked with a no-flow protection device to automatically shut-off the pumps when there is no flow!

Adequate measures shall be taken to prevent cross connection of chemicals!

Chemical feeding must be stopped during backwash cycles and periods of noflow as these conditions may introduce the potential for chemical overdosing. Not doing so may result in elevated chemical concentrations and hazerdous gas introduction into the pool or spa.

ENVIRONMENTAL SAFETY

Work area
Always keep the pump area clean to avoid and/or discover emissions.

Recycling guidelines

EWC code: 16 02 14

Always recycle according to these guidelines:
1. If the unit or parts are accepted by an authorized recycling company, then follow local recycling laws and regulations.
2. If the unit or parts are not accepted by an authorized recycling company, then return them to the nearest representative.

Waste and emissions regulations
Observe these safety regulations regarding waste and emissions:
- Dispose appropriately of all waste.
- Handle and dispose of the dosed chemical in compliance with applicable environmental regulations.
- Clean up all spills in accordance with safety and environmental procedures.
- Report all environmental emissions to the appropriate authorities.

LABEL

Fig. 1. Product label.

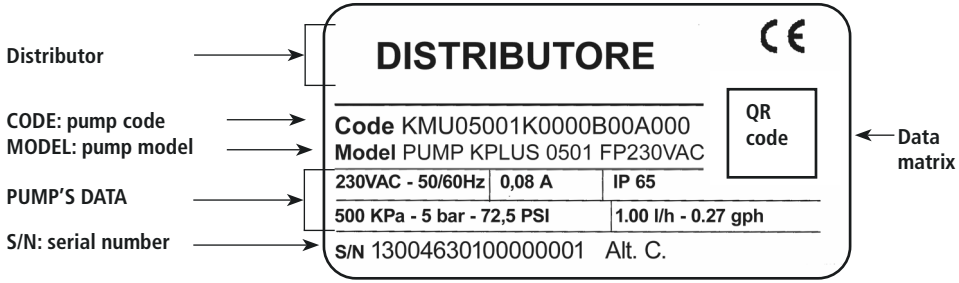

SPARE PARTS

For spare parts orders or any other communication, refer to the pump's label.
Code (CODE) and serial number (S / N) uniquely identify the pump.

Transportation and storage

A not suitable transportation or storage can cause damages.

Use origianal box to pack the pump.

Observe storage conditions also for transportation.

Although packed, always protect the unit against humidity and the action of chemicals.

Before return the dosing pump to the manufacturer Repair service, drain the chemical from pump head and rinse it. Refer to **Shutdown procedure.**

Fill the PRODUCT SERVICE REPAIR FORM and send it with the dosing pump.
Repair service is not accepted if PRODUCT SERVICE REPAIR FORM is missing.

DO NOT TRASH PACKAGING. USE IT TO RETURN THE PUMP.

Transportation and storage temperature ..... 10-50°C (32-122°F)
Umidity ..... 95% relative humidity (not condensed)

Included into package

QUANTITY	CONTENT	**K PLUS**	**K CL PLUS**	**K CO PLUS**	**KA PLUS**	**KA CL PLUS**	**KA CO PLUS**	**K PLUS LPV**	**K CL PLUS LPV**	**K CO PLUS LPV**
n. 4	ø6 dibbles	●	●	●	●	●	●	●	●	●
n. 4	4,5 x 40 self tapping screws	●	●	●	●	●	●	●	●	●
n. 1	5 X 20 delayed fuse	●	●	●	●	●	●	●	●	●
n. 1	level probe with axial foot filter (PVDF)	●	●		●	●				
n. 1	0,3 bar injection valve (PVDF)r	● 1/2"	● 1/2"	● 1/2"	● 1/2"	● 1/2"	● 1/2"	● 3/4"	● 3/4"	● 3/4"
m 2	delivery hose	● PVDF	● PVDF	● PVDF	● PVDF	● PVDF	● PVDF	● PE	● PE	● PE
m 2	suction hose	● PVC/PE	● PVC/PE	● PVC/PE	● PE	● PE	● PE	● PVC	● PVC	● PVC
m 2	venting hose	● PVC	● PVC	● PVC	● PE	● PE	● PE			
m 0,3	priming hose / syringe							● PVC	● PVC	● PVC
m 2,5	external signal cable	●			●			●		
n.1	operating manual	●	●	●	●	●	●	●	●	●

DESCRIPTION

K PLUS

K PLUS is a constant or proportional dosing pump with level control for chemical feeding into water.

In **Constant** dosing mode pump doses a constant quantity regularly as configured by the user.
In **Proportional** dosing mode pump doses a quantity proportionally to an input signal, digital (voltage free contact) or current (mA).

Working modes available:

- constant
- constant with 1-10 pulses divider
- multiplier with 1-10 pulses divider
- divider with 1-10 pulses divider
- divider with 1-100 pulses divider
- divider with 1-1000 pulses divider
- mA current signal (0/4 mA = 0 pulses: 20mA = max pulses)

Flow rate is determined by the stroke length and by the stroke speed. The stroke length is adjustable from 0 to 100% using the stroke length adjustment knob. However dosing accuracy is guarantee within an adjustment range from 30% to 100%.

K CO PLUS

K CO PLUS works in **constant mode.**

The pump can be set to work in

- constant
- constant with 1÷10

K CL PLUS

K CL PLUS works in **constant mode and has got level control.**

The pump can be set to work in

- constant
- constant with 1-10 speed reducer.

NSF/ANSI 61

Self venting:
KA PLUS

KA is the K version with **self-venting pump head**.
Self-venting pump head must be used when using chemicals that produce gas (i.e. hydrogen peroxide, ammonium, sodium hypoclorite at particular conditions).
For connections ☞ **"Self-Venting pump head installation".**

Compressed air:
K AC PLUS

K AC is the K version with **double supply: compressed air and power supply.**
Compressed air without lubrifiant and/or condensed water.
Air supply pressure range must be from 6 to 10 bar.

Viscosity up to 8.000 cPs:
K PLUS LPV

K PLUS LPV is the K version with PMMA pump head for **liquids with max viscosity 8.000 cPs.**
Funtioning mode is the same as K PLUS.
Flow may change according to viscosity. Flow rates indicated refer to a measure with water.
Liquid ends: 3/4" injection valve, 16x22 PVC suction hose and 8x12 PE injection hose.
Not included: Stainless steel foot filter with valve.

Fig. 2. K PLUS - KA PLUS

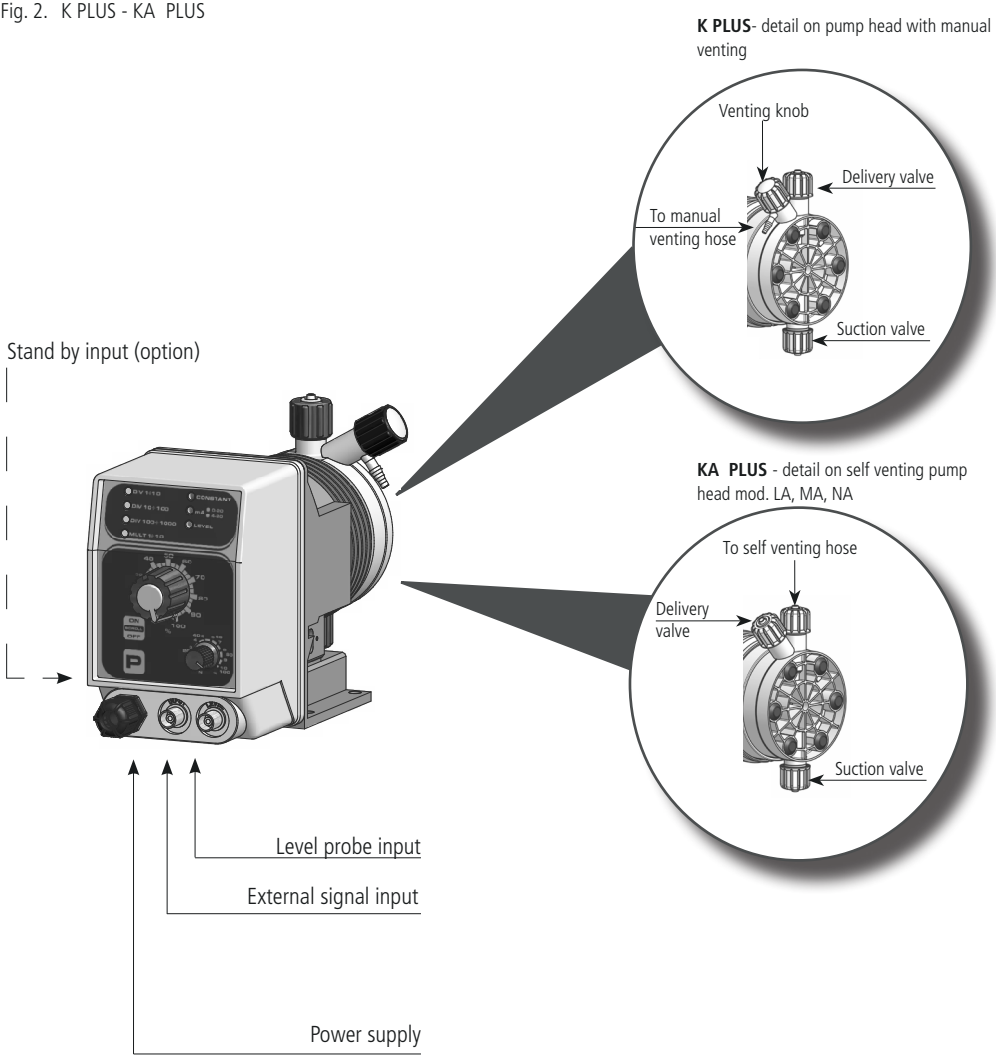

Fig. 3. K PLUS - KA PLUS with PMMA pump head.

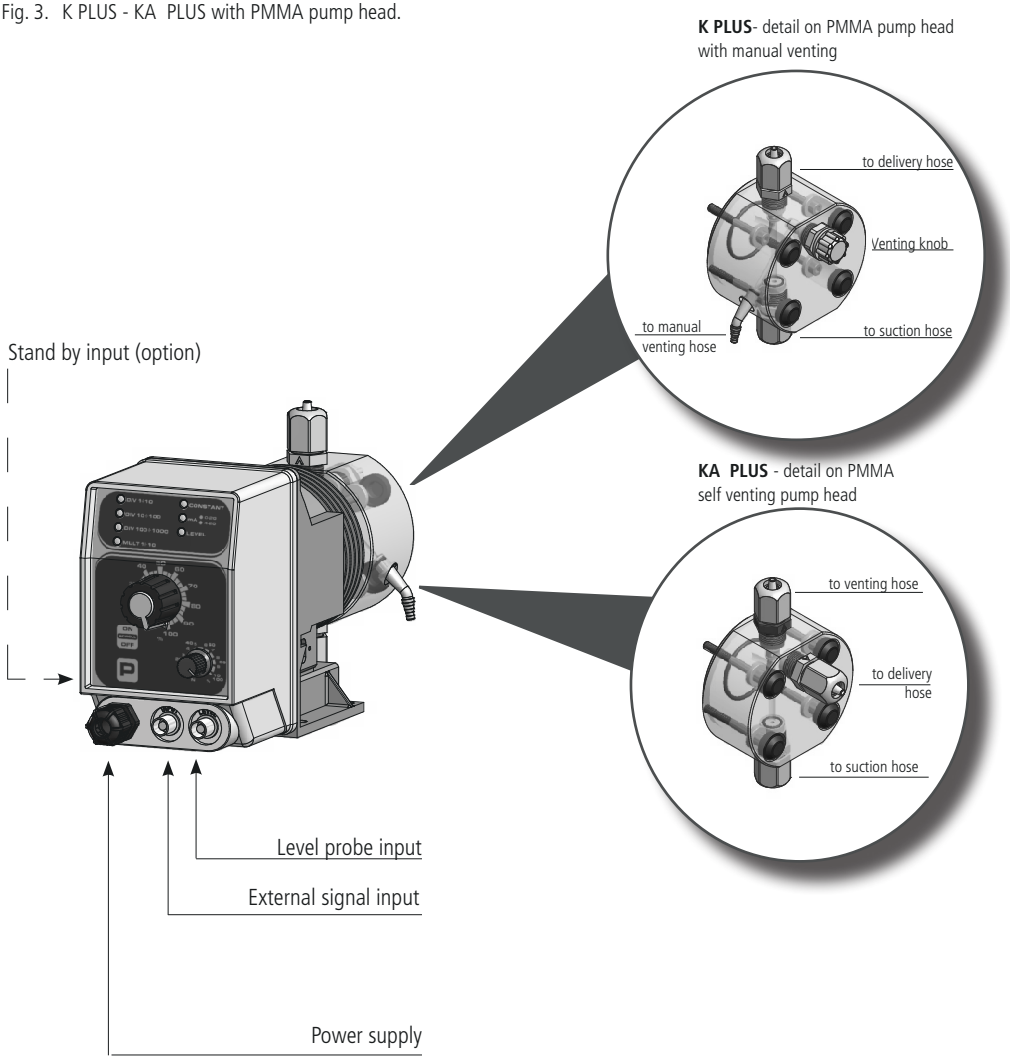

Features

Power Supply	Fuse
230 VAC (180-270 VAC) - 50/60 Hz	1 A
115 VAC (90-135 VAC) - 50/60 Hz	500 mA
24 VAC (20-32 VAC) - 50/60 Hz	2 A
12 VDC (10-16 VDC)	2 A

Environment temperature .....10-45°C (55-113°F) - 50/60 Hz
Chemical temperature .....0-50°C (32-122°F) - 50/60 Hz
Transportation and storage temperature ...10-50°C (55-122°F) - 50/60 Hz
Installation class II
Pollution level 2
Altitude max .....2000 m
Audible noise.....73,4 dbA (silenced: 70,4 dbA; ultrasilenced: 69,4 dbA)
Protection degree.....IP 65
Working UR % .....85% at t ≤40 °C; 70% at 50 °C (no condensing water)
Max installation height.....1,5 m
Capacity .....Table 1 and 2

Tab. 1. Capacity (manual and self venting models)

CAPACITY														
Mod. K PLUS K PLUS LPV[1]	**Flow**				**cc per stroke[2]**		**pulse/ min**	**Max pressure**		**peak Amps (A)**		**Delivery hose (PVDF)**	**Suction hose**	**Pump head**
	min cc/h	max l/h	Min GPH	Max GPH	**min**	**max**		**bar**	**PSI**	230 VAC	115 VAC			
2001	0,03	1	0,000008	0,3	0,03	0,09	180	20	290	2.7	1.45	4 x 6	4 x 6	I
1802	0,06	2	0,000016	0,53	0,06	0,19	180	18	261	2.7	1.45	4 x 6	4 x 6	L
1504	0,11	4	0,000029	1,06	0,11	0,37	180	15	217	2.7	1.45	4 x 6	4 x 6	L
1005	0,14	5	0,000037	1,32	0,14	0,46	180	10	145	2.7	1.45	4 x 6	4 x 6	L
0808	0,22	8	0,000058	2,11	0,22	0,74	180	8	116	2.7	1.45	4 x 6	4 x 6	L
0510	0,28	10	0,000074	2,64	0,28	0,93	180	5	72	2.7	1.45	4 x 6	4 x 6	L
0501	0,28	1	0,000008	0,3	0,03	0,09	180	5	72	2.7	1.45	4 x 6	4 x 6	L
0218	0,50	18	0,00013	4,76	0,50	1,67	180	2	29	2.7	1.45	6 x 8	6 x 8	M
Mod. KA PLUS	**Flow**				**cc per stroke[2]**		**pulse/ min**	**Max pressure**		**peak Amps (A)**		**Delivery hose (PVDF)**	**Suction hose**	**Pump head**
	min cc/h	max l/h	Min GPH	Max GPH	**min**	**max**		**bar**	**PSI**	230 VAC	115 VAC			
1801	0,03	1	0,000008	0,26	0,03	0,09	180	18	261	2.7	1.45	4 x 6	4 x 6	LA
1503	0,08	3	0,000021	0,79	0,08	0,28	180	15	217	2.7	1.45	4 x 6	4 x 6	LA
103.5	0,10	3,5	0,000026	0,92	0,10	0,32	180	10	145	2.7	1.45	4 x 6	4 x 6	LA
085.5	0,15	5,5	0,000040	1,45	0,15	0,51	180	8	116	2.7	1.45	4 x 6	4 x 6	LA
057.5	0,21	7,5	0,000055	1,98	0,21	0,69	180	5	72	2.7	1.45	4 x 6	4 x 6	LA
0213	0,37	13	0,000098	3,43	0,37	1,20	180	2	29	2.7	1.45	6 x 8	6 x 8	MA

[1] Flow rates indicated refer to a measure with water. flow may change according to viscosity.
[2] cc per stroke: referred to cc/stroke with stroke length knob on 100%.

Tab. 2. Capacity (compressed air model)

CAPACITY											
Modello K AC PLUS	Flow				cc per stroke *		Max pressure		Delivery hose (PVDF)	Suction hose	Pump head
	min cc/h	max l/h	Min GPH	Max GPH	min	max	bar	PSI			
1018	0.6	18	0.16	4.7	0.6	2	10	145	6 x 8	6 x 8	M
*** cc per stroke:** referred to cc/stroke with stroke length knob on 100%.											

Manual stroke length adjustment

Max cc/stroke (**Construction Materials and Technical info**) are referred to cc/stroke with stroke length knob on 100%.
The stroke length knob adjusts the pump capacity. Press and rotate the knob when the pump is powered.

Dosing accuracy is guarantee within an adjustment range from 30% to 100%.

Note:if knob isn't on 100% position then the pump will dose at pressure greater than the one declared on label.

Materials

Materiali di costruzione K PLUS KA PLUS

✓ : standard
✗: options available
✓ : standard
✗: opzione disponibile

	PVDF	PP	PPV0	PMMA	PVC	PE	CE	GLASS	PTFE	SS	FKM B	EPDM	WAX	SI
BOX		✓	✗											
PUMP HEAD	✓			✗										
DIAPHRAGM									✓					
BALLS							✓	✗	✗	✗				
SUCTION HOSE	✗				✓	✗								
DELIVERY HOSE	✓				✗	✗								
VENTING HOSE	✗				✓	✓								
O RING									✗		✗	✗	✗	✗
LEVEL PROBE/ FOOT FILTER	✓													
LEVEL PROBE CABLE						✓								

Materiali di costruzione K PLUS LPV

	PVDF	PP	PPV0	PMMA	PVC	PE	CE	GLASS	PTFE	SS	FKM B	EPDM	WAX	SI
BOX		✓	✗											
PUMP HEAD				✓										
DIAPHRAGM									✓					
BALLS										✓				
SUCTION HOSE					✓									
DELIVERY HOSE						✓								
PRIMING HOSE					✓									
O RING											✓	✗	✗	

INSTALLATION

How to install metering pump

5 steps to install and start-up the pump:

1. Pump location
2. Piping connections (hoses, level probe, injection valve)
3. Wirings
4. Pump priming
5. Programming and start-up

The operator must be aware of safety precautions to prevent physical injury.

User health and safety

POWER SUPPLY DISCONNECTION
Disconnect power supply before you perform any installation or maintenance tasks. Failure to disconnect power will result in serious physical injury.

SAFETY EQUIPMENT
Use safety equipment according to the company regulations. Use this safety equipment within the work area:
- **Helmet**
- **Safety goggles (with side shields)**
- **Protective shoes**
- **Protective gloves**
- **Gas mask**

The work area

THE WORK AREA
Observe these regulations and warnings in the work area:
- **Always keep the work area clean.**
- **Pay attention to the risks presented by gas and vapors in the work area.**
- **Avoid all electrical dangers. Pay attention to the risks of electric shock or arc flash hazards.**
- **Avoid water splashs and direct sun!**

Pump location

Pump must be installed on a stable support at a max **1,5 mt** height from tank's bottom.

Injection point must be higher than tank to avoid accidental chemical injection.

Otherwise, connect a **multifunction valve** on delivery pipeline.

INSTALLATION PUMP GUIDELINES
Install the pump
- in a safety place and fixed to the table / wall to avoid vibration problems;
- in an easy accessible place;
- in horizontal position.

Use only hoses compatibles with product to dose.
See "Chemical compatibility table" page 31.
If dosing product is not listed please consult full compatibility table or contact chemical's manufacturer.

Requirements for product positioning

REQUIREMENTS FOR PRODUCT POSITIONING
Only use fasteners of the proper size and material.
Replace all corroded fasteners.
Make sure that all fasteners are properly tightened and that there are no missing fasteners.

Fig. 4. Installation

1 - Dosing Pump
2 - Suction Hose
3 - Delivery Hose
4 - Injection Valve
5 - Air discharge
6 - Level Probe
7 - Foot Filter
8 - Power Cable
9 - Stand-by/alarm (if any)

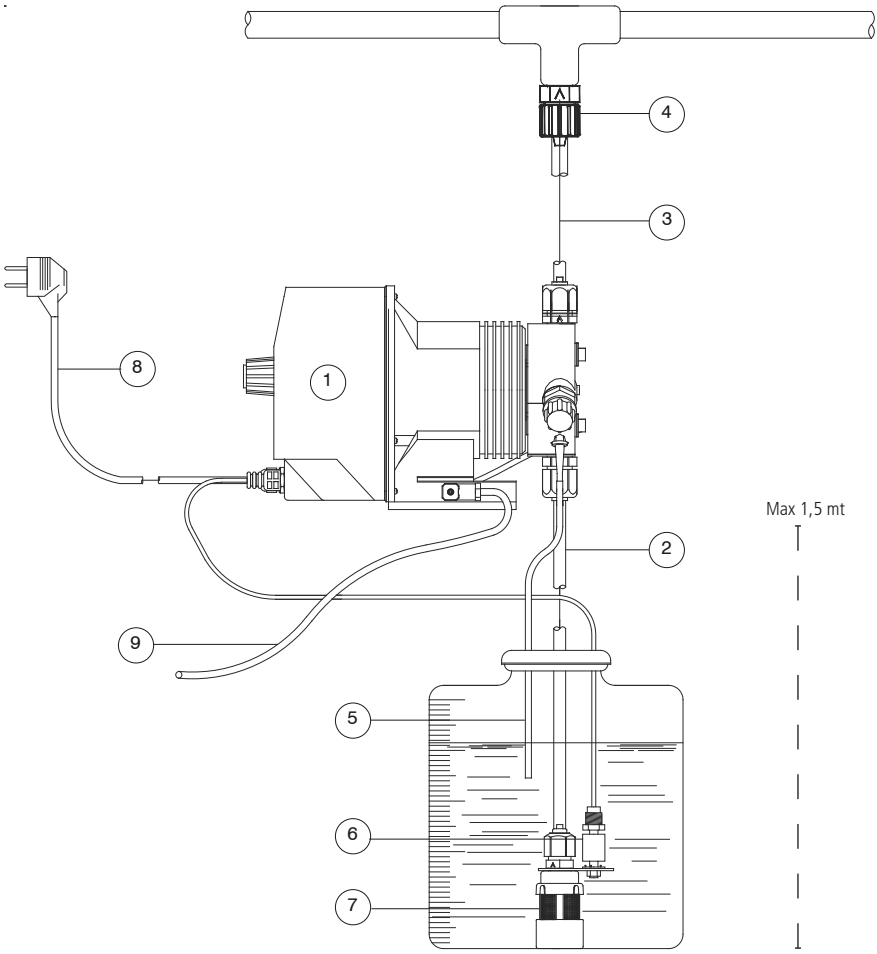

PIPING CONNECTIONS

Foot filter / Level probe (included only in some models)

Level probe is assembled with a foot filter that avoid sediments priming probles.
Install level probe on the bottom of the tank.
Connect BNC level probe to the pump BNC input.

Warning: If there is a mixer installed into tank, install a suction lance instead of level probe / foot filter.

In case of replacement of level probe parts, follow the diagram below.

Fig. 5. Level probe assembling diagram.

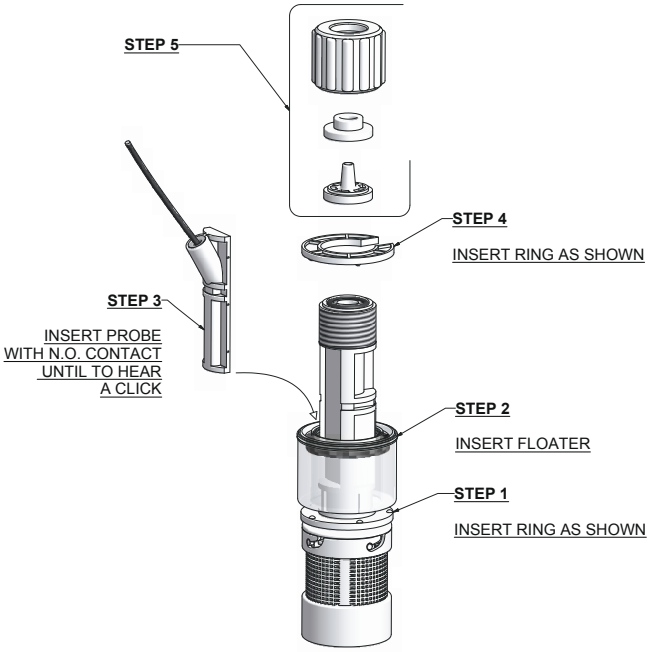

Suction hose connection

Suction piping should be as short as possible and installed in vertical position to avoid air bubbles suction.

Completely unscrew tightening nut from pump's head and remove assembling components: tightening nut, holding ring and pipe holder.
Assembly as shown in fig. 5.
Insert hose into pipe holder until it reaches the bottom. Lock hose on pump's head by screwing down the tightening nut.

Hand-tighten the nuts firmly.
Do not use tongs or any other tool.

Fig. 6. Suction hose assembling

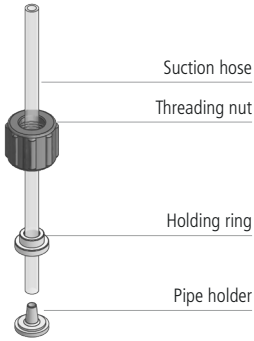

Pump head / delivery hose assembling procedure

Suction and delivery valves must be in vertical position.

Delivery hose must be firmly fixed to avoid suddenly movements that could damage near objects

Completely unscrew tightening nut from pump's head and remove assembling components: tightening nut, holding ring and pipe holder.
Assembly as shown in fig.6.
Insert hose into pipe holder until it reaches the bottom. Lock hose on pump's head by screwing down the tightening nut.

Hand-tighten the nuts firmly.
Do not use tongs or any other tool.
Connect the other end of the hose to the injection valve using the same procedure.

Fig. 7. Delivery hose / pump head assembling

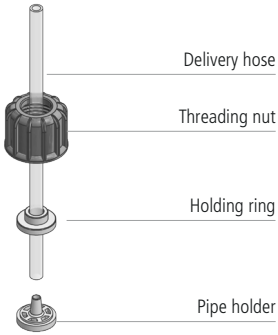

Injection valve

Injection valve must be installed on plant from water's input.
Injection valve will open at pressure greater than 0,3 bar.
On request 1, 2, 3, 4 or 5 bar injection valve are available.

Venting hose

Insert one side of venting hose into discharge connector as shown in fig 8.

Insert other side of venting hose into product's tank.
During priming procedure product exceeding will flow into tank.

Fig. 8. Manual venting pump head model (K PLUS).

fig. 9a. PVDF pump head connections.

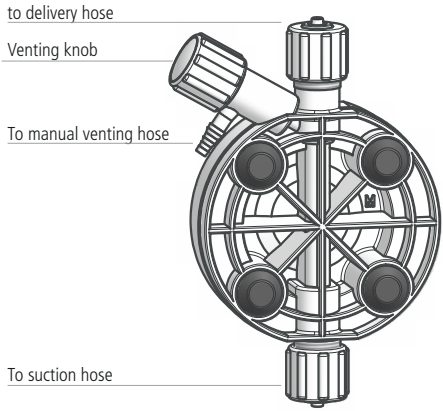

fig.9b. PMMA pump head connections.

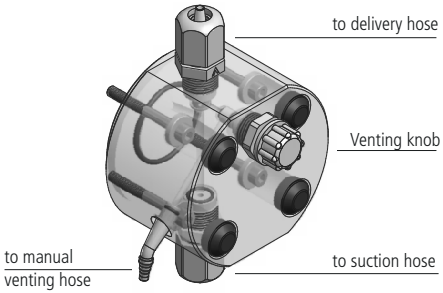

Flow direction is indicated by the arrow on the valves.

For priming procedure see **PRIMING**.

it's allowed to lightly bend venting hose.

During calibration procedure ("TEST") insert venting hose into BECKER test-tube.

KA PLUS self venting pump head connection

Refer to fig. 9 for delivery and venting hose.
Assembling procedures are the same described before.

Fig. 9. Self-venting models pump head: IA, LA, MA, (KA PLUS).

fig. 10a. PVDF pump head connections.

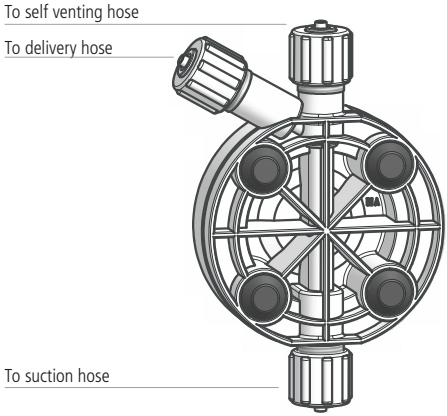

fig. 10b. PMMA pump head connections.

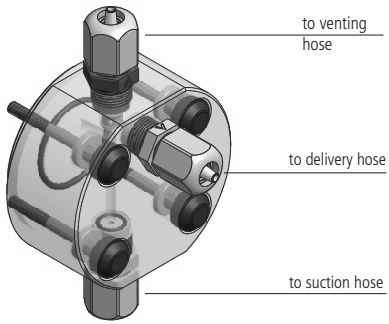

Flow direction is indicated by the arrow on the valves.

Suction, delivery and discharge valve are different.

WIRING

Preliminary checks

THE ELECTRICAL WIRINGS SHOULD BE CARRIED OUT BY AUTHORIZED AND QUALIFIED PERSONNEL ONLY IN ACCORDANCE WITH LOCAL REGULATIONS.

Before to proceed, verify the following steps:

1. **Verify the data on nameplate.**
   Make sure that the electrical data on the nameplate of the motor corresponds to the electrical supply.

2. **Verify the grounded power outlet.**
   The pump must be plugged to a grounded power outlet. Pump must be connected to a motor protection switch (Residual Current Circuit Breaker - MCCB).

3. **Install a relay switch. Do not install it in parallel with heavy inductance load (for example: engines). See fig. 10.**

Fig. 10. Electrical installation.

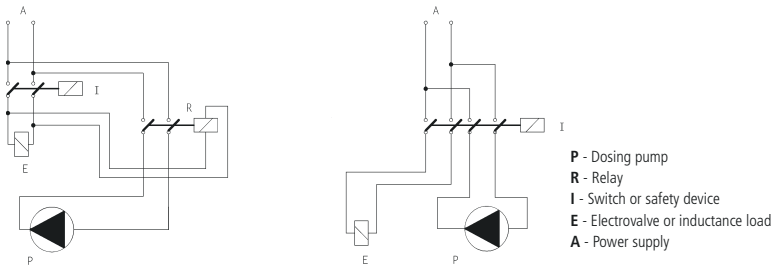

4. **Verify peak Amps. 115 or 230 VAC pumps do not use motor overload protection.**

Power supply	
12 VDC	connect the pump to a 55 Ah-12VDC battery
24 VDC	connect the pump to a 200W stabilized power supply (verify peak Amps)

5. **Verify level probe "BNC" is connected as described in "Foot filter / Level probe"..**

Pump's wiring

Connect external signal "BNC" to pump "INPUT".
This signal can be:
- water meter input
- mA signal input.

Fig. 11. Wirings

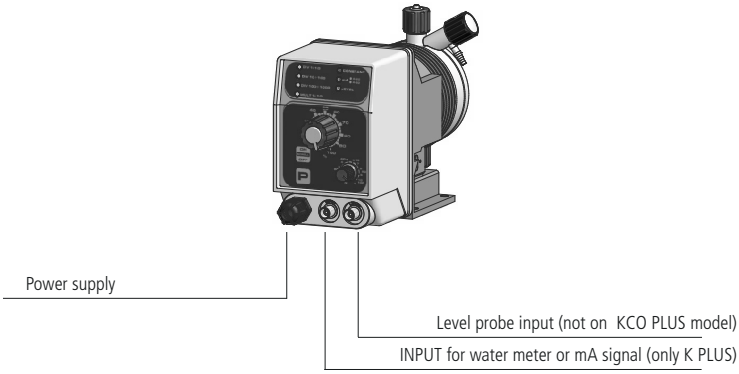

Level alarm output (option)

If present, connect level alarm (blue and brown wires).
Level alarm is free contact and not fuse protected output.
Max load relay output: 2A 250VAC.

PRIMING

Warnings

Feeder should be interlocked with a no-flow protection device to automatically shut-off the pumps when there is no flow!

Adequate measures shall be taken to prevent cross connection of chemicals!

Chemical feeding must be stopped during backwash cycles and periods of noflow as these conditions may introduce the potential for chemical overdosing. Not doing so may result in elevated chemical concentrations and hazerdous gas introduction into the pool or spa.

Never operate any pumping system with a blocked suction and discharge. You must take all necessary measures to avoid this condition.

SAFETY EQUIPMENT
Use safety equipment according to the company regulations. Use this safety equipment within the work area:
- **Helmet**
- **Safety goggles (with side shields)**
- **Protective shoes**
- **Protective gloves**
- **Gas mask**

Manual priming

To prime the pump (only in CONSTANT working mode):

1. perform al pipings (delivery, suction and venting hose);
2. turn completely the venting knob to open discharge valve;
3. set STROKE LENGTH KNOB on 100% (for viscous liquids set between 50 and 70%);
4. supply the pump.
5. When the product will start to flow into venting hose, close the discharge valve turning the knob (not for self-venting model).

For viscous liquids, to facilitate priming: insert a 20 cc syringe on venting pipe and suck;

When syringe is almost full close the discharge valve turning the knob..

Automatic priming

1. Turn OFF the pump.
2. Keep pressed OFF key for 4 seconds.
3. Pump primes for 30 seconds.
4. Turn ON the pump.

   The pump returns to the last working mode.

CONTROL PANEL

K PLUS

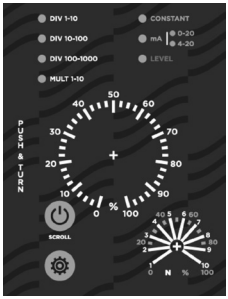

K CL PLUS

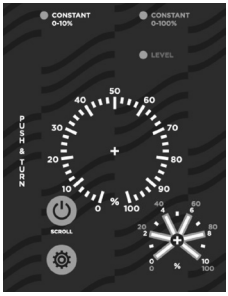

K CO PLUS

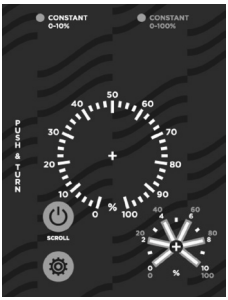

Keyboard function

"P" KEY / PROGRAMMING MODE ENTER/EXIT

ON/OFF - SCROLL PROGRAMS

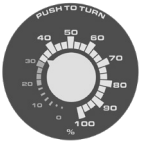

STROKE LENGHT ADJUSTMENT KNOB (0-100%)

K PLUS
- STROKE FREQUENCY ADJUSTMENT (yellow labelled scale 0-100%) or
- DIVIDER MULTIPLIER FACTOR ADJUSTMENT N (grey labelled scale N: 1-10)

K CO PLUS / K CL PLUS
- STROKE FREQUENCY ADJUSTMENT (yellow labelled scale 0-100%) WITH CONSTANT 0-100% PROGRAM
- DIVIDER FACTOR ADJUSTMENT N (grey labelled scale 0-10%) WITH CONSTANT 0-10% PROGRAM

Tab. 3. Keys functions

OPERATION	KEY
ON / OFF / AUTOMATIC PRIMING	ON/OFF - SCROLL
ENTER / EXIT from PROGRAMS MENU	⚙
CONFIRM PROGRAM	⚙
SCROLL PROGRAMS	ON/OFF - SCROLL

KCO PLUS

KCL PLUS

K PLUS

PROGRAMMS LED

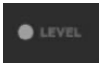

Select a program to turn on the corresponding LED **Set the PROGRAM**.

LED LEVEL (NOT ON K CO PLUS)

Functions described in **Led LEVEL**.

LEVEL led

Red level led blinks in different ways described in the table

Tab. 4. Led LEVEL

LED	STATE	SOLUTION
Permanent red	Product end (if present a level probe) / tank empty	Fill the tank
3 blinks per second	Power supply is under the range (refer to pump label)	Check power supply correspond to pump label. Shutdown and restart.
2 blinks per second	Power supply is over the range (refer to pump label)	Check power supply correspond to pump label. Shutdown and restart.
1 blink per second	Pump is waiting program setting	Press scroll key and choose a program. Confirm with P key

PROGRAMS led

PROGRAMS led shows the current working program.
Press repeatedly SCROLL to select the working program

Tab. 5. Led PROGRAMS

LED	STATE
On	Pump ON. Current pump working mode.
1 blink every 2 seconds on last working program.	Pump OFF.
All leds blinking together	Pump is waiting for programming. Press P and SCROLL to select the program or wait 30 seconds to exit without changing.

PROGRAMMING THE PUMP

Start/shutdown

Connet power supply cable and start the pump with ON/OFF key.
Led will be on the last program set (default setting:).
In OFF mode led will blink once every 2 seconds on the last program set (default setting:).

Set the PROGRAM

- Keep pressed P for 4 seconds.
- Leds blink together.
- Press P.
- Press SCROLL and choose a program.
- Press P to confirm. Led will be on the program set.

If you do not press any key, after 30 seconds pump will esc from programming mode.

PROGRAMS

Each program has its own led.

Tab. 6. Programs menu

PROGRAMS	WORKING MODE
mA [1]	proportional dosing mode based on mA current signal
CONSTANT	constant dosing mode
CONSTANT / DIVIDE	costant dosing mode with pulses divider (to reduce up to 10 times pump capacity)
MULT 1÷10 [1]	External pulses from a water meter are multiplied by a factor "N" from 1 to 10. Set "N" value turning DIVIDER MULTIPLIER FACTOR ADJUSTMENT KNOB (grey labelled scale N: 1-10).
DIV 1÷10 [1]	External pulses from a water meter are divided by a factor "N" from 1 to 10. Set "N" value turning DIVIDER MULTIPLIER FACTOR ADJUSTMENT KNOB (grey labelled scale N: 1-10).
DIV 10÷100 [1]	External pulses from a water meter are divided by a factor "N" from 10 to 100. Set "N" value turning DIVIDER MULTIPLIER FACTOR ADJUSTMENT KNOB (grey labelled scale N: 1-10). Grey labelled scela 1-10 is proportional to the range 10-100. Adjust the knob on maximum value (10) is equivalent to setting the scale on 100.
DIV 100÷1000 [1]	External pulses from a water meter are divided by a factor "N" from 100 to 1000. Set "N" value turning DIVIDER MULTIPLIER FACTOR ADJUSTMENT KNOB (grey labelled scale N: 1-10). Grey labelled scale 1-10 is proportional to the range 10-100. Adjust the knob on maximum value (10) is equivalent to setting the scale on 1000.

[1] Not available on K CO PLUS and K CL PLUS models.

mA mode

Current from an external device (BNC input) drives the pump that doses proportionally according to the minimum and maximum set (0-20 mA or 4-20 mA).

To set press SCROLL until mA led turn on (red for 0-20 mA; green for 4-20 mA) and confirm with P key.

To choose if...	... there is a mA current signal (controllers provided with proportional output in current), and you have to dose a certain amount of product.

STROKE LENGHT ADJUSTMENT KNOB (0-100%) acts percentually on pump capacity.

STROKE FREQUENCY ADJUSTMENT (yellow labelled scale 0-100%) acts on injection per minutes.

CONSTANT mode

Pump doses at a constant rate set with stroke length adjustment knob.

To set press SCROLL until CONSTANT led turn on and confirm with P key.

To choose if...	... there is not an external signal, and you have to dose a certain amount of product regularly.

STROKE LENGHT ADJUSTMENT KNOB (0-100%) acts percentually on pump capacity.

STROKE FREQUENCY ADJUSTMENT (yellow labelled scale 0-100%) acts on injection per minutes.

CONSTANT with divider mode

Pump doses at a constant rate set with stroke length adjustment knob but this rate is divided by a factor up to 10.

To set press SCROLL until CONSTANT and DIV 1÷10 led turn on together, then confirm with P key.

To choose if...	... there is not an external signal, and you have to dose a certain amount of product regularly but pump capacity is too high

STROKE LENGHT ADJUSTMENT KNOB (0-100%) acts percentually on pump capacity.

DIVIDER FACTOR ADJUSTMENT KNOB (grey labelled scale 1-10%) set the divider factor 1-10 to reduce pump capacity.

MULT 1÷10 mode

External pulses are multiplied by a value set by MULTIPLIER FACTOR ADJUSTMENT KNOB.

To set press SCROLL until MULT 1÷10 led turn on, then confirm with P key.

To choose if...	... an external signal produces low pulses number. This working mode multiplies pulses from 1 to 10 to dose the correct product amount.

STROKE LENGHT ADJUSTMENT KNOB (0-100%) acts percentually on pump capacity.

MULTIPLIER FACTOR ADJUSTMENT KNOB (grey labelled scale 1-10) set the multiplier factor 1-10 to increase pump capacity.

DIV 1÷10
DIV 10÷100
DIV 100÷1000
mode

External pulses are multiplied by a value set by DIVIDER FACTOR ADJUSTMENT KNOB.

To set press SCROLL until DIV 1÷10 or DIV 10÷100 or DIV 100÷1000 led turn on, then confirm with P key.

To choose if...	... an external signal produces high pulses number. This working mode divides pulses to dose the correct product amount.

STROKE LENGHT ADJUSTMENT KNOB (0-100%) acts percentually on pump capacity.

DIVIDER FACTOR ADJUSTMENT KNOB (grey labelled scale 1-10) set the divider factor to reduce pump capacity:

- from 1 to 10 if in **DIV 1÷10 mode**
- from 10 to 100 if in **DIV 10÷100 mode**
- from 100 to 1000 if in **DIV 100÷1000 mode**

Calculate the N factor

Use the formula:

$$\frac{[imp/l] \times [cc]}{[ppm] \times [K]} \times 1000 = N$$

N value to set with FACTOR ADJUSTMENT KNOB
[imp/l] pulses/litre from pulse emitter water meter
[cc] single injection product amount of dosing pump (cubic centimetres)
[ppm] part per million product amount (gr/m^3)
[K] product diluition coefficient.

Depending on N set working mode:

Result	Working mode
N>1	**DIV 1÷10 or DIV 10÷100 or DIV 100÷1000**
N<1	**Calculate 1/N then set the resul in MULT 1÷10**
N=1	**DIV 1÷10 or DIV 10÷100 or DIV 100÷1000 or MULT 1÷10**

TROUBLESHOOTING

Tab. 7. Guide to troubleshooting

PROBLEM	CAUSE	REMEDY
Pump does not start	• Pump not powered • Protection fuse • Main board	• Connect to main voltage • Replace fuse **Fuse replacement procedure**. • Replace main board **Main board replacement procedure**.
Pump does not feed but solenoid runs	• Foot filter obstruction • Pump head empty (suction pipe empty) • Air bubbles into pump head or into suction pipe • Product generates gas	• Clean the foot filter • Prime the pump **PRIMING** • Check valves, pipes and fittings • Open venting knob and let air flow out. Use a self-venting pump head.
Pump does not feed, solenoid does not run or slightly run	• Valves and/or ball valves blocked • Injection valve obstruction	• Clean valves and ball valve. Feed 2-3 litres of water to wash valves and pump head • Change valves

If the problem can not be solved, please contac after-sales service or return the dosing pump to the manufacturer.

Repair service

Before return the dosing pump to the manufacturer Repair service, drain the chemical from pump head and rinse it. Refer to Shutdown procedure.
If there is the possibility that residual corrosive liquid into pump head could cause damages, declare it on REPAIR FORM.

Fill the PRODUCT SERVICE REPAIR FORM and send it with the dosing pump.
Repair service is not accepted if PRODUCT SERVICE REPAIR FORM is missing.

Fuse replacement procedure

Make sure that the product is isolated from the power supply and cannot be powered by mistake.

This procedure SHOULD BE CARRIED OUT BY AUTHORIZED AND QUALIFIED PERSONNEL

In order to replace fuse, you need these tools:i:
• a 3x16 screwdriver
• a 3x15 screwdriver
• fuse (see **Features**)

- Unplug power supply and pipings.
- Turn STROKE LENGHT ADJUSTMENT KNOB on 0%.
- Remove screws on the back of the pump.
- Pull back cover until it's completed separated from pump's front. Be careful of the knob's spring.
- Locate the fuse and replace with a new one.
- Reassemble the pump. Be careful to put back the knob's spring.
- Reinsert screws

Main board replacement procedure

Make sure that the product is isolated from the power supply and cannot be powered by mistake.

This procedure SHOULD BE CARRIED OUT BY AUTHORIZED AND QUALIFIED PERSONNEL

In order to replace main board, you need these tools:i:
• a 3x16 screwdriver
• a 3x15 screwdriver
• new main board

- Unplug power supply and pipings.
- Turn STROKE LENGHT ADJUSTMENT KNOB on 0%.
- Remove screws on the back of the pump.
- Pull back cover until it's completed separated from pump's front. Be careful of the knob's spring.
- Remove boards screws..
- Completely disconnect wires from main board and replace it. Reinsert screws.
- Reconnect wires to the main board (Main board scheme).
- Reassemble the pump. Be careful to put back the knob's spring.
- Reinsert screws.

Main board

Fig. 12. Main board scheme

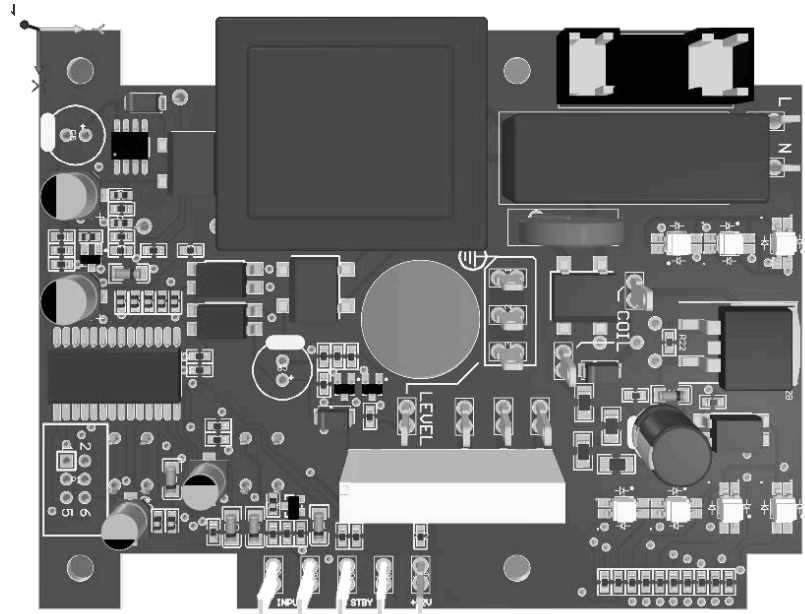

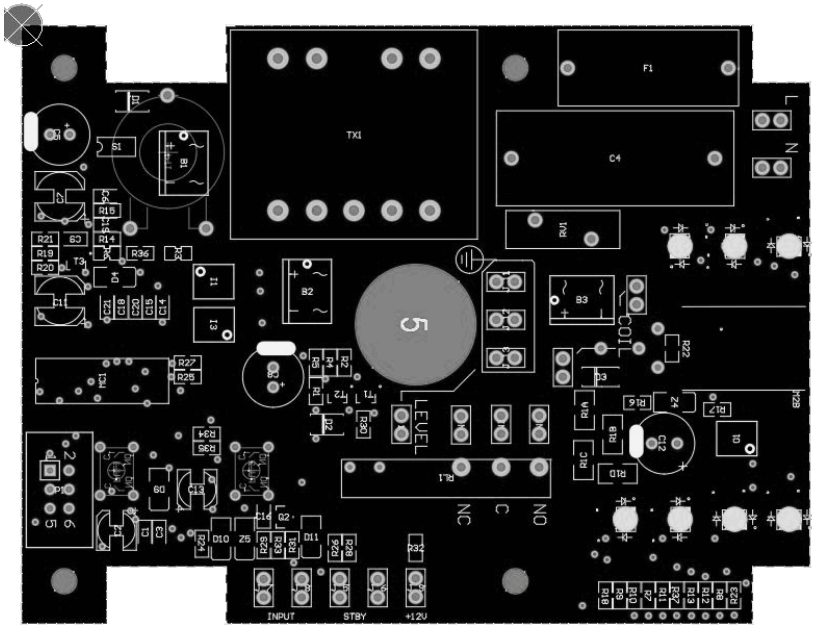

Maintenance schedule

In order to ensure the requirements of potable drinking water treated and the maintenance of the improvements as declared by the manufacturer, this equipment must be checked at least once a month.

OPERATOR PROTECTION
Use safety equipment according to the company regulations.
Use this safety equipment within the work area during installation, service and when handling chemicals:
- **protective mask**
- **protective gloves**
- **safety goggles**
- **ear plugs or hear muffs**
- **further security device, if necessary.**

POWER SUPPLY DISCONNECTION
Always disconnect power to the motor before you perform any installation or maintenance tasks. Failure to disconnect power will result in serious physical injury.

Installation and maintenance tasks should be carried out by AUTHORIZED AND QUALIFIED PERSONNEL only in accordance with local regulations.

Use original spare parts.

Maintenance inspection

Shutdown the dosing pump before any maintenance operation **Shutdown procedure.**

A maintenance schedule includes these types of inspections:
- Routine maintenance and inspoections
- Three-month inspections
- Annual inspections

Shorten the inspection intervals appropriately if the pumped chemical is abrasive or corrosive.

Routine maitenance and inspections
Perform these tasks whenever you perform routine maintenance:
- Inspect the seal. Ensure that there are no leaks from the mechanical seal.
- Check electrical wiring
- Check for unusual noise and vibration (noise allowed 74 dbA; ± 5 dB).
- Check the pump and piping for leaks.
- Check for corrosion on parts of the pump and / or on hoses.

Three-month inspections
Perform these tasks every three months:
- Check that the tightenings.
- Check the mechanical seal if the pump has been left idle.

Annual inspections
Perform these inspections one time each year:
- Check the pump capacity (as per nameplate).
- Check the pump pressure (as per nameplate).
- Check the pump power (as per nameplate).

f the pump performance does not satisfy your process requirements, and the process requirements have not changed, then perform these steps:
1. Disassemble the pump.
2. Inspect it.
3. Replace worn parts.

Shutdown procedure

This procedure SHOULD BE CARRIED OUT BY AUTHORIZED AND QUALIFIED PERSONNEL

OPERATOR PROTECTION
Use safety equipment according to the company regulations.
Use this safety equipment within the work area during installation, service and when handling chemicals:
- **protective mask**
- **protective gloves**
- **safety goggles**
- **ear plugs or hear muffs**
- **further security device, if necessary.**

Shutdown the dosing pump **before any maintenance operation** or **before long downtimes**. Disconnect power and ensure it cannot be restarted.

Depressurize the system. The liquid may leak splashing.

Drain the chemical from pump head.
Release the pressure and disconnect the disharge pipe from the discharge valve.
Rinse the pump head and clean all valves.

Delivery curves

Flow rate indicated is for H_2O at 20°C at the rated pressure.
Dosing accuracy ± 2% at constant pressure ± 0,5 bar.

Fig. 13. K PLUS delivery curves

2001: l/h 01 bar 20
Pump head mod. I

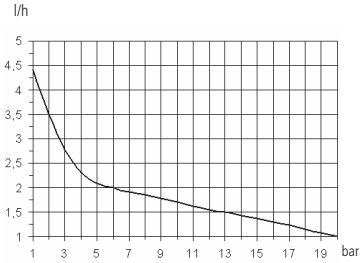

1802: l/h 2 bar 18
Pump head mod. L

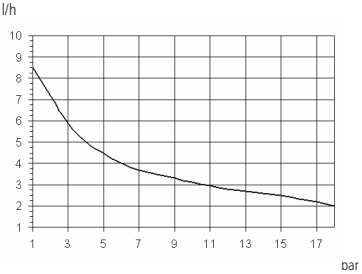

1504: l/h 4 bar 15
Pump head mod. L

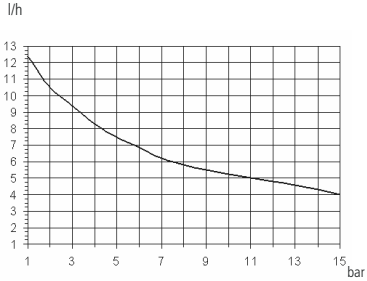

1005: l/h 5 bar 10
Pump head mod. L

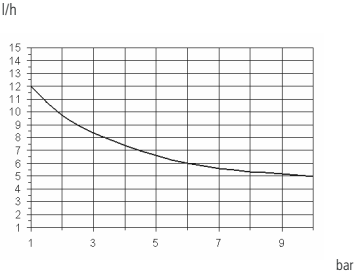

0808: l/h 8 bar 8
Pump head mod. L

0510: l/h 10 bar 5
Pump head mod. L

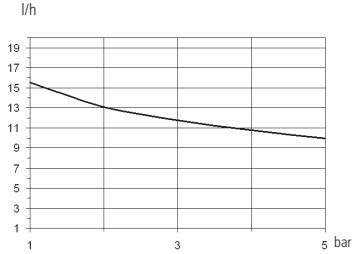

0501: l/h 1 bar 5
Pump head mod. I

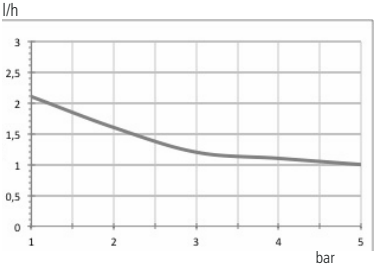

0301: l/h 1 bar 3
Pump head mod. I

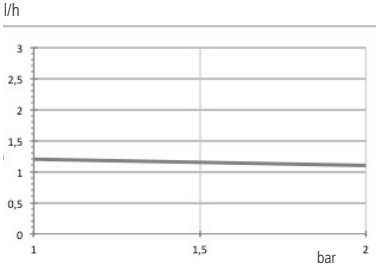

0218: l/h 18 bar 2
Pump head mod. M

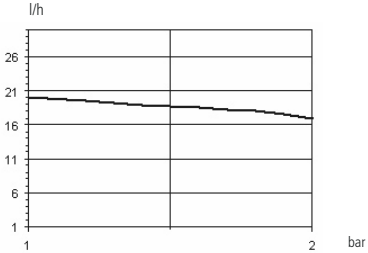

Fig. 14. K A PLUS delivery curves

1801: l/h 1 bar 18
Pump head mod. LA

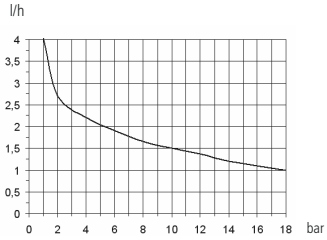

1503: l/h 3 bar 15
Pump head mod. LA

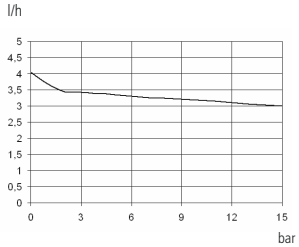

103,5: l/h 3,5 bar 10
Pump head mod. LA

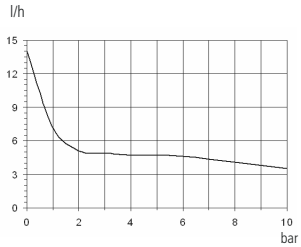

085,5: l/h 5,5 bar 8
Pump head mod. LA

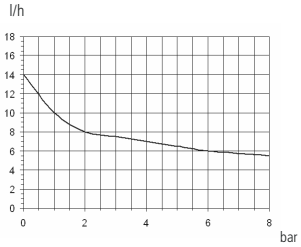

057,5,5: l/h 7,5 bar 5
Pump head mod. LA

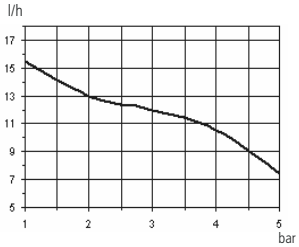

0213: l/h 13 bar 2
Pump head mod. MA

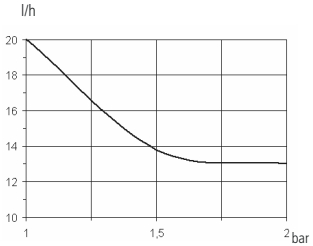

Fig. 15. K AC PLUS delivery curve

1018: l/h 18 bar 10
Pump head mod. M

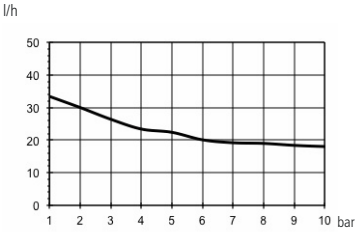

Fig. 16. Dimensions

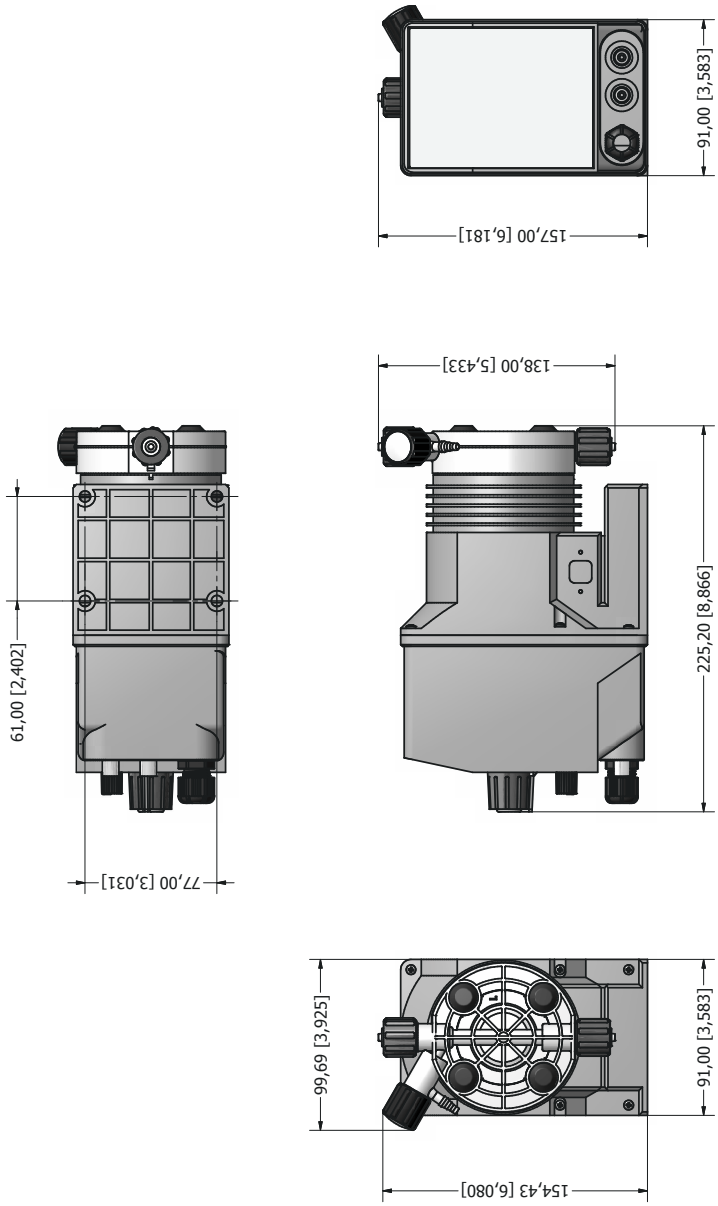

COMPATIBILITY TABLE

Chemical compatibility table

Solenoid driven metering pumps are widely used to dose chemical fluids and it is important that the most suitable material in contact with fluid is selected for each application. This compatibility table serves as a useful help in this respect. All the informations in this list are verified periodically and believed to be correct on the date of issuance. All the informations in this list are based on manufacturer's data and its own experience but since the resistance of any material depends by several factors this list is supplied only as an initial guide, in no way manufacturer makes warranties of any matter respect to the informations provided in this list.

Tab. 8. Chemical compatibility table.

Product	Formula	Ceram.	PVDF	PP	PVC	SS 316	PMMA	Hastel.	PTFE	FPM	EPDM	NBR	PE
Acetic Acid, Max 75%	CH3COOH	2	1	1	1	1	3	1	1	3	1	3	1
Hydrochloric Acid, Concentrate	HCl	1	1	1	1	3	1	1	1	1	3	3	1
Hydrofluoric Acid 40%	H2F2	3	1	3	2	3	3	2	1	1	3	3	1
Phosphoric Acid, 50%	H3PO4	1	1	1	1	2	1	1	1	1	1	3	1
Nitric Acid, 65%	HNO3	1	1	2	3	2	3	1	1	1	3	3	2
Sulphuric Acid, 85%	H2SO4	1	1	1	1	2	3	1	1	1	3	3	1
Sulphuric Acid, 98.5%	H2SO4	1	1	3	3	3	3	1	1	1	3	3	3
Amines	R-NH2	1	2	1	3	1	-	1	1	3	3	1	1
Sodium Bisulphite	NaHSO3	1	1	1	1	2	1	1	1	1	1	1	1
Sodium Carbonate (Soda)	Na2CO3	2	3	1	1	1	1	1	1	2	1	1	1
Ferric Chloride	FeCl3	1	1	1	1	3	1	1	1	1	1	1	1
Calcium Hydroxide (Slaked Lime)	Ca(OH)2	1	1	1	1	1	1	1	1	1	1	1	1
Sodium Hydroxide (Caustic Soda)	NaOH	2	3	1	1	1	1	1	1	2	1	2	1
Calcium Hypochlor.(Chlor.ted Lime) [1]	Ca(OCl)2	1	1	1	1	3	1	1	1	1	1	3	1
Sodium Hypochlorite, 12.5%	NaOCl + NaCl	1	1	2	1	3	1	1	1	1	1	2	3
Potassium Permanganate, 10%	KMnO4	1	1	1	1	1	1	1	1	1	1	3	1
Hydrogen Peroxide, 30% (Perydrol)	H2O2	1	1	1	1	1	3	1	1	1	3	3	1
Aluminium Sulphate	Al2(SO4)3	1	1	1	1	1	1	1	1	1	1	1	1
Copper-II-Sulphate (Roman Vitriol)	CuSO4	1	1	1	1	1	1	1	1	1	1	1	1

[1] Calcium Hypochlor.(Chlor.ted Lime): WQA test was based on 1% Calcium Hypochlorite solution.

Materials

Polyvinyldene fluoride (PVDF) .....Pump heads, Valves, Fittings
Polypropylene (PP).....Pump heads, Valves, Fittings
PVC .....Pump heads
Stainless steel (SS 316).....Pump heads, Valves
Polymethyl Metacrilate Acrylic (PMMA) ...Pump heads
Polytetrafluoroethylene (PTFE) .....Diaphragm
Fluorocarbon (FPM).....O-ring
Ethylene propylene (EPDM).....O-ring
Nitrile (NBR).....O-ring

Hose resistance table

Hose features are very important for a reliable dosage. Every pump's model is made to work in the best way using selected hoses according to pump's capacity / model. Information reported here are intended for standard use only. For extended information ask to hose's manufacturer.

Tab. 9. Hoses features

Suction / Delivery Hose			
4x6 mm PVC (transparent)	4x8 mm PE (opaque)	6x8 mm PE (opaque)	8x12 mm PVC (transparent)

Delivery Hose	Working Pressure				Breaking Pressure			
	20°C	30°C	40°C	50°C	20°C	30°C	40°C	50°C
4x6 mm PE 230 (opaque)	12 bar	10.5 bar	8.5 bar	6.2 bar	36 bar	31.5 bar	25.5 bar	18.5 bar
4x8 mm PE 230 (opaque)	19 bar	15.7 bar	12 bar	7.5 bar	57 bar	47 bar	36 bar	22.5 bar
6x8 mm PE 230 (opaque)	8.6 bar	6.8 bar	4.8 bar	2.3 bar	26 bar	20.5 bar	14.5 bar	7 bar
8x12 mm PE 230 (opaque)	12 bar	10.5 bar	8.5 bar	6.2 bar	36 bar	31.5 bar	25.5 bar	18.5 bar

	20°C	30°C	40°C	50°C	60°C	80°C	90°C
4x6 mm PVDF Flex 2800 (opaque)	40 bar	34 bar	30 bar	27 bar	24.8 bar	20 bar	10 bar
6x8 mm PVDF Flex 2800 (opaque)	29 bar	25.5 bar	22 bar	20 bar	18 bar	14.5 bar	7.3 bar
8X10 mm PVDF Flex 2800 (opaque)	18 bar	15.5 bar	13.5 bar	12.5 bar	11.2 bar	9 bar	4.5 bar

	20°C
¼ PE 230 (opaque)	17.6 bar
⅜ PE 230 (opaque)	10.6 bar
½ PE 230 (opaque)	10.6 bar

PRODUCT SERVICE REPAIR FORM

ENCLOSE THE PRESENT FORM TO THE DELIVERY NOTE

DATE .....

SENDER

Company name.....

Address .....

Phone no. .....

Contact person.....

PRODUCT TYPE (see product label)

DEVICE CODE .....

S/N (serial number).....

OPERATING CONDITIONS

Location/installation description .....

.....

Chemical .....

Start-up (date) ..... Running time (approx. hours).....

REMOVE ALL THE LIQUID INTO THE PUMP HEAD AND DRY IT BEFORE PACKAGING IN ITS ORIGINAL BOX.

DESCRIPTION OF PROBLEM

☐ MECHANICAL

- Wear parts.....
- Brekage/other damages .....
- Corrosion.....
- Other.....

☐ ELECTRICAL

- Connections, connector, cables .....
- Operating controls (keyboard, display, etc.) .....
- Elettronics.....
- Other.....

☐ LEAKS

- Connections.....
- Pump head .....

☐ NOT OR INADEQUATE FUNCTION/OTHER

.....

.....

.....

I declare that the dosing pump is free of any hazardous chemical.

Signature of the compiler

Company stamp

TABLE OF CONTENTS

GENERAL SAFETY GUIDELINES 2
PURPOSE OF USE AND SAFETY 3
ENVIRONMENTAL SAFETY.....4
LABEL.....4
SPARE PARTS.....4
Included into package 5
DESCRIPTION 6
K PLUS..... 6
K CO PLUS 6
K CL PLUS..... 6
Self venting: KA PLUS 6
Features..... 8
Manual stroke length adjustment..... 9
Materials..... 9
INSTALLATION.....10
How to install metering pump..... 10
User health and safety..... 10
The work area 10
Pump location..... 10
Requirements for product positioning 10
PIPING CONNECTIONS 12
Foot filter / Level probe 12
(included only in some models)..... 12
Suction hose connection..... 13
Pump head / delivery hose assembling procedure
..... 13
Injection valve 14
Venting hose..... 14
KA PLUS self venting pump head connection . 15
WIRING 16
Preliminary checks..... 16
Pump's wiring 17
Level alarm output (option) 17
PRIMING 18
Warnings 18
Manual priming..... 18
Automatic priming 18
CONTROL PANEL 19
Keyboard function 19
K PLUS 19
K CL PLUS.....19
K CO PLUS.....19
LEVEL led..... 20
PROGRAMS led..... 20
PROGRAMMING THE PUMP 21
Start/shutdown 21
Set the PROGRAM..... 21
PROGRAMS 21
mA mode..... 22
CONSTANT mode..... 22
CONSTANT with divider mode 22
MULT 1÷10 mode 23
DIV 1÷10 DIV 10÷100 DIV 100÷1000 mode . 23
Calculate the N factor..... 23
TROUBLESHOOTING.....24
Repair service..... 24
Fuse replacement procedure 25
Main board replacement procedure 25
Main board 26
MAINTENANCE 27
Maintenance schedule..... 27
Maintenance inspection 27
Shutdown procedure 28
Delivery curves 29
Dimensions 33
COMPATIBILITY TABLE 34
Chemical compatibility table..... 34
Materials..... 34
Hose resistance table..... 35

FIGURES

Fig. 1. Product label. 4
Fig. 2. WQA label.... 4
Fig. 3. K PLUS - KA PLUS.... 7
Fig. 4. Installation 11
Fig. 5. Level probe assembling diagram. 12
Fig. 6. Suction hose assembling.... 13
Fig. 7. Delivery hose / pump head assembling.... 13
Fig. 8. Manual venting pump head model (K PLUS).... 14
Fig. 9. Self-venting models pump head: IA, LA, MA, (KA PLUS). 15
Fig. 10. Electrical installation.... 16
Fig. 11. Wirings 17
Fig. 12. Main board scheme 26
Fig. 13. K PLUS delivery curves 29
Fig. 14. K A PLUS delivery curves 31
Fig. 16. Dimensions 33

TABLES

Tab. 1. Capacity (manual and self venting models) 8
Tab. 2. Capacity (compressed air model).... 9
Tab. 3. Keys functions 19
Tab. 4. Led LEVEL 20
Tab. 5. Led PROGRAMS 20
Tab. 6. Programs menu 21
Tab. 7. Guide to troubleshooting.... 24
Tab. 8. Chemical compatibility table. 34
Tab. 9. Hoses features.... 35

PRECAUTIONS RELATING TO DIRECTIVES, REGULATIONS AND STANDARDS

§ CE/EU and UKCA marking

We guarantee that this product meets the essential requirements of the applicable Directives and Regulations based on the following specifications. Please carefully consider the following specifications for use of the product in European Union member countries and the United Kingdom.

• CE/EU harmonized directives and standards

Directives
DIRECTIVE 2006/42/EC
DIRECTIVE 2014/35/EU
DIRECTIVE 2014/30/EU
DIRECTIVE 2011/65/EU
DELEGATED DIRECTIVE (EU) 2015/863

Harmonized standards
EN ISO 12100
EN 809
EN ISO 20361
EN IEC 61326-1
EN 61010-1
EN IEC 63000

• UKCA harmonized regulations and standards

Regulations
2008 No. 1597
2008 2016 No. 1091
2016 No. 1101
2012 No. 3032

Harmonized standards
BS EN ISO 12100
BS EN 809
BS EN ISO 20361
BS EN IEC 61326-1
BS EN 61010-1
BS EN IEC 63000

Disposal of end-of-life equipment by users

This symbol warns you not to dispose of the product with normal waste. Respect human health and the environment by giving the discarded equipment to a designated collection center for the recycling of electronic and electrical equipment. For more information visit the online site.

When dismantling a pump please separate material types and send them according to local recycling disposal requirements. We appreciate your efforts in supporting your local Recycle Environmental Program. Working together we'll form an active union to assure the world's invaluable resources are conserved.