R990525

KMS - KMSA - KMS LPV

PRODUCT LABEL

EN

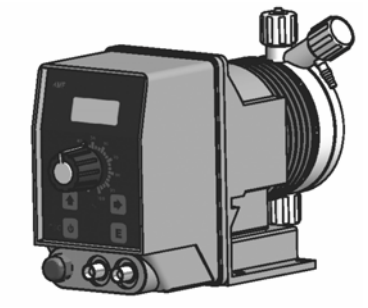

KMS

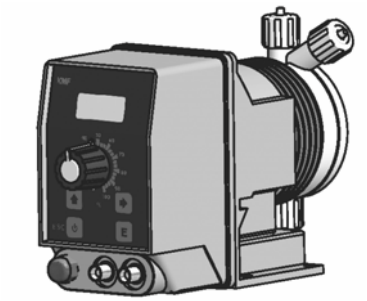

KMSA

SOLENOID DRIVEN METERING PUMPS
WITH DIAPHRAGM

OPERATING MANUAL

This operating instructions contains safety information that if ignored can endanger life or result in serious injury.

Read these instructions **carefully** before use and keep them for future reference.

Information and specifications on this manual could be uncorrect or could have printing errors. Specifications are subject to change without notice.

Version: R1-02-14

Product Identification Codes
(the "_" symbols complete the product code based on the configuration of the variants)
Codici Identificativi Prodotto
(i simboli "_" completano il codice del prodotto in base alla configurazione delle varianti)

KPO _____	KIP _____	KAN _____
KPA _____	KLA _____	KAF _____
KPL _____	KLC _____	KAD _____
KUA _____	KLU _____	KCD _____
KSP _____	KMF _____	KCF _____
KSU _____	KMX _____	KMH _____
KMU _____	KPI _____	KML _____
KAU _____	KEN _____	KMM _____
KAM _____	KFS _____	KPH _____
KCC _____	KDC _____	KRH _____
KCS _____	KAR _____	

GENERAL SAFETY GUIDELINES

Operating, installing, or maintaining the unit in any way that is not covered in this manual could cause death, serious personal injury, or damage to the equipment.

ICON

This manual use the following safety message icon:

Danger!
Indicates a hazardous situation which, if not avoided, will result in death or serious injury.

Warning!
Indicates a hazardous situation which, if not avoided, could result in death or serious injury.

Important - A practice not related to personal injury or additional information.

Cross reference - An instance which refers to related information elsewhere in the same document

PURPOSE OF USE AND SAFETY

METERING PUMP IS INTENDED FOR CHEMICAL DOSING AND DRINKING WATER TREATMENT.

Do not use in explosive area (EX).
Do not use with flammable chemicals.
Do not use with radioactive chemicals.

Use after a proper installation.

Use the pump in accordance with the data and specifications printed on the label.

Do not modify or use in a manner inconsistent with the provisions of the operating manual.

Keep the pump protected from sun and water. Avoid water splashes.

In emergencies the pump should be switched off immediately. Disconnect the power cable from the power supply.

When using pump with aggressive chemicals observe the regulations concerning the transport and storage of aggressive fluids.

When installing always observe national regulations.

Manufacturer is not liable for any unauthorized use or misuse of this product that may cause injury, damage to persons or materials.

Pump must be accessible at all times for both operating and servicing. Access must not be obstructed in any way.

Feeder should be interlocked with a no-flow protection device.

Pump and accessories must be serviced and repaired by qualified and authorized personnel only.

Before any operation:
- **always read chemical Material Safety Data Sheet (MSDS);**
- **always wear protective clothing;**
- **always discharge the liquid end before servicing the pump.**
- **empty and rinse the liquid end before work on a pump which has been used with hazardous or unknown chemicals.**

This equipment requires regular maintenance to ensure potability requirements of the water and maintenance of improvements as declared by the manufaturer.

ENVIRONMENTAL SAFETY

Work area
Always keep the pump area clean to avoid and/or discover emissions.

Recycling guidelines

EWC code: 16 02 14

Always recycle according to these guidelines:
1. If the unit or parts are accepted by an authorized recycling company, then follow local recycling laws and regulations.
2. If the unit or parts are not accepted by an authorized recycling company, then return them to the nearest representative.

Waste and emissions regulations
Observe these safety regulations regarding waste and emissions:
- Dispose appropriately of all waste.
- Handle and dispose of the dosed chemical in compliance with applicable environmental regulations.
- Clean up all spills in accordance with safety and environmental procedures.
- Report all environmental emissions to the appropriate authorities.

LABEL

Fig. 1. Product label.

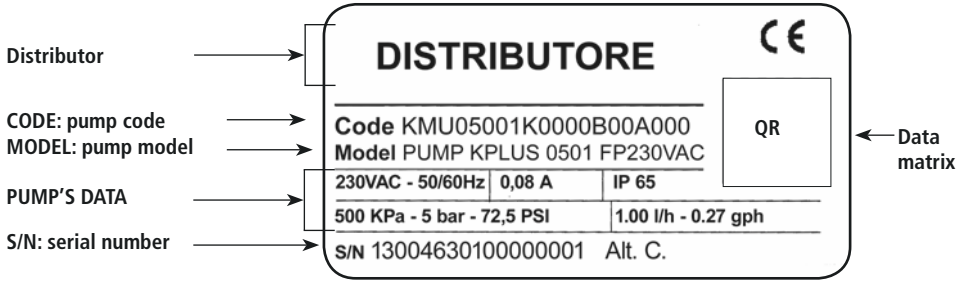

SPARE PARTS

For spare parts orders or any other communication, refer to the pump's label.
Code (CODE) and serial number (S / N) uniquely identify the pump.

TRANSPORTATION AND STORAGE

A not suitable transportation or storage can cause damages.

Use origianal box to pack the pump.

Observe storage conditions also for transportation.

Although packed, always protect the unit against humidity and the action of chemicals.

Before return the dosing pump to the manufacturer Repair service, drain the chemical from pump head and rinse it. Refer to **Shutdown procedure.**

Fill the PRODUCT SERVICE REPAIR FORM and send it with the dosing pump.
Repair service is not accepted if PRODUCT SERVICE REPAIR FORM is missing.

DO NOT TRASH PACKAGING. USE IT TO RETURN THE PUMP.

Transportation and storage temperature ..... 10-50°C (32-122°F)
Umidity ..... 95% relative humidity (not condensed)

1. Introduction

Introduction:
Metering Pumps "KMS" Series are the ideal solution for low / middle dosing of chemicals. All control and setup parameters are available through a digital keyboard and they are displayed on a LCD backlit display. Stand-by input (N.O. contact)available on some models.

Pump's capacity
Flow rate is determined by the stroke length and by the stroke speed. The stroke length is adjustable from 0 to 100% using the stroke length adjustment knob. However dosing accuracy is guarantee within an adjustment range from 30% to 100%.

Models:

KMS EN
Pump with weekly timer, microprocessor, digital controls, LCD display, level probe and electrovalve control.

KMS PH
Proportional pump driven by internal built-in pH meter (0÷14 pH) and level control. pH electrode input (electrode not included).

KMS RH
Proportional pump driven by internal built-in Redox (ORP) meter (0÷1000mV) and level control. Redox electrode input (electrode not included).

KMS CL
Proportional pump for free chlorine (Cl_2) control (from 0 to 10,00 mg/l) with level control, supplied without chlorine probe. It operates with chlorine cells mod. ECL1 or ECL 4/5/6/7/12.

KMS LPV: viscosity up to 8.000 cPs

KMS LPV is the KMS version with PMMA pump head for **liquids with max viscosity 8.000 cPs.**
Funtioning mode is the same as KMS.
Flow may change according to viscosity. Flow rates indicated refer to a measure with water.
Liquid ends: 3/4" injection valve, 16x22 PVC suction hose and 8x12 PE injection hose.
Not included: Stainless steel foot filter with valve.

Capacity:

Pressure (bar)	Capacity (l/h)
20	01
18	02
15	04
10	05
08	08
05	10
02	18

Self-venting models	
Pressure (bar)	Capacity (l/h)
18	01
15	03
10	3.5
05	7.5
02	13

Legend:

a. Alternating Current; ~

b. DC, ⎓

c. Protective Earth; ⏚

d. Standby; ⏻

e. Warning - ⚠

2. Unpacking

Included into package:

QUANTITY	STANDARD CONTENT	**KMS**	**KMSA**	**KMS LPV**
n. 4	ø6 dibbles	●	●	●
n. 4	4,5 x 40 self tapping screws	●	●	●
n. 1	5 X 20 delayed fuse	●	●	●
n. 1	level probe with axial foot filter (PVDF)	●	●	
n. 1	0,3 bar injection valve (PVDF)	● 1/2"	● 1/2"	● 3/4" SS BALLS
m 2	delivery hose [1]	● PVDF	● PVDF	● PE
m 2	suction hose [1]	● PE	● PE	● PVC
m 2	venting hose	● PVC		
m 0,3	priming hose and syringe			● PVC
m 2,5	stand-by/alarm cable	●	●	●
n.1	operating manual	●	●	●

[1] If hose is 6x8 there is only a 4meters long hose. Cut to obtain suction and delivery hoses.

PLEASE DO NOT TRASH PACKAGING.
IT CAN BE USED TO RETURN THE PUMP.

3. Pump's description

KMS

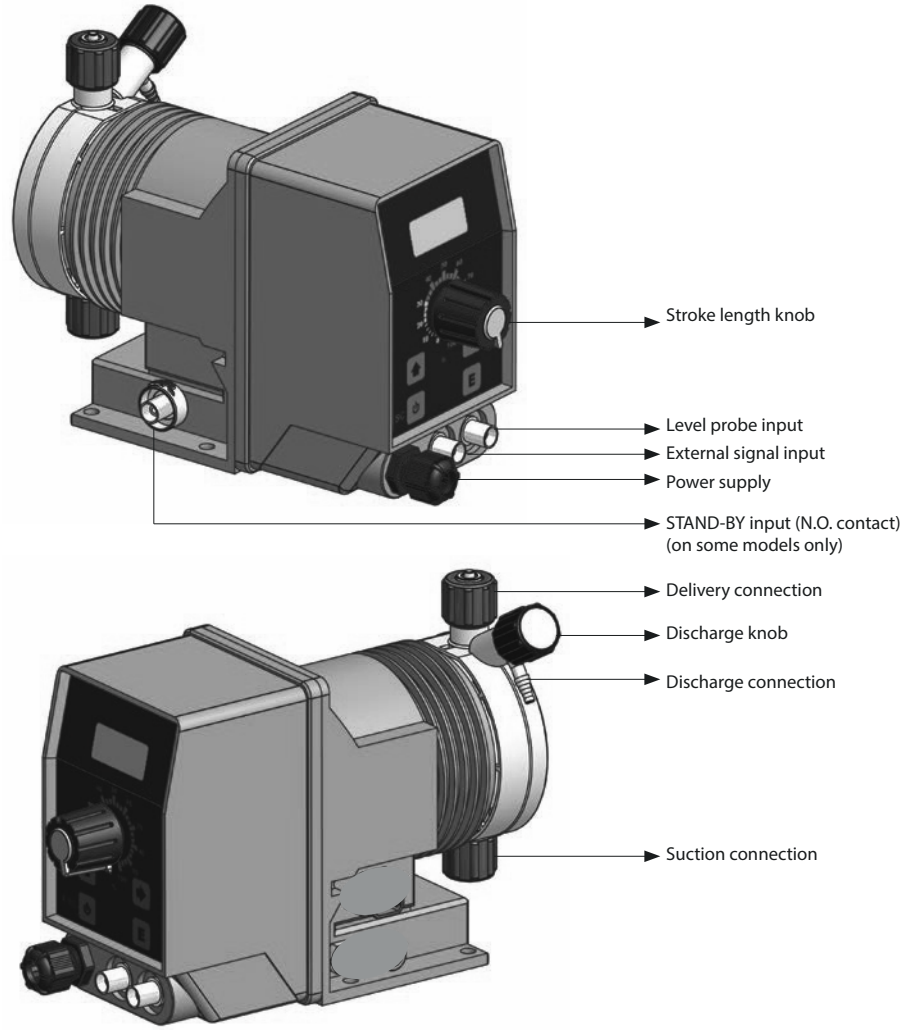

Manual stroke length adjustment

Max CC/stroke (⧉ **Construction Materials and Technical info**) are referred to Stroke length knob on 100%.
If Stroke length knob is on 50% cc/stroke will be halved.
To regulate pump's capacity: turn on the pump then press and rotate the knob.

Dosing accuracy is guarantee within an adjustment range from 30% to 100%.

Note: if knob isn't on 100% position then the pump will dose at a pressure greater than the one declared on label.

4. Before to Install warnings

Pump's installation and operativity is made in 4 main steps:

Pump's installation
Hydraulic Installation (hoses, level probe, injection valve)
Electrical Installation (main power connection, priming)
Programming the pump.

Before to start, please read carefully the following safety information.

Protective clothes

Wear always protective clothes as masks, gloves, safety glasses and further security devices during ALL installation procedure and while handling chemicals.

Installation location

Pump must be installed in a safety place and fixed to the table / wall to avoid vibration problems!

Pump must be installed in a easy accessible place!

Pump must be installed in horizontal position!

Avoid water splashes and direct sun!

Hoses and Valves

Suction and delivery hoses must be installed in vertical position!
All hoses connections must be performed using only hands' force!
No tongs required!

Delivery hose must be firmly fixed to avoid suddenly movements that could damage near objects!

Suction hose must be shorter as possible and installed in vertical position to avoid air bubbles suction!

Use only hoses compatibles with product to dose! See Chemical Compatibility Table. If dosing product is not listed please consult full compatibility table or contact chemical's manufacturer!

Feeder should be interlocked with a no-flow protection device to automatically shut-off the pumps when there is no flow!

Adequate measures shall be taken to prevent cross connection of chemicals!

Chemical feeding must be stopped during backwash cycles and periods of noflow as these conditions may introduce the potential for chemical overdosing. Not doing so may result in elevated chemical concentrations and hazerdous gas introduction into the pool or spa.

5. Installation Draw

Pump must be installed in a stable support (for example a table) at a maximum height (**from tank's bottom**) of **1,5 meters**.

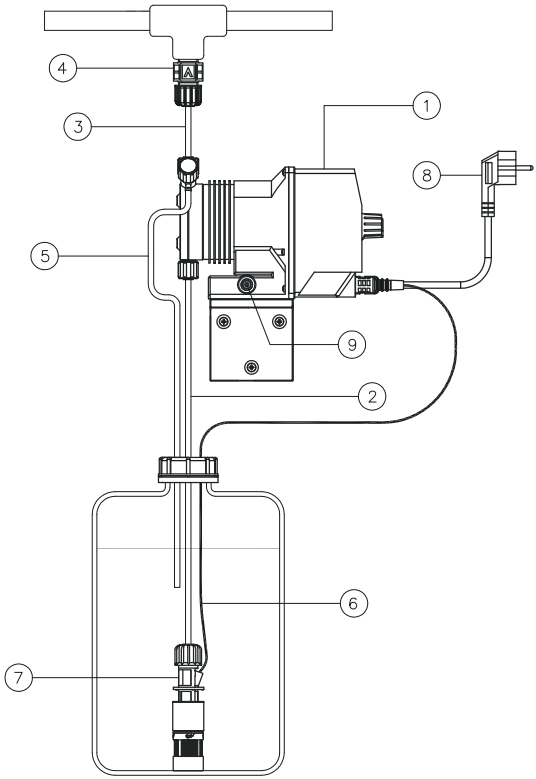

1 - Dosing Pump
2 - Suction Hose
3 - Delivery Hose
4 - Injection Valve
5 - Air discharge
6 - Level Probe
7 - Foot Filter
8 - Power Cable

6. Hydraulic Installation

Hydraulic connections are:

Suction Hose with level probe and foot filter
Delivery Hose with injection valve
Discharge Hose

Suction Hose.

Completely unscrew tightening nut from pump's head and remove assembling components: tightening nut, holding ring and pipe holder.

Assembly as shown in fig. (A). Insert hose into pipe holder until it reaches the bottom.

Lock hose on pump's head by screwing down the tightening nut.
Use only hands to do it!

Connect other side of the hose to the foot filter using the same procedure.

fig. (A)

6. Hydraulic Installation

Assembling foot filter with level probe.

Level probe must be assembled with foot filter using the provided kit.
Foot valve is made to be installed into tank's bottom without sediments priming problem.

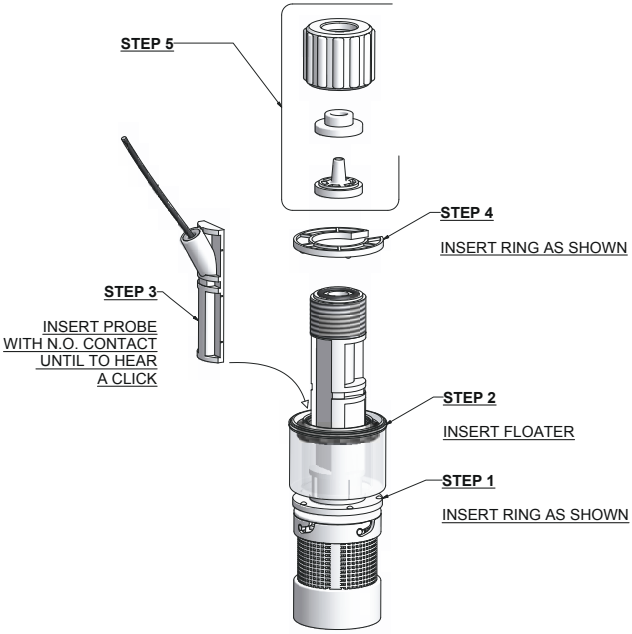

Connect BNC from level probe into pump's level input (front side of the pump).
Put level probe assembled with foot filter into tank's bottom.

Warning: If there is a mixer installed into tank, install a suction lance instead of level probe / foot filter.

Delivery Hose.

Completely unscrew tightening nut from pump's head and remove assembling components: tightening nut, holding ring and pipe holder.

Assembly as shown in fig. (A). Insert hose into pipe holder until it reaches the bottom.

Lock hose on pump's head by screwing down the tightening nut.
Use only hands to do it!

Connect other side of the hose to the injection valve using the same procedure.

6. Hydraulic Installation

Injection Valve.

Injection valve must be installed on plant from water's input.
Injection valve will open at pressure greater than 0,3bar.

Dicharge hose.

Insert one side of discharge hose into discharge connector as shown in fig (C).

Insert other side of discharge hose into product's tank.
During priming procedure product exceeding will flow into tank.

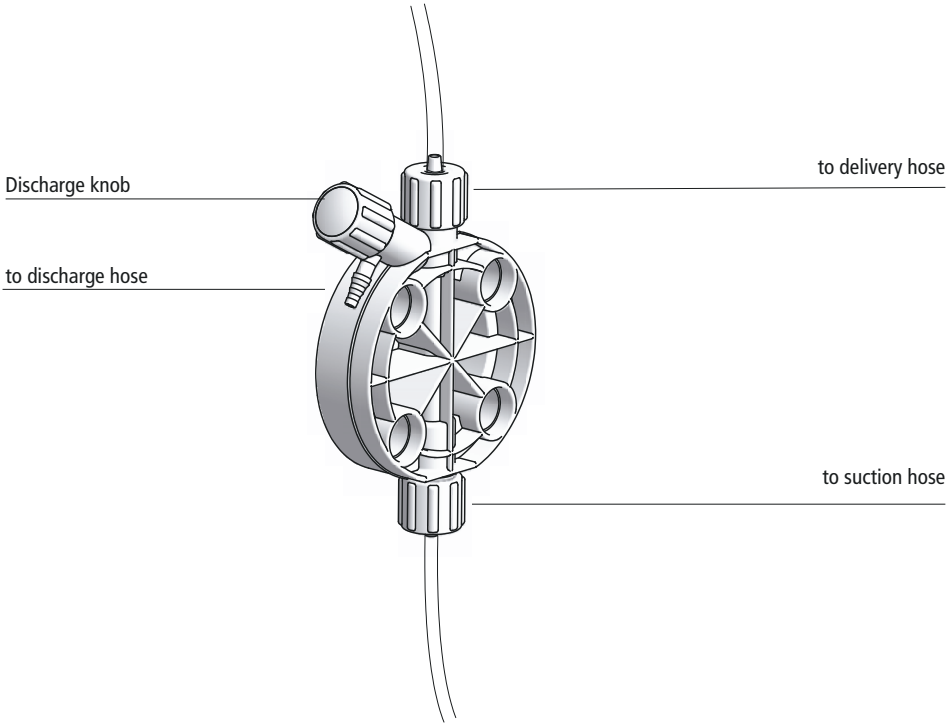

fig (C)

For priming procedure see the paragraph "Priming".

6. Hydraulic Installation

Self-venting pump head.

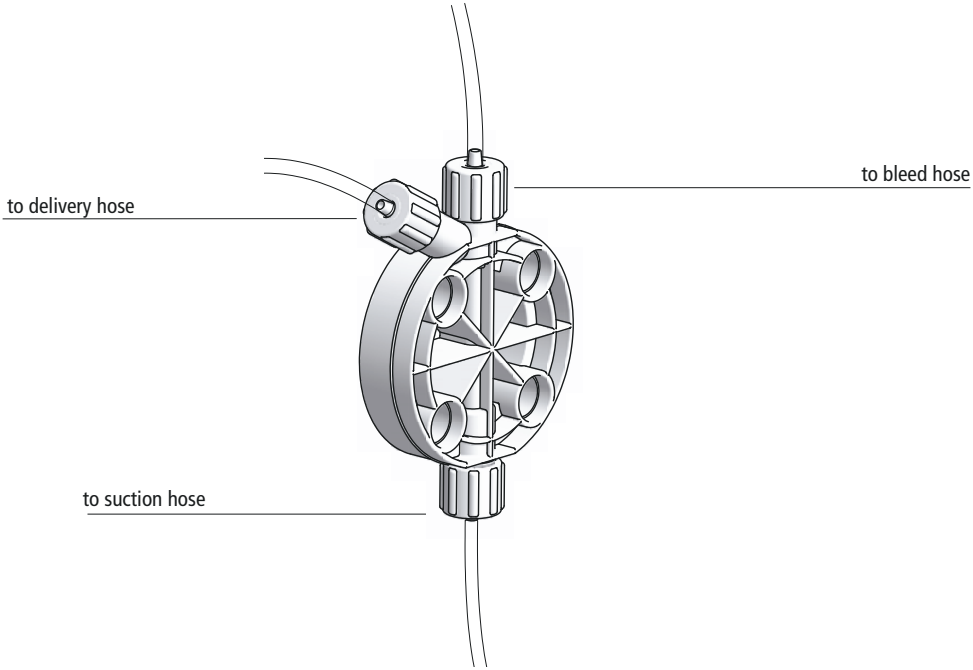

Self-venting pump head must be used when using chemicals that produce gas (i.e. hydrogen peroxide, ammonium, sodium hypoclorite at particular conditions).

Hoses assembling procedure (including purge hose) is described in fig. (A).

Notes:

- suction, delivery and purge valves are DIFFERENT! Do not exchange them!

- delivery and purge hoses are made of same material!

- it's allowed to lightly bend discharge hose!

- during calibration procedure ("TEST") insert discharge hose into BECKER test-tube!

7. Electrical Installation

All electrical connections must be performed by **AUTHORIZED AND QUALIFIED** personnel only. Before to proceed, please, verify the following steps:

- verify that pump's label values are compatible with main power supply.

- pump must be connected to a plant with a differential switch (0,03A sensitivity) if there isn't a good ground.

- to avoid damages to the pump do not install it in parallel with heavy inductance load (for example: engines). A relay switch must be used. See below picture.

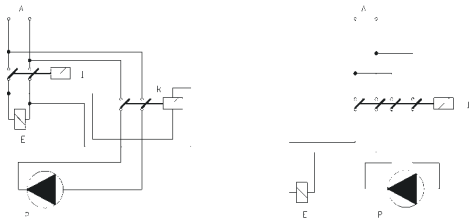

P - Dosing Pump
R - Relay
I - Switch or safety device
E - Electrovalve or inductance load
A - Main Power

7. Electrical Installation

Once verified previous steps proceed as follows:

- check that "BNC" of level probe has been connected as described in "Hydraulic Installation" chapter.

- connect "BNC" and external signal to pump's "INPUT" connectors.

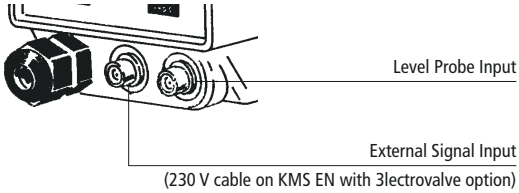

WARNING
IF EQUIPMENT IS SUPPLIED WITH A PLUG:

If an appliance coupler or separable plug is used as the disconnecting device, it shall be readily identifiable and easily reached by the operator. For single-phase portable equipment, a plug on a cord of length not greater than 3m is considered to be easily reached.

WARNING
IF EQUIPMENT IS NOT SUPPLIED WITH A PLUG:

a) a switch or circuit-breaker shall be included in the building installation
b) it shall be in close proximity to the equipment and within easy reach of the operator
c) it shall be marked as the disconnetting device for the equipment

8. Priming

PRIMING

Power on the pump. The display will show "F150M" (default setting).

To prime the pump without touching chemicals please perform these operations:

1. Connect all hoses into proper places (delivery hose, suction hose, outgassing hose).

2. Open outgassing valve and turn on the pump.

3. Set pump's single injection at 100%.

4. For KMS EN pump's model: select programming mode "Manual"; keep pressed "UP" key.
   For KMS PH / KMS RH / KMS CL pump's model: keep pressed "RIGHT" key.
   The display will show "MAN" (50% pulses set for priming).
   All air inside the pump head will exit through the outgassing outlet.

5. When product will leak from it, close immediately the outgassing valve. If dosing product is particularly dense, to facilitate the priming, insert on vent pipe a syringe of 20 cc and suck inside.

9. Programming the pump

All dosing pumps are equipped with a keyboard that basically works in the same way for all pump's model. To avoid any misunderstanding during this chapter all keys will be described as shown on this legend:

is the "UP" key

is the "DOWN" key

is the "RIGHT" key

is the "P" key

is the "ENTER" key

The buttons feature automatic fast advancement: keeping pressed the button it will gradually advance the value shown. Voltage Visualization: keeping pressed "Down" the display will show the actual mains voltage.

10. Programming the pump KMS EN

PROGRAMMING "KMS EN" PUMP

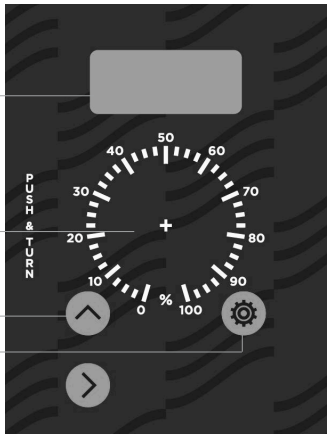

LCD Display

Stroke length adjustment knob

Navigational keys

Program mode key

Model pump (KMS EN only)

Turn "ON" the pump. Display shows:

< NEXT >
Tue10:57

This is the next dosing time. For example on Tuesday at 10:57 o'clock. Press the **"RIGHT"** key the display shows:

Cc/day
0.0

This is the product's flow quantity for each day. Press the **"RIGHT"** key the display shows:

Total cc
624.6

Press the **"RIGHT"** key the display shows:

DATE Mon
24/07/00
Press the **"RIGHT"** key the display shows:

TIME
9:44:14

Press the **"RIGHT"** key again, the display will shows the initial picture.

HOW TO PROGRAM "KMS EN" ?

10. Programming the pump

Keep pressed **"P"** key for at least 4 second. The display shows:

CODE
->0 0 0 0

This is the code (password) to enter into pump's "programming mode". Press **"RIGHT"** key to scroll through the numbers and insert the proper code. Default code is 0000. To confirm, press **"P"** key. The display shows:

-> Manual
Clock

Use **"UP"** (scroll up) and **"RIGHT"** keys (scroll down). Options are:

Manual
Clock
Progr.
Inject
Water
Code
LineVo
Exit

Manual option:

To select "Manual" press **"P"** key (option is selected when **->** is on it). The display shows:

Cc
65.0

To start the pump keep pressed the **"UP"** key. The pump will begin to dose. The dosed quantity does not affect pump's "Total Counter". To stop the pump leave the **"UP"** key. To reset this counter press **"RIGHT"** key. To exit from "Manual" mode press **"P"** key.

Clock option:

The display shows date and time. Using **"UP"** (scroll) and **"RIGHT"** (change value) keys. Date's format is: DD/MM/YY. To confirm press **"P"** key.

Progr. Option:

To select "Progr." press **"P"** key (option is selected when the -> arrow is on it). The display shows:

1) 0:00
Mon Off

The 1) is the program 1 of 16. This pump can be set for a maximum of 16 daily programs.

10. Programming the pump

0:00 is the starting time.

Mon is the dosing day. It is possible to scroll it and choose/add another day. An asterisk* means that dosing is activated for that day.

Off is program's status.

Using **"RIGHT"** key the display shows:

0000 cc
000 min

0000 cc is product's quantity to dose.
000 min is dosing time (minutes).

Example:

The pump must dose 400cc every Tuesday and Friday at 14:30.

In "Progr." Menu the display shows:

1) 0:00
Mon Off

Select the program's number using **"UP"** key. In this case leave it as appears but remember that it is possible to scroll through 16 programs. Press **"UP"** key and edit start time (0:00) using **"RIGHT"** key and enter 1 - 4 - 3 - 0 using **"UP"** key (the cursor blinks on selected value). Press **"RIGHT"** key until the cursor will blink on "Mon". Press **"UP"** key until the display shows "Tue". To enable this day press **"P"** key. An *asterisk confirm selected day. Press **"UP"** key until display shows "Tue". To enable this day press **"P"** key. An *asterisk confirm selected day. Now press **"RIGHT"** key until the cursor blinks on "On". Leave as it is. To disable the current program 1 press the **"UP"** key. Press **"RIGHT"** key until display shows:

0000 cc
000 min

To change the cc value of each digit press **"UP"** key. To move the cursor to next digit or to "min" press **"RIGHT"** key. To change min value (minutes required for dosing) for each digit press **"UP"** key.
Move cursor to next digit with **"RIGHT"** key. **The "min" parameter must be calculated on pump's flow capacity.** For example: to dose 400cc using a pump with 0.9 cc/stroke (150 stroke/min) and knob set on 100%, dosing time is about 3 minutes (150x0.9=135cc/min. 400/135=3 minutes). Once entered the values press **"P"** to confirm and save the program. It is possible to confirm/save the programmed mode during every program's step.
Important note: Do not set two programs with a common time's period during the same day. Doing this, pump will not accomplish last edited program.

Inject option:

The display shows:

Cc/imp

10. Programming the pump

01.00

This value is set using pump's knob with pump's flow after a complete test of plant: flow, backpressure, product to dose, etc...

Water option:

The display shows:

B -> 04 sec
A 05 sec

"B" means "Before" (min:0 seconds ; max: 60 minutes); "A" means "After" (min:0 seconds; max: 60 minutes). Pump has a 220Vac output for a relay. This function is useful for opening an electrovalve before/after the dosing time. "B" means that output is activated 4 seconds before the program ends. "A" means that output is activated 5 seconds after the program ends. Use **"UP"** key to change selected value. If entered value is greater than 60 seconds the pump will change unit from seconds to minutes.

Code option:

The display shows:

Mod Code
->0 0 0 0

This is the code (password) for pump "programming mode". Press **"RIGHT"** key to scroll through the numbers and enter proper code. Default code is 0000. Press **"P"** key to enter.

LineVo option:

Not editable. It shows (real-time) the power supply voltage according to pump's working range.

Exit option:

To exit from programming mode.

HOW TO RESET THE PUMP?

Unplug pump's power cable from supply and while pressing **"UP"** and **"RIGHT"** keys connect the pump's power cable. The display shows:

ERROR CK

10. Programming the pump

MAKE SET
Press P
To reset

Press **"P"** key and pump will shows:

ERASE
EPROM

Remember that after pump's reset all programming values, inject value, date and time, etc have been deleted and must be entered again.

11. Programming the pump KMS PH

PROGRAMMING "KMS PH" PUMP

Pump model (KMS "PH")

LCD Display

Stroke length adjustment knob

Navigational keys

Exit from program menu / Right Key

Program key

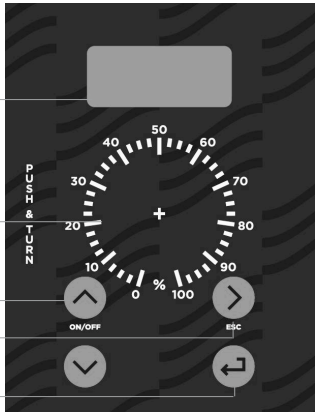

Note: it is possible to program the pump for dosing either acid or alkaline, ensuring that o-rings match the additive chemical compatibility

Entering in program mode

Turn on the pump. Keep pressed **"E"** key for at least 4 seconds to enter in program mode. Pump's display shows:

PASSWORD:
—> 0000 **fig.1**

Use **"UP"** and **"DOWN"** keys to edit the password, press **"RIGHT"** to move on next digit.

"SETUP" program

Once entered the password, pump's display shows:

—> SETUP
PARAM **fig.2**

Move arrow on SETUP then press **"E"** key:

"SET POINT" program

Setup
1) Point **fig.3**

Press **"E"** key:

11. Programming the pump

a)–> 00%
7.30pH **fig.4**

The display shows that pump does not work at 00% if pH is 7.30. Make sure that arrow is on "7.30 pH" to change this value, then use **"UP"** and **"DOWN"** keys to enter a new value. Use **"RIGHT"** key to move on next value. Once on "00%", change it with **"UP"** and **"DOWN"** keys.

b) -> 100%
7.80pH **fig.5**

The display shows that pump works when pH is 7.80. Make sure that arrow is on "7.80pH" to change this value, then use **"UP"** and **"DOWN"** keys to enter a new value. Use **"RIGHT"** to move on next value. Once on "100%", change it with **"UP"** and **"DOWN"** keys. Press **"E"** key to confirm values and quit from programming mode. Display shows for a few seconds: DATA SAVED. To exit from program mode press "RIGHT" key twice. Now the pump will modify proportionally its own dosing capacity in the range between 7.30pH and 7.80pH. On previous example, dosing mode is for "acid".

Probe calibration

To obtain a reliable measurement it is necessary (during installation) calibrate the probe. To do this, two buffer solutions are needed: a 7.00pH buffer solution and a 4.00pH or 9.00pH buffer solution. Proceed as follows:
1) Measure buffer solution temperature and verify if it is the same printed on solution's label.
2) Insert probe's connector (blue colour) into pump's input connector.
3) Remove protective cap from probe and wash it into water. Then dry it.

Into "Setup" menu (fig.3), choose "2)Calib" then press **"E"** key. The display shows:

R: 7.20 pH
C: 7.00 pH **fig.6**

"R" means buffer solution reading value and "C" the calibration to refer to. During the calibration the "R" value could be different from the buffer solution value. Wait a stable reading in "R". Dip probe in a 7.00 pH buffer solution and use **"UP"** and **"DOWN"** keys to change the value in "C:" to have buffer solution value. Wait a stable reading in "R:" then press **"E"** key to confirm this first calibration. Pump will show:

R: 7.00 pH
C: 4.00 pH **fig.7**

Remove the probe from first buffer solution and repeat the cleaning procedure. Then dip probe into second buffer solution (for example 4.00 pH) and use **"UP"** and **"DOWN"** keys to change the value in "C:" to have buffer solution value. Wait a stable reading in "R:" then press **"E"** key to confirm. The pump will show the new values for a while and will return to main menu.

59mV / pH
- 000 mV **fig.8**

If calibration process fails the pump will show "PH CALIB FAILED". Not changing any value the program will return to "Calib" mode. To exit press "RIGHT" key twice.
DELAY

In main menu choose "PARAM" (fig.2) and press **"E"** key. Display shows:

11. Programming the pump

DEL.: —>00
0 0 0 0 **fig.9**

The -> arrow is on "DEL". This value is pump's waiting time after any start up procedure: pump will wait set time before start dosing every time it is powered on. Use **"UP"** and **"DOWN"** keys to change this value. Waiting time may be set from 1 to 60 minutes.

PASSWORD

In main menu choose "PARAM" (fig.2) and press **"E"** key. Display shows:
DEL.: —>00
0 0 0 0 **fig.9**

Press **"RIGHT"** key to move on 0 0 0 0. All new pumps have "0 0 0 0" as default password, use **"UP"** and **"DOWN"** keys to change this value. Press **"E"** to confirm new data. The pump shows the new password for about two seconds then it'll return to main menu. Press **"RIGHT"** key to leave main menu.

MAXIMUM TIME DOSING ALARM

This alarm prevents the pump to dose if a set time is reached. To set this alarm enter into "Setup menu" as shown in fig.3. Use "DOWN" key to choose "3) Alarm" and press "E" key. The pump shows:

-> AL OFF
DOSING **fig.10**

To activate the alarm use "UP" or "DOWN" keys to set the time (from 1 to 100 minutes or "AL OFF"). To setup the alarm mode use the "RIGHT" key. Cursor moves on "DOSING". Use "UP" or "DOWN" keys to change this voice. On "STOP" mode the pump will stop the dosing procedure once the set time is reached. The pump's display will show the alarm condition and requires to press a key to continue. On "DOSING" mode the pump will NOT stop the dosing procedure once the set time is reached. The pump's display will show the alarm condition and requires to press a key to continue.

Special functions

- Keep pressed the **"UP"** key to turn off the pump. Display shows "OFF" and it will switch off. Keeping pressed the **"UP"** key the pump will switch on.

- Keep pressed the **"DOWN"** key to read on display the power supply input.

- Keep pressed the **"E"** key for manual dosing.

- Pump's reset: turn off the pump, keep pressed **"UP"** and **"DOWN"** keys then turn on the pump. Release **"UP"** and **"DOWN"** keys and proceed to pump's set-up. This procedure will return the pump to its shipment condition.

12. Programming the pump KMS RH

PROGRAMMING "KMS RH" PUMP

Pump model (KMS "RH")

LCD Display

Stroke length adjustment knob

Navigational keys

Exit from program menu / Right Key

Program key

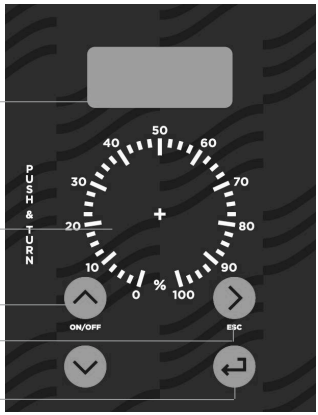

Note: it is possible to program the pump for dosing either oxidant or anti-oxidant, ensuring that o-rings match the additive chemical compatibility

Turn on the pump. Keep pressed **"E"** key for at least 4 seconds to enter in program mode. Pump's display shows:

PASSWORD :
—> 0000 **fig.1**

Use **"UP"** and **"DOWN"** keys to edit the password, press **"RIGHT"** to move on next digit.

"SETUP" program

Once entered the password, pump's display shows:

—>SETUP
PARAM **fig.2**

Move arrow on "SETUP" then press the **"E"** key:

"SET POINT" program

Setup
1) Point **fig.3**

Press **"E"**, the display will show:

a) ->100%
650mV **fig.4**

12. Programming the pump

The pump works at 100% of its capacity if ORP value is 650mV. Make sure that arrow is on "650mV" to change it and then use **"UP"** and **"DOWN"** keys to enter a new value. Use **"RIGHT"** key to move on next digit. Move arrow on 100% and change using the **"UP"** and **"DOWN"** keys.

b)->00%
700mV **fig.5**

The display shows that pump stops when ORP is 700mV. Make sure that arrow is on 700mV to change this value then use **"UP"** and **"DOWN"** keys to enter a new value. Use **"RIGHT"** key to move on next digit. Move arrow on 100% and change using the **"UP"** and **"DOWN"** keys. Press **"E"** key to confirm values and quit from programming mode. Display shows for a few seconds: DATA SAVED. Pump will change proportionally its dosing capacity between 650mV and 700mV. Now the pump will modify proportionally its own dosing capacity in range between 650mV and 700mV. In previous example pump will dose "chlorine".

Probe calibration

To obtain a reliable measurement it is necessary (during installation) calibrate the probe. To do this, a known buffer solutions is needed. Proceed as follows:
1) Measure buffer solution temperature and verify if it is the same printed on solution's label.
2) Insert probe's connector (blue color) into pump's input connector.
3) Remove protective cap from probe and wash it into water. Then dry it.
Into "Setup" menu (fig.3), choose "2)Calib" then press **"E"** key. The display shows:

R: 600 mV
C: 650 mV **fig,6**

"R" means buffer solution reading value and "C" the calibration to refer to. During the calibration the "R" value could be different from the buffer solution value. Wait a stable reading in "R". Dip probe in a 650mV buffer solution and use **"UP"** and **"DOWN"** keys to change the value in "C": to have buffer solution value. Wait a stable reading in "R:" then press **"E"** key to confirm. Display shows probe's data before to return at main menu. If calibration process fails the pump will show "MV CALIB FAILED". Not changing any value the program will return to "Calib" mode. To exit press "RIGHT" key twice.

DELAY

In main menu choose "PARAM" (fig.2) and press **"E"** key. Display shows:

DEL.: —>00
0 0 0 0 **fig.9**

The —> arrow is on "DEL". This value is pump's waiting time after any start up procedure: pump will wait set time before start dosing every time it is powered on. Use **"UP"** and **"DOWN"** keys to change this value. Waiting time may be set from 1 to 60 minutes.

PASSWORD

In main menu choose "PARAM" (fig.2) and press **"E"** key. Display shows:

12. Programming the pump

DEL.: —>00
0 0 0 0 **fig.9**

Press **"RIGHT"** key to move on 0 0 0 0. All new pumps have "0 0 0 0" as default password, use **"UP"** and **"DOWN"** keys to change this value. Press **"E"** to confirm new data and "RIGHT" to exit from programming mode.

MAXIMUM TIME DOSING ALARM

This alarm prevents the pump to dose if a set time is reached. To set this alarm enter into "Setup menu" as shown in fig.3. Use "DOWN" key to choose "3) Alarm" and press "E" key. The pump shows:

-> AL OFF
DOSING **fig.10**

To activate the alarm use "UP" or "DOWN" keys to set the time (from 1 to 100 minutes or "AL OFF"). To setup the alarm mode use the "RIGHT" key. Cursor moves on "DOSING". Use "UP" or "DOWN" keys to change this voice. On "STOP" mode the pump will stop the dosing procedure once the set time is reached. The pump's display will show the alarm condition and requires to press a key to continue. On "DOSING" mode the pump will NOT stop the dosing procedure once the set time is reached. The pump's display will show the alarm condition and requires to press a key to continue.

Special functions

- Keep pressed the **"UP"** key to turn off the pump. Display shows "OFF" and it will switch off. Keeping pressed the **"UP"** key, the pump will switch on.

- Keep pressed the **"DOWN"** key to read on display the power supply input.

- Keep pressed the **"E"** key for manual dosing.

- Pump's reset: turn off the pump, keep pressed **"UP"** and **"DOWN"** keys then turn on the pump. Release **"UP"** and **"DOWN"** keys and proceed to pump's set up. This procedure will return the pump to its shipment condition.

13. Programming the pump KMS CL

PROGRAMMING "KMS CL" PUMP

Pump model (KMS "CL")

LCD Display

Stroke lenght adjustment knob

Navigation keys

Exit from program menu / Manual mode function

Program key

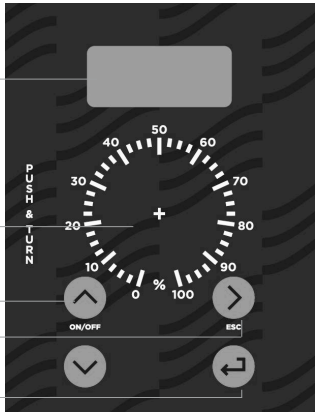

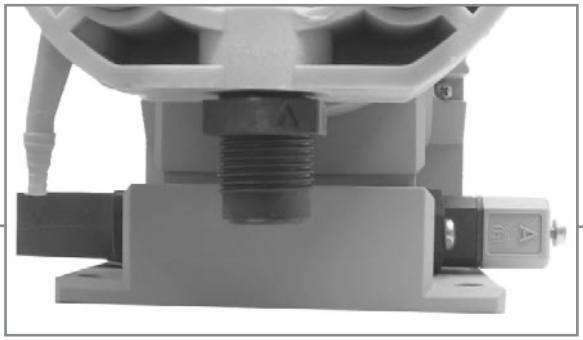

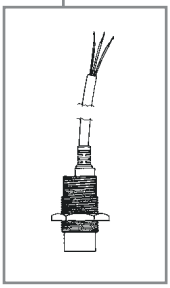

Connection for proximity probe mod. "SEPR".

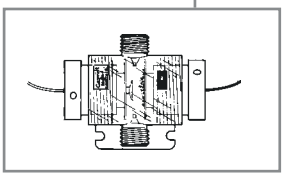

Connection for free chlorine cell.

13. Programming the pump

Connect the pump to the main power. If pump is switched on for the first time, the display will show:

-.-- Cl
Lowlev

If chlorine probe is connected, the pump will display the read value. **"Lowlev"** advice means pump is out of liquid or there is not water flow into probe holder. Verify that proximity probe led is "On" (there is flow) or "Off " (there is no flow).

HOW TO PROGRAM "KMS CL" ?

Keep pressed **"E"** key for about 4 seconds. The display shows:

PASSWORD
->0 0 0 0

This is the access code (password) for pump programming mode. Press "**RIGHT**" key to move on digits and use "**UP**" and "**DOWN**" keys to enter the right password. Default password is "0000". Press "**E**" key to confirm. If password is correct the display will show:

-> Setup
Param

If entered password is wrong, the display will show "Wrong Password" and will move back to main menu.

Use **"UP"** and **"DOWN"** keys to move cursor on functions. If it is the first time that you are using the pump, choose setup and press "**E**". The display shows:

Setup
1)Point

Press "**E**". The display shows:

-> 100%
0.50Cl

This is the pump first set point of read chlorine value. The pump works at 100% of its capacity. If chlorine will reach a value under 0.5 Cl, the pump will continue to work at 100%. Use "**UP**" and "**DOWN**" keys to modify the set point. Press "**RIGHT**" to move on next digit (100%).

Press "**RIGHT**" again to move on next set point:

-> 00%
1.00Cl

13. Programming the pump

This is the second set point of the pump. In this condition, the pump do not dose. If read chlorine will reach a value higher than 1.00 Cl, the pump will continue to not dose. Use **"UP"** and **"DOWN"** keys to modify the set point. Press **"RIGHT"** to move on next digit (0%).

The read values are referred to chlorine dosage into PROPORTIONAL mode. Invert percentage values for a dechlorine dosage.

The metering pump may also works into "On/Off" mode. To set it replace maximum and minimum percentage value of both set point with On/Off using **"UP"** and **"DOWN"** keys.

Press "E" to exit from "1)Point" menu. The pump will show a confirmation message "DATA SAVED".

HOW TO CALIBRATE "KMS CL" WITH ECL4/5/6 ?

- If the probe is equipped with an MPM connector, connect it to the pump. If the probe does not have MPM connector, use a screwdriver on grey plug from the pump (left side - connection for free chlorine cell). Remove plug blocker then connect RED or BROWN wire of amperometric cell to plug's terminal n.4. Connect BLUE or BLACK wire to terminal n.1.

- regulate the flow of amperometric cell and the PEF probe holder to about 48 liter per hour (max). Turn the stroke length adjustment knob until to match the upper part of floating with the graduated label.

- eliminate air bubbles in the amperometric cell because they can compromise the read value.

- let circulate the water of plant in the amperometric cell for about 30 minutes.

- close water flow to amperometric cell and wait few minutes. Select "Setup" from main menu, press **"E"**, select "2) Calib" and press **"E"**. The display shows:

-> ZERO
SLOPE

Leave the cursor on "ZERO" and press "E". The display shows:

R: -.-- Cl
C: 0.00 Cl

"R" is the read value, "C" is the referring value "0". During the calibration the "R" value could be different from the buffer solution value. Wait a stable reading in "R". Press **"E"** to confirm and exit from calibration menu. **Restore the water flow to the amperometric cell and wait few minutes.**

Check the free chlorine value in the water using a photometer instrument or by DPD1 system.

Select "Setup" from the main menu, press **"E"**, select "2)Calib" and press **"E"**. The display shows:

-> ZERO
SLOPE

Move the cursor on "SLOPE" and press "E". The display shows:

R: 0.80 Cl
C: 1.00 Cl

Use **"UP"** and **"DOWN"** keys to insert in set "C" the result of photometric analysis.
Press **"E"** to confirm, then press **"RIGHT"** until the display moves back to the main menu.

Repeat cell calibration during the firsts days or when needed (see the "HClO Dissociation Curve").

HClO Dissociation Curve

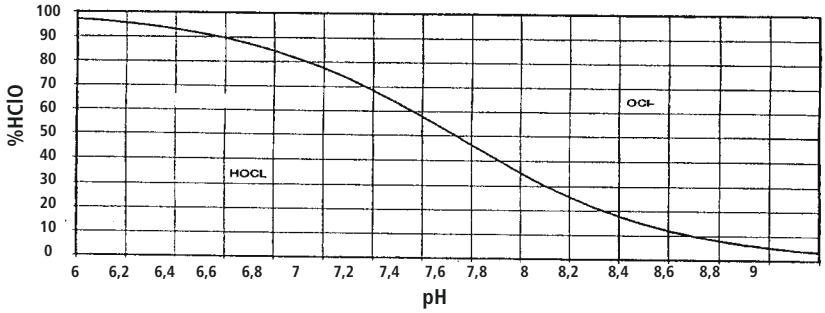

PARAM FUNCTION FOR DELAY

Keep pressed **"E"** key for about 4 seconds. The display shows:

PASSWORD
->0 0 0 0

This is the password for entering into pump program mode.
Press "**RIGHT**" key to move on digits and then use **"UP"** and **"DOWN"** keys to enter the correct password. The default password is "0000". Press "**E**" key to confirm. If the password is correct the display will show:

-> Setup
Param

If password is wrong, the display will show "Wrong Password" and it will go back to the main menu. Move the arrow on "Param" and press "**E**".

13. Programming the pump

The display shows:

DEL.: -> 00
  0 0 0 0

It is possible to set a delay during pump boot-up phase using **"UP"** and **"DOWN"** keys on "00" value. Minimum value: 0 minutes. Maximum value: 60 minutes.

Using the "**RIGHT**" key for moving on "0000". To insert a different password use **"UP"** and **"DOWN"** keys to modify the digits. Press "**E**" to confirm. For a few seconds the display will show the new password, then it will move back to the setup menu. Press "**RIGHT**" key to move back to the working mode.

Special functions

- Keep pressed the **"UP"** key to turn off the pump. Display shows "OFF" and it will switch off. Keeping pressed the **"UP"** key the pump will switch on.

- Keep pressed the **"DOWN"** key to read on display the power supply input.

- Keep pressed the **"RIGHT"** key for manual dosing. This function is not available if pump's display shows "Lowlev".

- Pump's reset: turn off the pump, keep pressed **"UP"** and **"DOWN"** keys then turn on the pump. Release **"UP"** and **"DOWN"** keys and proceed to pump's setup. This procedure will return the pump to its shipment condition.

MAXIMUM TIME DOSING ALARM

This alarm prevents the pump to dose if a set time is reached. To set this alarm enter into "Setup menu" as shown in fig.3. Use **"DOWN"** key to choose "3) Alarm" and press **"E"** key. The pump shows:

-> AL OFF
DOSING **fig.10**

To activate the alarm use **"UP"** or **"DOWN"** keys to set the time (from 1 to 100 minutes or "AL OFF"). To setup the alarm mode use the **"RIGHT"** key. Cursor moves on "DOSING". Use **"UP"** or **"DOWN"** keys to change this voice.
On "STOP" mode the pump will stop the dosing procedure once the set time is reached. The pump's display will show the alarm condition and requires to press a key to continue. On "DOSING" mode the pump will NOT stop the dosing procedure once the set time is reached. The pump's display will show the alarm condition and requires to press a key to continue.

13. Programming the pump

ECL1/X CELL CALIBRATION

Once pump is correctly installed, to calibrate ECL1/x amperometric chlorine cell, proceed as follow:

- unscrew bottom protection cap (do not touch or remove the membrane!)

- fill the membrane cap with electrolyte keeping electrode in vertical position then reassemble the cell avoiding that hands come in contact with metal parts. If electrolyte drips out when putting cap back, is not a problem.

- if cell is not connected: connect the cell using yellow wire on block n.1, brown wire on block n.2. white wire on block n.3, green wire on block n.4

- run water from system to be treated into Cell and PEF and regulate incoming flow rate to about 30 l/h: adjust flow rate by means of PEF flux meter screw until floater top reaches PEF indicated level.

- remove all air bubbles into the Cell to prevent reading error then let water flow into Cell ECL1/x for approximate 30 minute.

- enter into pump's programming mode and adjust the "Zero" using water without chlorine into amperometric cell.

- from pump's main menu select "Setup" from main menu, press **"E"**, select "2)Calib" and press **"E"**. The display shows:

-> ZERO
SLOPE

Leave the cursor on "ZERO" and press "ENTER". The display shows:

R: -.-- Cl
C: 0.00 Cl

"R" is the read value, "C" is the referring value "0". During the calibration the "R" value could be different from the buffer solution value. Wait a stable reading in "R". Press **"E"** to confirm and exit from calibration menu. **Restore the water flow to the amperometric cell and wait few minutes.**

Select "Setup" from the main menu, press **"E"**, select "2)Calib" and press **"E"**. The display shows:

-> ZERO
SLOPE

Move the cursor on "SLOPE" and press "E". The display shows:

R: 0.80 Cl
C: 1.00 Cl

Use "UP" and "DOWN" keys to insert in set "C" the result of photometric analysis.
Press **"E"** to confirm, then press **"RIGHT"** until the display moves back to the main menu.

Repeat cell calibration during the firsts days or when needed (see the "HClO Dissociation Curve").
Check the free chlorine value in the water using a photometer instrument or by DPD1 system.

ECL1/x CELL CLEANING AND MAINTENANCE

After a certain period of operation (6 months/1 year and according to the water quality parameters), or whenever calibration

is not longer possible, chlorine cell must be cleaned. To carry out electrodes cleaning refer to instructions enclosed with Cell. If cleaning operation was succesful, after approximate 24 hours measurement will stabilize, on the contrary change the electrodes.

WIRINGS CONNECTION

Pump can be connected to: ECL1 probe or ECL4/5/6, proximity sensor mod. "SEPR" and probe holder mod. "PEF1". Use provided connectors for using them.

ECL1
Yellow wire on block n.1, brown wire on block n.2. white wire on block n.3, green wire on block n.4.

ECL4/5/6
Yellow wire on block n.1 (-), green wire on block n.4 (+)

SEPR
Blue wire on block n.1, brown wire on block n.2, Black wire on block n.4.

If "SEPR" is not installed, the pump will not work. The user must connect block n.2 and n.4 together.

If "PEF1" and "SEPR" are not installed, reading accuracy is not guarantee.

14. Pump's messages

PUMP'S MESSAGES

During normal operating mode, the pump may show some messages.

Message: "LOW VOLT"
Description: The pump is low voltage powered. Check main power.

Message: "HIGH VOL"
Description: The pump is high voltage powered. Check main power.

Message: "LOW LEVEL"
Description: Product to dose is near to end. Verify the tank.

Message: "STAND-BY"
Description: The pump is waiting (a specified time) to become operative.

Message: "DOSING" or "AL OFF"
Description: The pump is on "max dosing time alarm". See related chapter to set this function.

Message: "DATA SAVED"
Description: Data have been saved succesfully.

Message: "OFFSET CL ERROR" or "SLOPE CL ERROR" (only for mod. KMS CL)
Description: Calibration error. Repeat the procedure following the instruction.

15. Troubleshooting

Problem	Possible Cause
Pump doesn't turn on.	Pump isn't powered. Connect it to main supply. Pump's protection fuse is broken. Replace it. See page 36 for replacement procedure. Pump's main board is broken. Replace it. See page 36 for replacement procedure.
Pump is not dosing and solenoid is operating.	The foot filter is obstructed. Clean it. Suction hose is empty. Pump must be primed. Repeat priming procedure. Air bubbles inside hydraulic circuit. Check valves - hoses - fittings. Product to dose is generating gas. Turn discharge knob and let air flow away. Use a self-venting pump head.
Pump is not dosing and solenoid isn't operating or slightly operating.	Crystals presence inside valves. Check them and try to dose 2-3 liters of normal water. Change valves. Injection valve obstructed. Change it.

16. Fuse and main board replacement

Fuse or main board replacement is allowed to qualified personnel only. Before to operate disconnect the pump from main power and all hydraulic connections.

For fuse replacement is necessary to use a 3x16 and 3x15 screwdriver and a new fuse (same model of old one).

For main board replacement is necessary to use a 3x16 and 3x15 screwdriver and a new main board (same model of old one).

Fuse replacement procedure:

- Turn pump's injection knob on 0%.
- Remove 6 screws from pump's back.
- Pull pump's back cover until it's completed separated from pump's front. Be careful of the knob's spring.
- Locate the blown fuse and replace it.
- Reassemble the pump. Be careful to put back the knob's spring.
- Reinsert screws.

Main board replacement procedure:

- Turn pump's injection knob on 0%.
- Remove 6 screws from pump's back.
- Pull pump's back cover until it's completed separated from pump's front. Be careful of the knob's spring.
- Remove board's screws.
- Completely disconnect wires from main board and replace it. Reinsert screws.
- Reconnect wires to the main board (see enclosed picture).
- Reassemble the pump. Be careful to put back the knob's spring.
- Reinsert screws.

17. Main Board

KMS EN

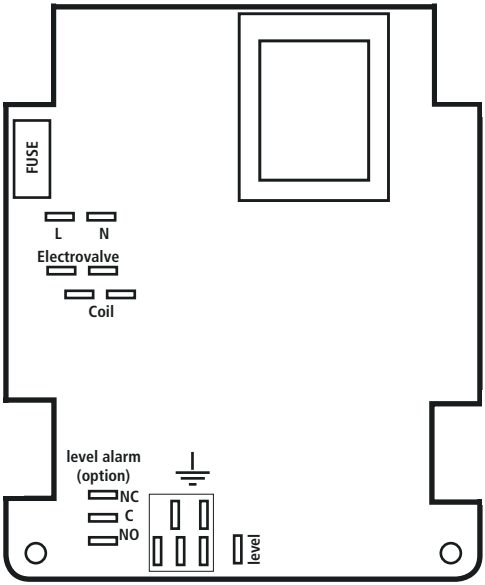

KMS-CL

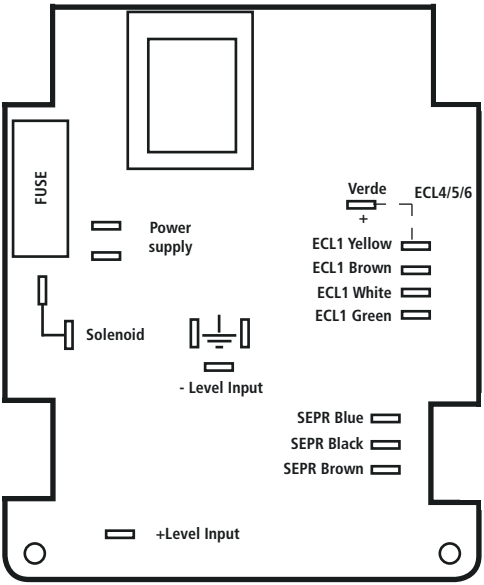

17. Main Board

KMS pH / Rh

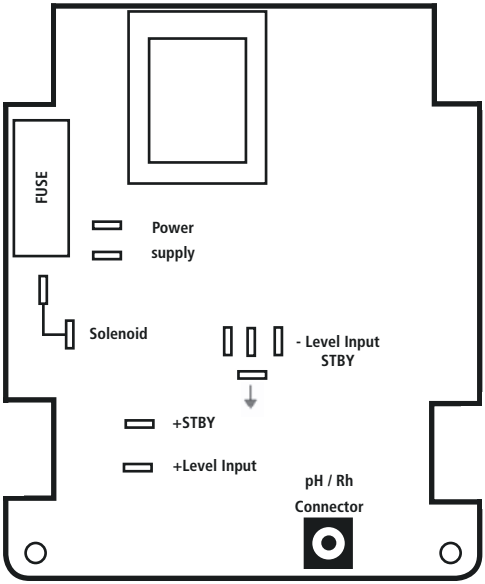

A Appendix. Maintenance.

Maintenance schedule

In order to ensure the requirements of potable drinking water treated and the maintenance of the improvements as declared by the manufacturer, this equipment must be checked at least once a month.

OPERATOR PROTECTION
Use safety equipment according to the company regulations.
Use this safety equipment within the work area during installation, service and when handling chemicals:

- **protective mask**
- **protective gloves**
- **safety goggles**
- **ear plugs or hear muffs**
- **further security device, if necessary.**

POWER SUPPLY DISCONNECTION
Always disconnect power to the motor before you perform any installation or maintenance tasks. Failure to disconnect power will result in serious physical injury.

Installation and maintenance tasks should be carried out by AUTHORIZED AND QUALIFIED PERSONNEL only in accordance with local regulations.

Use original spare parts.

Maintenance inspection

Shutdown the dosing pump before any maintenance operation **Shutdown procedure.**

A maintenance schedule includes these types of inspections:

- Routine maintenance and inspections
- Three-month inspections
- Annual inspections

Shorten the inspection intervals appropriately if the pumped chemical is abrasive or corrosive.

Routine maitenance and inspections
Perform these tasks whenever you perform routine maintenance:

- Inspect the seal. Ensure that there are no leaks from the mechanical seal.
- Check electrical wiring
- Check for unusual noise and vibration (noise allowed 74 dbA; ± 5 dB).
- Check the pump and piping for leaks.
- Check for corrosion on parts of the pump and / or on hoses.

Three-month inspections
Perform these tasks every three months:

- Check that the tightenings.
- Check the mechanical seal if the pump has been left idle.

Annual inspections
Perform these inspections one time each year:

- Check the pump capacity (as per nameplate).
- Check the pump pressure (as per nameplate).
- Check the pump power (as per nameplate).

f the pump performance does not satisfy your process requirements, and the process requirements have not changed, then perform these steps:
1. Disassemble the pump.
2. Inspect it.
3. Replace worn parts.

Shutdown procedure

This procedure SHOULD BE CARRIED OUT BY AUTHORIZED AND QUALIFIED PERSONNEL

OPERATOR PROTECTION
Use safety equipment according to the company regulations.
Use this safety equipment within the work area during installation, service and when handling chemicals:
- **protective mask**
- **protective gloves**
- **safety goggles**
- **ear plugs or hear muffs**
- **further security device, if necessary.**

Shutdown the dosing pump before any maintenance operation or before long downtimes.
Disconnect power and ensure it cannot be restarted.

Depressurize the system. The liquid may leak splashing.

Drain the chemical from pump head.
Release the pressure and disconnect the disharge pipe from the discharge valve.
Rinse the pump head and clean all valves.

B Appendix. Construction Materials and Technical info

TECHNICAL FEATURES

Power supply:	230 VAC (190-265 VAC) - 50/60 Hz
Power supply:	115 VAC (90-135 VAC) - 50/60 Hz
Power supply:	24 VAC (20-32 VAC) - 50/60 Hz
Power supply:	12 VDC (10-16 VDC)
Suction Height:	1,5 metres
Environment Temperature:	0-45°C (32-113°F)
Chemical Temperature:	0-50°C (32 -122°F)
Installation Class:	II
Pollution Level:	2
Audible Noise:	74dbA
Packaging and Transporting Temperature:	-10-50°C (14-122°F)
Protection degree:	IP 65

UR working % : 85% with t ≤40 °C; 70% at 50 °C (non condensing).

MANUFACTURING MATERIALS

Case:	PP
Pump head:	PVDF, Acrilic, SS *
Diaphragm:	PTFE
Balls:	CERAMIC, PTFE, SS *
Suction Pipe	PVC
Delivery Pipe:	PVDF
Valve Body:	PVDF, PE, SS *
O-ring:	FP, EP, PTFE *
Injection connector	PVDF (ceramic, HASTELLOY C276 spring)
Level Probe:	PVDF
Level probe cable:	PE
Foot Filter:	PVDF

***as ordered.**

TECHNICAL INFORMATION											
KMS	CAPACITY				cc / stroke		Max pressure		imp/min	Hoses	Pump head
	min cc/h	max l/h	Min GPH	Max GPH	min	max	bar	PSI			
1802	0,06	2	0,000016	0,53	0,06	0,19	18	261	180	4 x 6	L
1504	0,11	4	0,000029	1,06	0,11	0,37	15	217	180	4 x 6	L
1005	0,14	5	0,000037	1,32	0,14	0,46	10	145	180	4 x 6	L
0808	0,22	8	0,000058	2,11	0,22	0,74	8	116	180	4 x 6	L
0510	0,28	10	0,000074	2,64	0,28	0,93	5	72	180	4 x 6	L
0501	0,03	1	0,000008	0,26	0,03	0,09	5	72	180	4 x 6	I
0218	0,50	18	0,00013	4,76	0,50	1,67	2	29	180	6 x 8	M

TECHNICAL INFORMATION											
KMSA	CAPACITY				cc / stroke		Max pressure		imp/min	Hoses	Pump head
	min cc/h	max l/h	Min GPH	Max GPH	min	max	bar	PSI			
1801	0,03	1	0,000008	0,26	0,03	0,09	18	261	180	4 x 6	LA
1503	0,08	3	0,000021	0,79	0,08	0,28	15	217	180	4 x 6	LA
103.5	0,10	3,5	0,000026	0,92	0,10	0,32	10	145	180	4 x 6	LA
085.5	0,15	5,5	0,000040	1,45	0,15	0,51	8	116	180	4 x 6	LA
057.5	0,21	7,5	0,000055	1,98	0,21	0,69	5	72	180	4 x 6	LA
0213	0,37	13	0,000098	3,43	0,37	1,20	2	29	180	6 x 8	MA

C Appendix. Delivery Curves

Flow rate indicated is for H_2O at 20°C at the rated pressure. Dosing accuracy ± 2% at constant pressure ± 0,5 bar.

1802: l/h 2 bar 18
Pump head mod. L

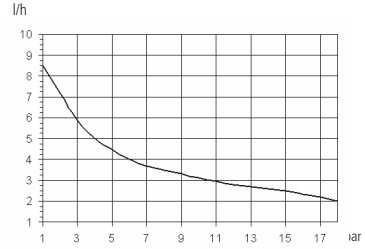

1504: l/h 4 bar 15
Pump head mod. L

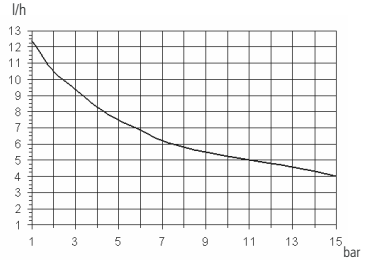

1005: l/h 5 bar 10
Pump head mod. L

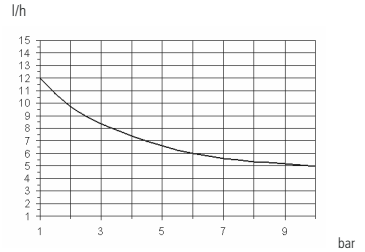

0808: l/h 8 bar 8
Pump head mod. L

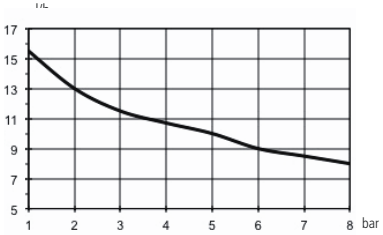

0510: l/h 10 bar 5
Pump head mod. L

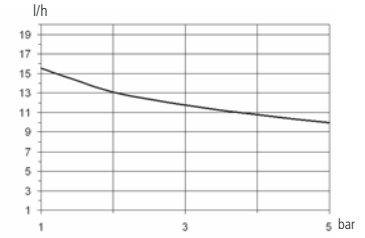

0218: l/h 18 bar 2
Pump head mod. M

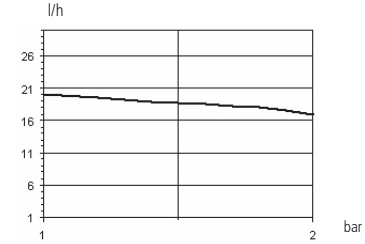

0501: l/h 1 bar 5
Pump head mod. I

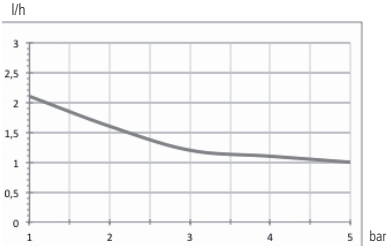

2001: 01 l/h bar 20
Pump head mod. I

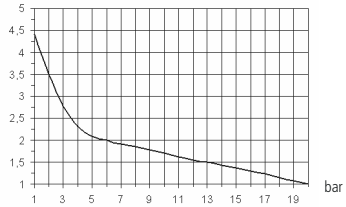

C Appendix. Delivery Curves for self-venting pump head

Flow rate indicated is for H_2O at 20°C at the rated pressure. Dosing accuracy ± 2% at constant pressure ± 0,5 bar.

1801: l/h 1 bar 18
Pump head mod. LA

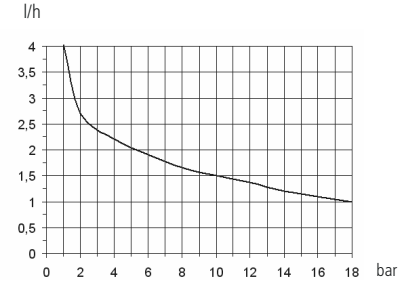

1503: l/h 3 bar 15
Pump head mod. LA

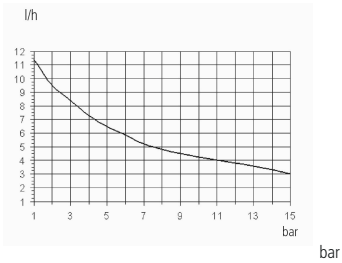

103,5: l/h 3,5 bar 10
Pump head mod. LA

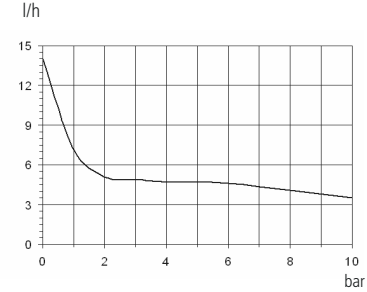

085,5: l/h 5,5 bar 8
Pump head mod. LA

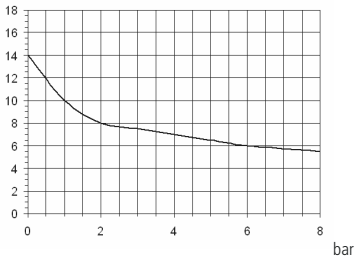

057,5,5: l/h 7,5 bar 5
Pump head mod. LA

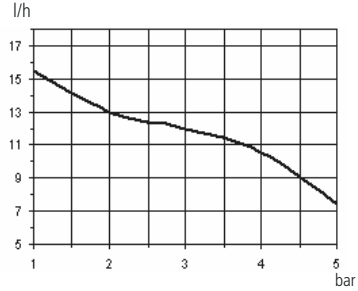

0213: l/h 13 bar 2
Pump head mod. MA

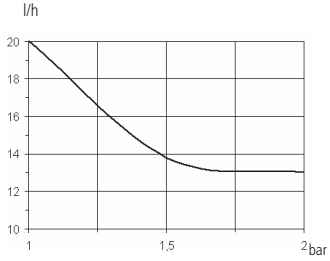

bold : mm
( ) : inches

Dimensions

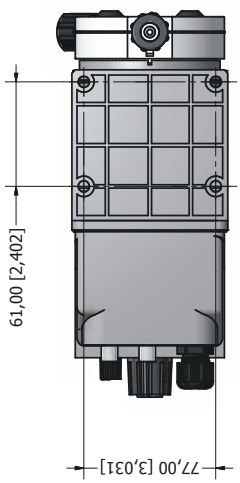

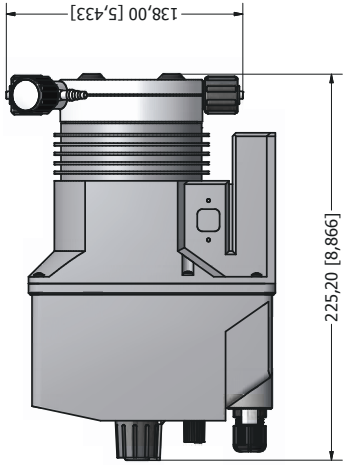

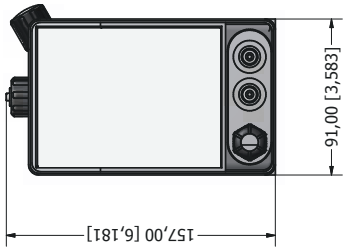

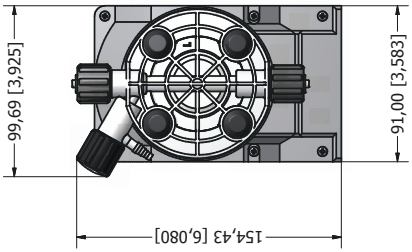

E Appendix. Chemical Compatibility Table

Solenoid driven metering pumps are widely used to dose chemical fluids and it is important that the most suitable material in contact with fluid is selected for each application. This compatibility table serves as a useful help in this respect. All the informations in this list are verified periodically and believed to be correct on the date of issuance. All the informations in this list are based on manufacturer's data and its own experience but since the resistance of any material depends by several factors this list is supplied only as an initial guide, in no way manufacturer makes warranties of any matter respect to the informations provided in this list.

Product	Formula	Ceram.	PVDF	PP	PVC	SS 316	PMMA	Hastel.	PTFE	FPM	EPDM	NBR	PE
Acetic Acid, Max 75%	CH3COOH	2	1	1	1	1	3	1	1	3	1	3	1
Hydrochloric Acid, Concentrate	HCl	1	1	1	1	3	1	1	1	1	3	3	1
Hydrofluoric Acid 40%	H2F2	3	1	3	2	3	3	2	1	1	3	3	1
Phosphoric Acid, 50%	H3PO4	1	1	1	1	2	1	1	1	1	1	3	1
Nitric Acid, 65%	HNO3	1	1	2	3	2	3	1	1	1	3	3	2
Sulphuric Acid, 85%	H2SO4	1	1	1	1	2	3	1	1	1	3	3	1
Sulphuric Acid, 98.5%	H2SO4	1	1	3	3	3	3	1	1	1	3	3	3
Amines	R-NH2	1	2	1	3	1	-	1	1	3	3	1	1
Sodium Bisulphite	NaHSO3	1	1	1	1	2	1	1	1	1	1	1	1
Sodium Carbonate (Soda)	Na2CO3	2	3	1	1	1	1	1	1	2	1	1	1
Ferric Chloride	FeCl3	1	1	1	1	3	1	1	1	1	1	1	1
Calcium Hydroxide (Slaked Lime)	Ca(OH)2	1	1	1	1	1	1	1	1	1	1	1	1
Sodium Hydroxide (Caustic Soda)	NaOH	2	1	1	1	1	1	1	1	2	1	2	1
Calcium Hypochlor.(Chlor.ted Lime) [1]	Ca(OCl)2	1	1	1	1	3	1	1	1	1	1	3	1
Sodium Hypochlorite, 12.5%	NaOCl + NaCl	1	1	2	1	3	1	1	1	1	1	2	3
Potassium Permanganate, 10%	KMnO4	1	1	1	1	1	1	1	1	1	1	3	1
Hydrogen Peroxide, 30% (Perydrol)	H2O2	1	1	1	1	1	3	1	1	1	3	3	1
Aluminium Sulphate	Al2(SO4)3	1	1	1	1	1	1	1	1	1	1	1	1
Copper-II-Sulphate (Roman Vitriol)	CuSO4	1	1	1	1	1	1	1	1	1	1	1	1

[1] Calcium Hypochlor.(Chlor.ted Lime): WQA test was based on 1% Calcium Hypochlorite solution.

Resistance rating

Resistant	1
Fairly resistant	2
Not resistant	3

MATERIALS

Polyvinyldene fluoride	PVDF	Pump Heads, valves, fitting, tubing
Polypropylene	PP	Pump Heads, valves, fitting, level floater
PVC	PVC	Pump Heads
Stainless steel	SS 316	Pump Heads, valves
Polymethyl Metacr.(Acrylic)	PMMA	Pump Heads
Hastelloy	C-276	Injection valve spring
Polytetrafluoroethylene	PTFE	Diaphragm
Fluorocarbon (Viton® B)	FPM	Sealings
Ethylene propylene	EPDM	Sealings
Nitrile	NBR	Sealings
Polyethylene	PE	Tubing

F Appendix. Hoses resistance table

Hose features are very important for a reliable dosage. Every pump's model is made to work in the best way using selected hoses according to pump's capacity / model. Information reported here are intended for standard use only. For extended information ask to hose's manufacturer.

Suction / Delivery Hose			
4x6 mm PVC (transparent)	4x8 mm PE (opaque)	6x8 mm PE (opaque)	8x12 mm PVC (transparent)

Delivery Hose	Working Pressure				Breaking Pressure			
4x6 mm PE 230 (opaque)	20°C 12 bar	30°C 10.5 bar	40°C 8.5 bar	50°C 6.2 bar	20°C 36 bar	30°C 31.5 bar	40°C 25.5 bar	50°C 18.5 bar
4x8 mm PE 230 (opaque)	20°C 19 bar	30°C 15.7 bar	40°C 12 bar	50°C 7.5 bar	20°C 57 bar	30°C 47 bar	40°C 36 bar	50°C 22.5 bar
6x8 mm PE 230 (opaque)	20°C 8.6 bar	30°C 6.8 bar	40°C 4.8 bar	50°C 2.3 bar	20°C 26 bar	30°C 20.5 bar	40°C 14.5 bar	50°C 7 bar
8x12 mm PE 230 (opaque)	20°C 12 bar	30°C 10.5 bar	40°C 8.5 bar	50°C 6.2 bar	20°C 36 bar	30°C 31.5 bar	40°C 25.5 bar	50°C 18.5 bar

4x6 mm PVDF Flex 2800 (opaque)	20°C 40 bar	30°C 34 bar	40°C 30 bar	50°C 27 bar	60°C 24.8 bar	80°C 20 bar	90°C 10 bar
6x8 mm PVDF Flex 2800 (opaque)	20°C 29 bar	30°C 25.5 bar	40°C 22 bar	50°C 20 bar	60°C 18 bar	80°C 14.5 bar	90°C 7.3 bar
8X10 mm PVDF Flex 2800 (opaque)	20°C 18 bar	30°C 15.5 bar	40°C 13.5 bar	50°C 12.5 bar	60°C 11.2 bar	80°C 9 bar	90°C 4.5 bar

¼ PE 230 (opaque)	20°C 17.6 bar
⅜ PE 230 (opaque)	20°C 10.6 bar
½ PE 230 (opaque)	20°C 10.6 bar

G Appendix. Installation draw for “KMS PH/RH” metering pumps

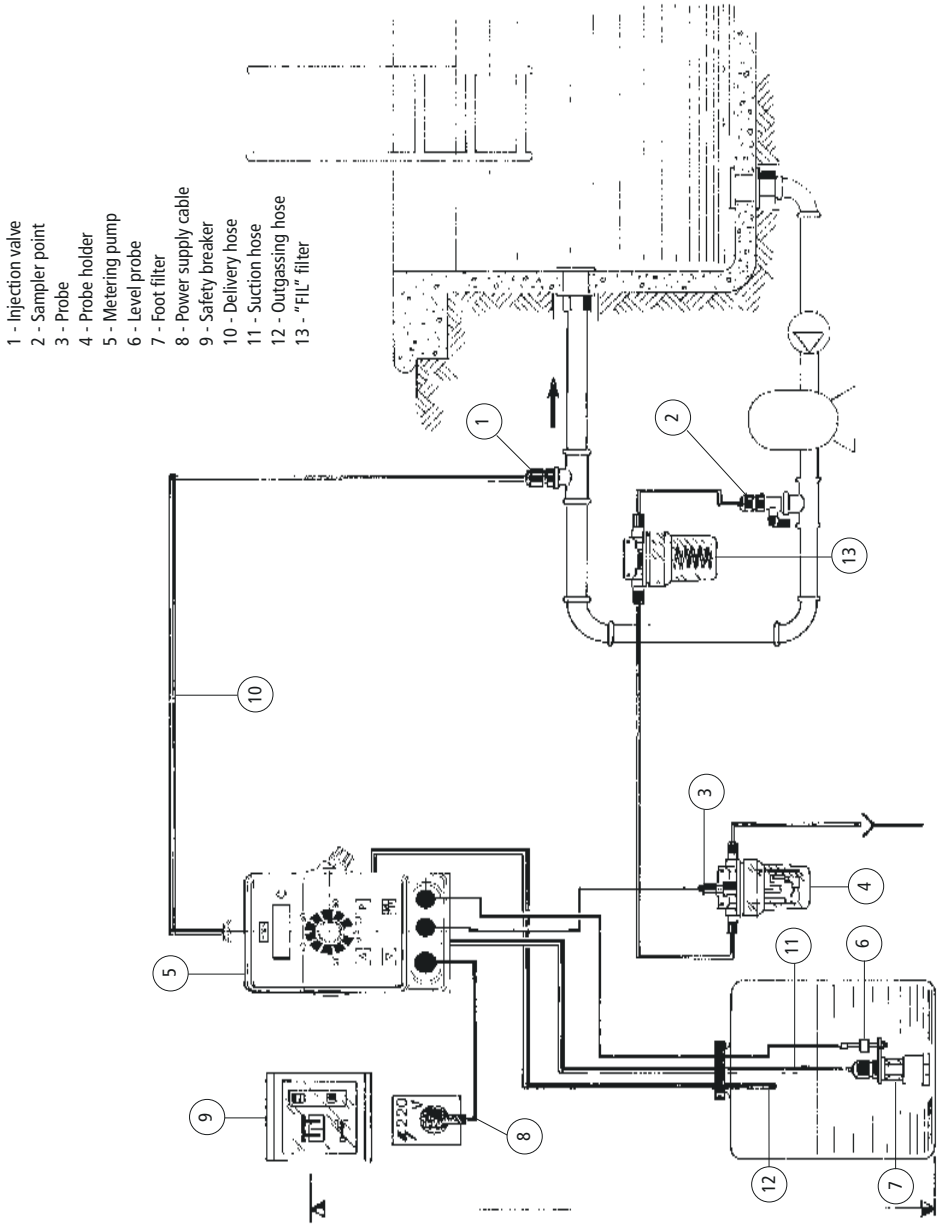

G Appendix. Installation draw for “KMS EN” metering pumps

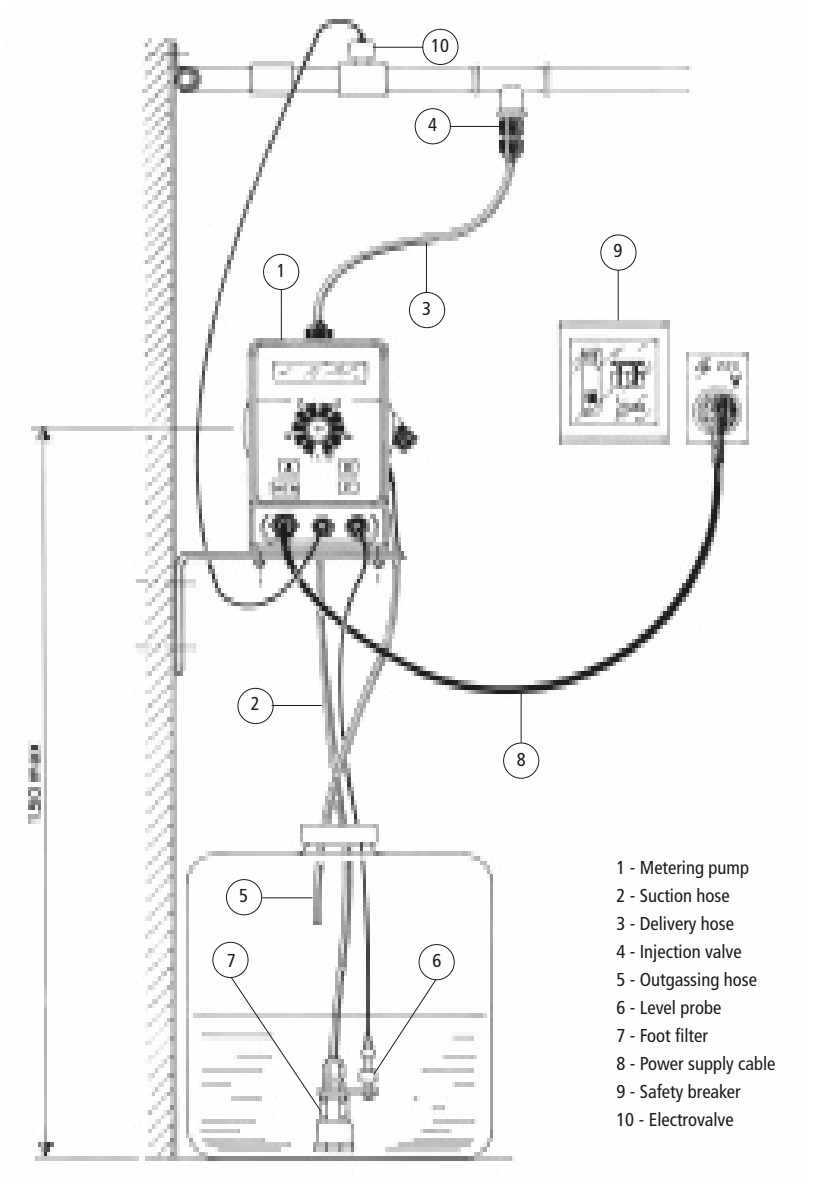

H Appendix. Exploded view

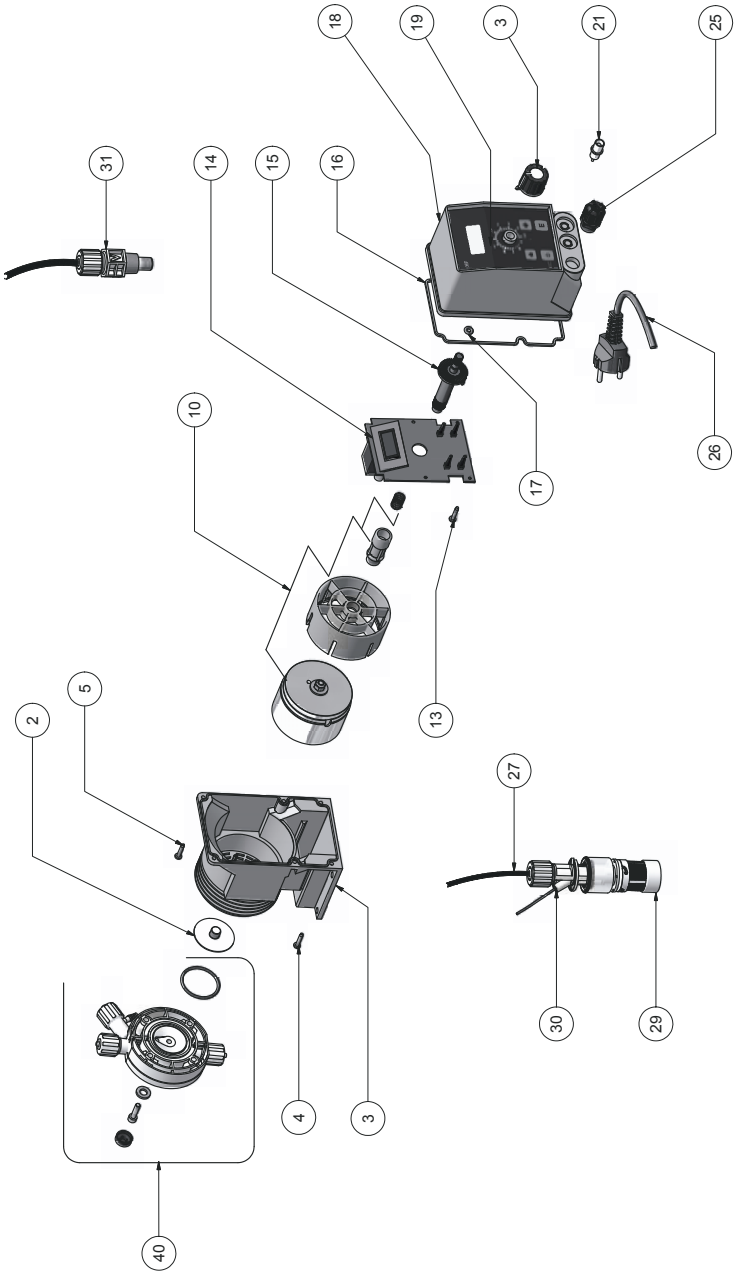

NOTICE: always specify the pump's label when ordering spare parts.

PRODUCT SERVICE REPAIR FORM

ENCLOSE THE PRESENT FORM TO THE DELIVERY NOTE

DATE .....

SENDER

Company name.....

Address .....

Phone no. .....

Contact person.....

PRODUCT TYPE (see product label)

DEVICE CODE .....

S/N (serial number).....

OPERATING CONDITIONS

Location/installation description .....

.....

Chemical .....

Start-up (date) ..... Running time (approx. hours).....

REMOVE ALL THE LIQUID INTO THE PUMP HEAD AND DRY IT BEFORE PACKAGING IN ITS ORIGINAL BOX.

DESCRIPTION OF PROBLEM

☐ MECHANICAL

- Wear parts.....
- Brekage/other damages .....
- Corrosion.....
- Other.....

☐ ELECTRICAL

- Connections, connector, cables .....
- Operating controls (keyboard, display, etc.) .....
- Elettronics.....
- Other.....

☐ LEAKS

- Connections.....
- Pump head .....

☐ NOT OR INADEQUATE FUNCTION/OTHER

.....

.....

.....

I declare that the dosing pump is free of any hazardous chemical.

Signature of the compiler

Company stamp

Index

1. Introduction 3
2. Unpacking 4
3. Pump's description 5
4. Before to Install warnings 6
5. Installation Draw 7
6. Hydraulic Installation 8
7. Electrical Installation 12
8. Priming 14
9. Programming the pump 15
10. Programming the pump KMS EN 16
11. Programming the pump KMS PH 21
12. Programming the pump KMS RH 24
13. Programming the pump KMS CL 27
14. Pump's messages 34
15. Troubleshooting 35
16. Fuse and main board replacement 36
17. Main Board 37
A Appendix. Maintenance. 39
B Appendix. Construction Materials and Technical info 40
C Appendix. Delivery Curves 41
C Appendix. Delivery Curves for self-purge pump head 42
D Appendix. Dimensions 43
E Appendix. Chemical Compatibility Table 44
F Appendix. Hoses resistance table 45
G Appendix. Installation draw for "KMS PH/RH" metering pumps 46
G Appendix. Installation draw for "KMS EN" metering pumps 47
H Appendix. Exploded view 48

PRECAUTIONS RELATING TO DIRECTIVES, REGULATIONS AND STANDARDS

§ CE/EU and UKCA marking

We guarantee that this product meets the essential requirements of the applicable Directives and Regulations based on the following specifications. Please carefully consider the following specifications for use of the product in European Union member countries and the United Kingdom.

• CE/EU harmonized directives and standards

Directives
DIRECTIVE 2006/42/EC
DIRECTIVE 2014/35/EU
DIRECTIVE 2014/30/EU
DIRECTIVE 2011/65/EU
DELEGATED DIRECTIVE (EU) 2015/863

Harmonized standards
EN ISO 12100
EN 809
EN ISO 20361
EN IEC 61326-1
EN 61010-1
EN IEC 63000

• UKCA harmonized regulations and standards

Regulations
2008 No. 1597
2008 2016 No. 1091
2016 No. 1101
2012 No. 3032

Harmonized standards
BS EN ISO 12100
BS EN 809
BS EN ISO 20361
BS EN IEC 61326-1
BS EN 61010-1
BS EN IEC 63000

Disposal of end-of-life equipment by users

This symbol warns you not to dispose of the product with normal waste. Respect human health and the environment by giving the discarded equipment to a designated collection center for the recycling of electronic and electrical equipment. For more information visit the online site.

When dismantling a pump please separate material types and send them according to local recycling disposal requirements. We appreciate your efforts in supporting your local Recycle Environmental Program. Working together we'll form an active union to assure the world's invaluable resources are conserved.