R990525

V - VA

PRODUCT LABEL

V

VA

SOLENOID DRIVEN METERING PUMPS
WITH DIAPHRAGM

EN

OPERATING MANUAL

This operating instructions contains safety information that if ignored can endanger life or result in serious injury.

Read these instructions **carefully** before use and keep them for future reference. The original instruction is in Italian. All non-Italian instructions are translations of the original instruction.

Information and specifications on this manual could be uncorrect or could have printing errors. Specifications are subject to change without notice.

Version: R3-11-21

Product Description
Descrizione Prodotto

Electromagnetic dosing pump, V and VMS series
Pompa dosatrice elettromagnetiche, serie V e VMS

Product Identification Codes
(the "_" symbols complete the product code based on the configuration of the variants)
Codici Identificativi Prodotto
(i simboli "_" completano il codice del prodotto in base alla configurazione delle varianti)

VAF _____	VHD _____	VLP _____
VAG _____	VHE _____	VLR _____
VAL _____	VPV _____	VLS _____
VAM _____	VRE _____	VMF _____
VAN _____	VPX _____	VML _____
VAO _____	VRH _____	VMP _____
VAP _____	VSA _____	VMS _____
VAR _____	VSC _____	VMV _____
VAS _____	VSE _____	VNP _____
VAU _____	VSL _____	VNS _____
VAV _____	VSN _____	VNT _____
VBA _____	VSO _____	VOG _____
VCD _____	VSP _____	VOH _____
VCL _____	VSR _____	VOP _____
VCO _____	VSS _____	VOS _____
VDA _____	VUA _____	VP2 _____
VDC _____	VUG _____	VPA _____
VDD _____	VUL _____	VPB _____
VDS _____	VUM _____	VPH _____
VEH _____	VUS _____	VPM _____
VEN _____	VIP _____	VPN _____
VER _____	VIS _____	VPO _____
VES _____	VLD _____	VPP _____
VFM _____	VLE _____	VPS _____
VFS _____	VLG _____	

GENERAL SAFETY GUIDELINES

Operating, installing, or maintaining the unit in any way that is not covered in this manual could cause death, serious personal injury, or damage to the equipment.

ICON

This manual use the following safety message icon:

Danger!
Indicates a hazardous situation which, if not avoided, will result in death or serious injury.

Warning!
Indicates a hazardous situation which, if not avoided, could result in death or serious injury.

Important - A practice not related to personal injury or additional information.

Cross reference - An instance which refers to related information elsewhere in the same document

PURPOSE OF USE AND SAFETY

METERING PUMP IS INTENDED FOR CHEMICAL DOSING AND DRINKING WATER TREATMENT.

Do not use in explosive area (EX).
Do not use with flammable chemicals.
Do not use with radioactive chemicals.

Use after a proper installation.

Use the pump in accordance with the data and specifications printed on the label.

Do not modify or use in a manner inconsistent with the provisions of the operating manual.

Keep the pump protected from sun and water. Avoid water splashes.

In emergencies the pump should be switched off immediately. Disconnect the power cable from the power supply.

When using pump with aggressive chemicals observe the regulations concerning the transport and storage of aggressive fluids.

When installing always observe national regulations.

Manufacturer is not liable for any unauthorized use or misuse of this product that may cause injury, damage to persons or materials.

Pump must be accessible at all times for both operating and servicing. Access must not be obstructed in any way.

Feeder should be interlocked with a no-flow protection device.

Pump and accessories must be serviced and repaired by qualified and authorized personnel only.

Before any operation:
- **always read chemical Material Safety Data Sheet (MSDS);**
- **always wear protective clothing;**
- **always discharge the liquid end before servicing the pump.**
- **empty and rinse the liquid end before work on a pump which has been used with hazardous or unknown chemicals.**

This equipment requires regular maintenance to ensure potability requirements of the water and maintenance of improvements as declared by the manufaturer.

ENVIRONMENTAL SAFETY

Work area
Always keep the pump area clean to avoid and/or discover emissions.

Recycling guidelines

EWC code: 16 02 14

Always recycle according to these guidelines:
1. If the unit or parts are accepted by an authorized recycling company, then follow local recycling laws and regulations.
2. If the unit or parts are not accepted by an authorized recycling company, then return them to the nearest representative.

Waste and emissions regulations
Observe these safety regulations regarding waste and emissions:
- Dispose appropriately of all waste.
- Handle and dispose of the dosed chemical in compliance with applicable environmental regulations.
- Clean up all spills in accordance with safety and environmental procedures.
- Report all environmental emissions to the appropriate authorities.

LABELS

Fig. 1. Product label.

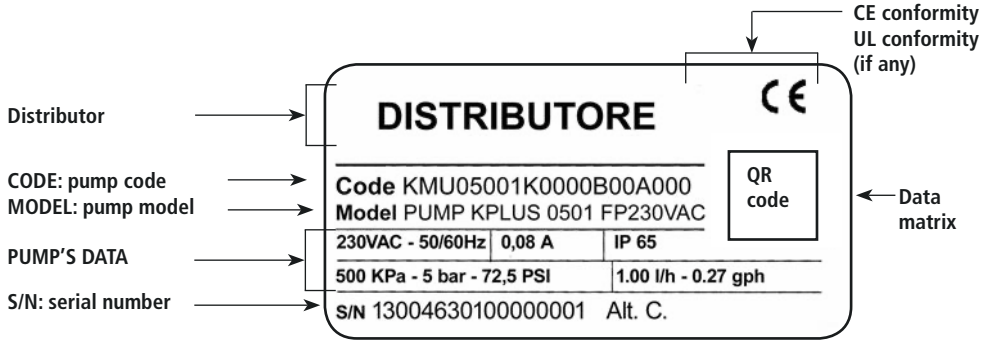

Spare parts

For spare parts orders or any other communication, refer to product label.
Code (CODE) and serial number (S / N) uniquely identify the pump.

Introduction:

"V" Series metering pumps are the ideal solution for low / middle dosing of chemicals. All control and setup parameters are available using accurate control knobs and a visual system (led). "V" Series metering pumps have digital On/Off switch to ensure dosing activities (available on some models only).

V	constant metering pumps with manual venting PVDF pump head
VA	constant metering pumps with self venting PVDF pump head

Pump capacity:

Flow rate is determined by the stroke speed (frequency) adjustment. The stroke speed is adjustable from 0 to 100% using the adjustment knob.
However dosing accuracy is guarantee within an adjustment range from 30% to 100%. The led on the panel shows the status activity of the pump.

Models

Series	Mod.	Description
V - VA	CO	Constant pump with stroke speed (frequency) adjustment and a divider mode to reduce by 10 times the pump capacity.
	CL	Constant pump with level control, stroke speed (frequency) adjustment and a divider mode to reduce by 10 times the pump capacity.
	COG	Constant pump with stroke speed (frequency) adjustment and a divider mode to reduce by 10 times the pump capacity. Double measurement scale (24h): 0-300 gr/day or 0-3000 gr/day.
	CLG	Constant pump with level control, stroke speed (frequency) adjustment and a divider mode to reduce by 10 times the pump capacity. Double measurement scale (24h): 0-300 gr/day or 0-3000 gr/day.
	IS	Proportional/constant pump driven by a digital signal.

Legend

a. **Alternating Current;** ~

b. **DC,** ⎓

c. **Protective Earth;** ⏚

d. **Standby;** ⏻

e. **Warning -** ⚠

2. Unpacking

Included into package:

n.4	Dibbles ø6
n.4	Self tapping screws 4,5 x 40
n.1	Delayed fuse 5 X 20
n.1	Foot filter with valve
n.1	Injection valve
n. 1	Level probe (not included in VCO model)
m 2	Delivery pipe* (opaque PE)
m 2	Suction pipe * (transparent PVC)
m 2	Discharge pipe (transparent PVC 4x6)
n.1	This installation manual
*	If hose is 6x8 then there is only a 4mt long hose. Cut to obtain suction and delivery hoses.

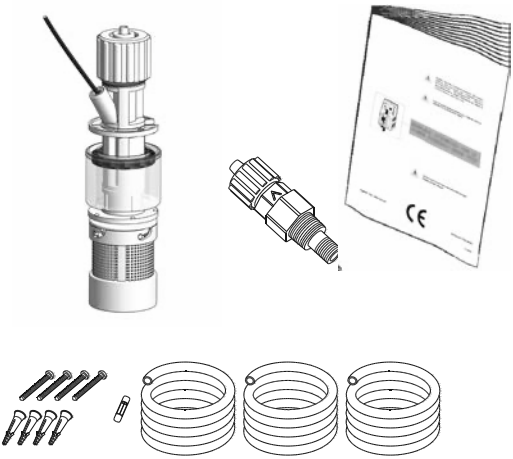

PLEASE DO NOT TRASH PACKAGING.
IT CAN BE USED TO RETURN THE PUMP.

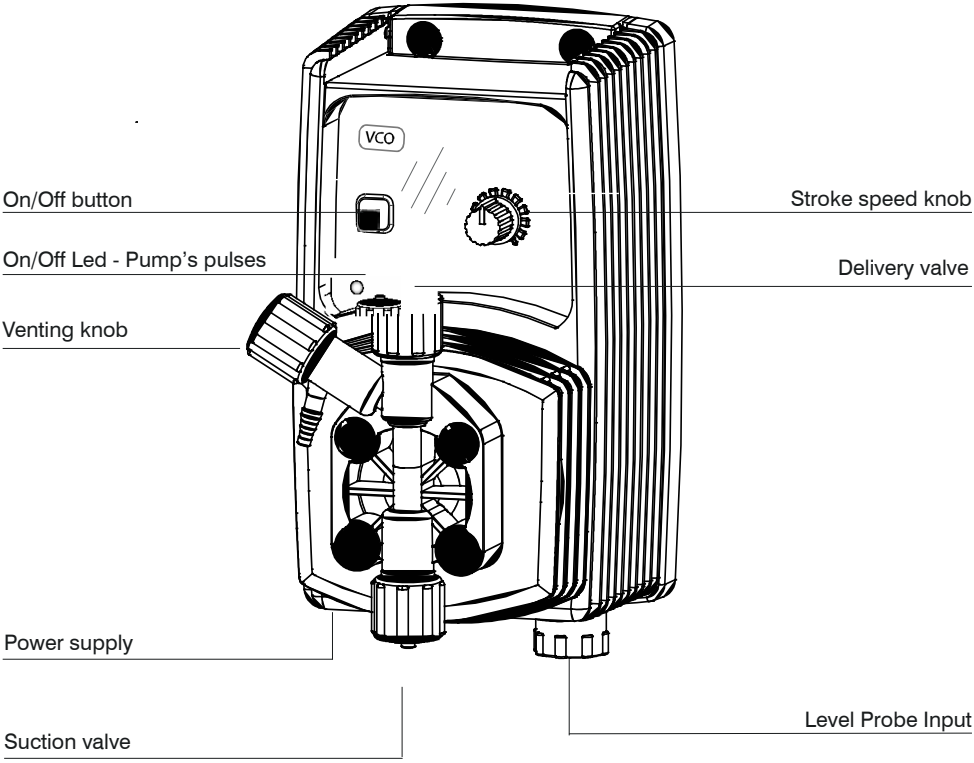

Note:
Shown image does not represent a specific pump's model. It is only for general purpose.

4. Before to Install warnings

Pump's installation and operativity is performed in 4 main steps:

Pump's installation
Hydraulic Installation (hoses, level probe, injection valve)
Electrical Installation (main power connection, priming)
Programming the pump.

Before to start, please read carefully the following safety information.

Protective clothes

Wear always protective clothes as masks, gloves, safety glasses and further security devices during ALL installation procedure and while handling chemicals.

Installation location

Pump must be installed in a safety place and fixed to the table / wall to avoid vibration problems!

Pump must be installed in a easy accessible place!

Pump must be installed in horizontal position!

Avoid water splashes and direct sun!

Hoses and Valves

Suction and delivery hoses must be installed in vertical position!
All hoses connections must be performed using only hands' force!
No tongs required!

Delivery hose must be firmly fixed to avoid suddenly movements that could damage near objects!

Suction hose must be shorter as possible and installed in vertical position to avoid air bubbles suction!

Use only hoses compatibles with product to dose! See chemical compatibility table. If dosing product is not listed please consult full Compatibility Table or contact chemical's manufacturer!

Feeder should be interlocked with a no-flow protection device to automatically shut-off the pumps when there is no flow!

Adequate measures shall be taken to prevent cross connection of chemicals!

Chemical feeding must be stopped during backwash cycles and periods of noflow as these conditions may introduce the potential for chemical overdosing. Not doing so may result in elevated chemical concentrations and hazerdous gas introduction into the pool or spa.

Pump must be installed in a stable support at a maximum height (from tank's bottom) of 1,5 meters.

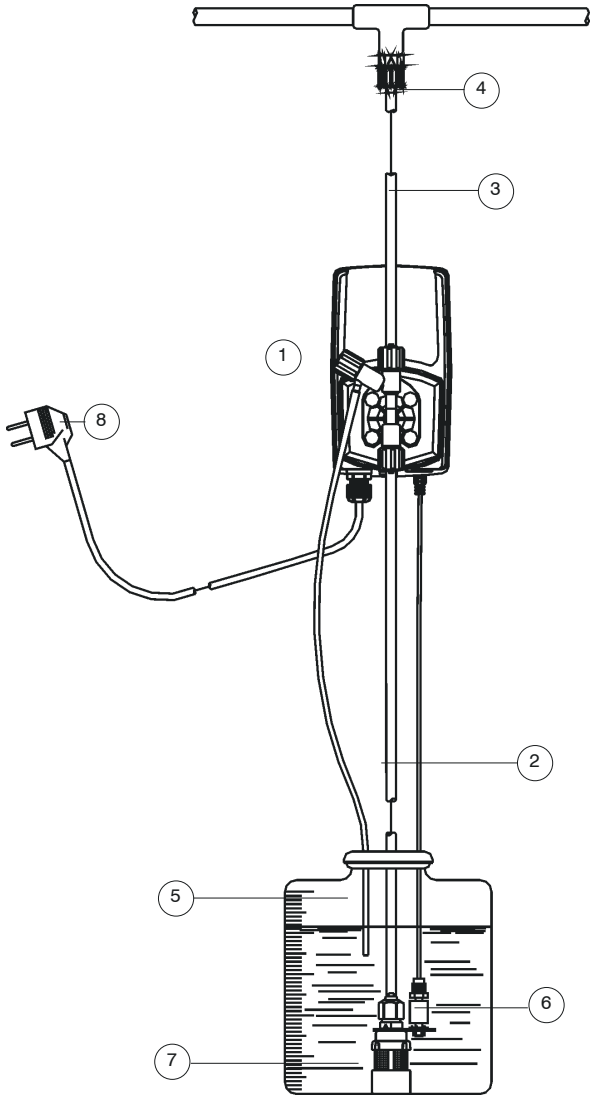

1 - Dosing Pump
2 - Suction Hose
3 - Delivery Hose
4 - Injection Valve
5 - Air discharge
6 - Level Probe
7 - Foot Filter
8 - Power Cable

6. Hydraulic Installation

Hydraulic connections are:

Suction Hose with level probe and foot filter
Delivery Hose with injection valve
Venting hose

Suction Hose.

Completely unscrew tightening nut from pump's head and remove assembling components: *tightening nut, holding ring and pipe holder.*

Assembly as shown in fig. (A). Insert hose into pipe holder until it reaches the bottom.

Lock hose on pump's head by screwing down the tightening nut.
Use only hands to do it!

Connect other side of the hose to the foot filter using the same procedure.

fig. (A)

Assembling foot filter with level probe.

Level probe must be assembled with foot filter using the provided kit.
Foot valve is made to be installed into tank's bottom without sediments priming problem.

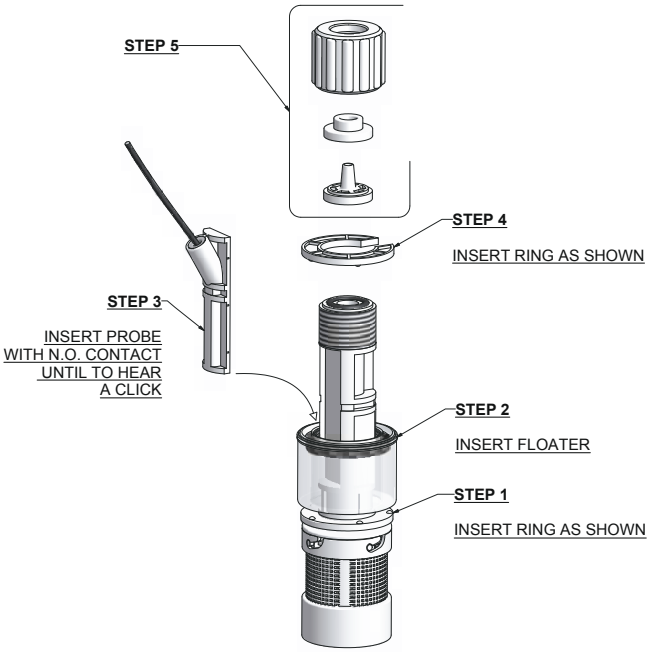

Connect BNC from level probe into pump's level input (front side of the pump).
Put level probe assembled with foot filter into tank's bottom.

Warning: If there is a mixer installed into tank, install a suction lance instead of level probe / foot filter.

Delivery Hose.

Completely unscrew tightening nut from pump's head and remove assembling components: *tightening nut, holding ring and pipe holder.*

Assembly as shown in fig. (A). Insert hose into pipe holder until it reaches the bottom.

Lock hose on pump's head by screwing down the tightening nut.
Use only hands to do it!

Connect other side of the hose to the injection valve using the same procedure.

7. Pump head

Injection Valve.

Injection valve must be installed on plant from water's input.
Injection valve will open at pressure greater than 0,3bar.

Venting hose.

Insert one side of Venting hose into discharge connector as shown in fig (C).

Insert other side of Venting hose into product's tank.
During priming procedure product exceeding will flow into tank.

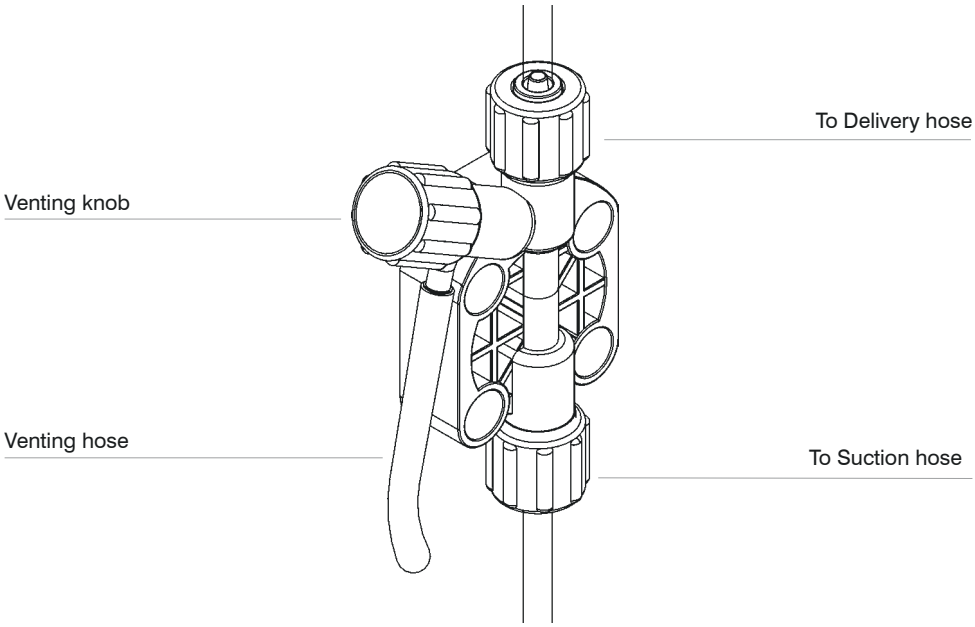

fig (C)

For priming procedure see the related chapter.

Self-venting pump head.

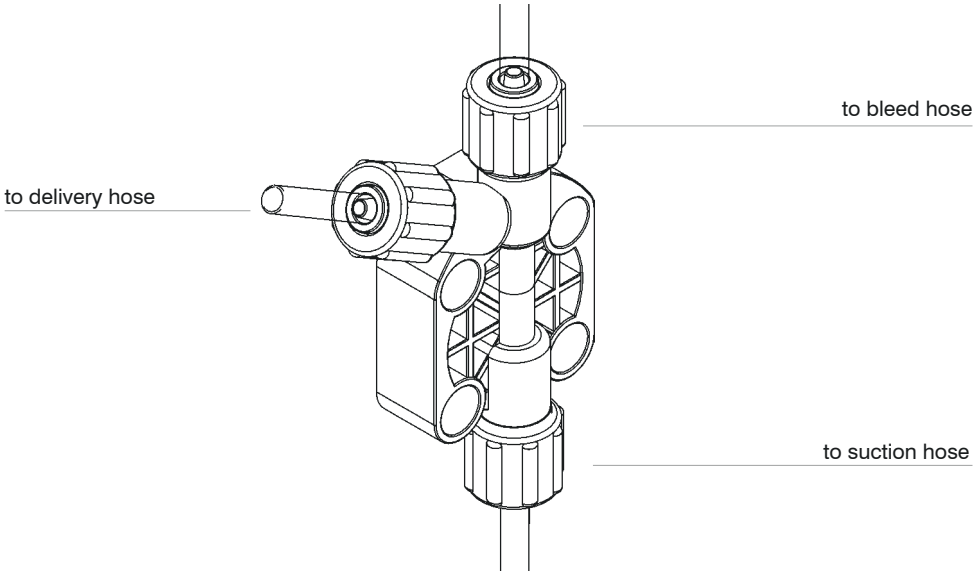

Self-venting pump head must be used when using chemicals that produce gas (i.e. hydrogen peroxide, ammonium, sodium hypoclorite at particular conditions).

Hoses assembling procedure (*including purge hose*) is described in fig. (A).

Notes:

- suction, delivery and venting valves are DIFFERENT! Do not exchange them!

- delivery and purge hoses are made of same material!

- it's allowed to lightly bend Venting hose!

- during calibration procedure ("TEST") insert Venting hose into BECKER test-tube!

8. Electrical installation

All electrical connections must be performed by AUTHORIZED AND QUALIFIED personnel only. Before to proceed, please, verify the following steps:

- verify that pump's label values are compatible with main power supply.

- pump must be connected to a plant with a differential switch (0,03A sensitivity) if there isn't a good ground.

- to avoid damages to the pump do not install it in parallel with heavy inductance load (for example: engines). A relay switch must be used. See below picture.

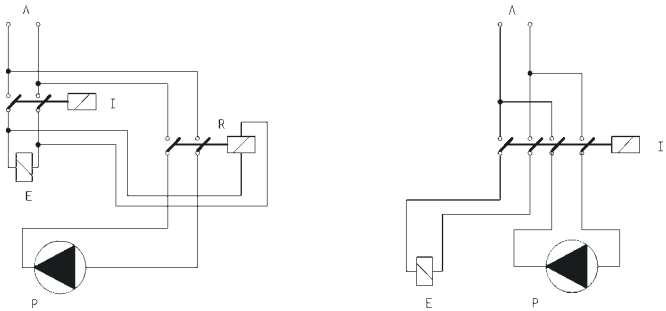

P - Dosing Pump
R - Relay
I - Switch or safety device
E - Electrovalve or inductance load
A - Main Power

- On pump's mother board there is a further protection against over voltages (275V - 150V) and distribution line noises (4KV for max 50μsec) as shown:

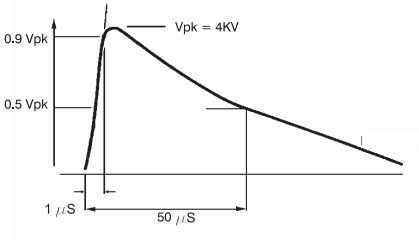

Once verified previous steps proceed as follows:

- check that “BNC” of level probe has been connected as described in “Hydraulic Installation” chapter.

- connect “BNC” and external signal to pump’s “INPUT” connectors.

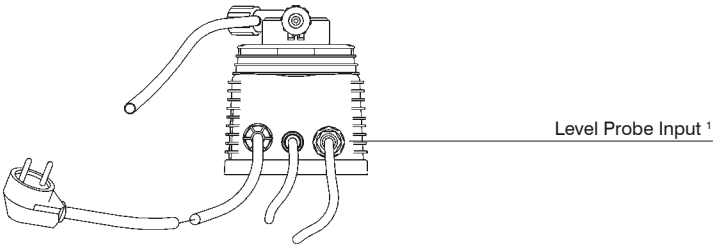

(bottom view)

[1] *Level Probe Input available on: VCL*

WARNING
IF EQUIPMENT IS SUPPLIED WITH A PLUG:

If an appliance coupler or separable plug is used as the disconnecting device, it shall be readily identifiable and easily reached by the operator. For single-phase portable equipment, a plug on a cord of length not greater than 3m is considered to be easily reached.

WARNING
IF EQUIPMENT IS NOT SUPPLIED WITH A PLUG:

a) a switch or circuit-breaker shall be included in the building installation
b) it shall be in close proximity to the equipment and within easy reach of the operator
c) it shall be marked as the disconnetting device for the equipment

9. Models

LEVEL ALARM

CL type pumps are provided with a liquid level alarm to indicate product tank is empty. The level probe is connected to the right BNC plug on pump's bottom panel. The level probe is made of a N.O. reed contact (10VA, 1A max., 230Vac max.) closed by a floating magnet housed in a (PP) plastic box. When the product level goes below the minimum the magnet closes the reed contact. The pump stops and the red LED on pump's front panel indicates the alarm status.

PUMP TYPES

Pumps mod. "VCLF" and "VCL" (12-24 Vac/Vdc) are equipped with a bicolour led.
Led on, red colour: low level product alarm. Check product's tank and restore the level.
Led on, blinking green colour: pump normal operating mode.
Led on, blinking green colour (one second on, one second off): power supply out of range. Check pump's label and check the main power.

VCO

Constant pump with flow control (front panel knob may be set from 0% to 100% of pump nominal capacity). Flow control is electronically set and it operates on pump injections number. To avoid linearity problem do not set the knob of pump flow between 0% and 10%.VCO may operate in constant dosing mode or On-Off mode (using an external signal).Dosing example using an VCO 0505: to dose 2,5 l/h at 5bar counter-pressure rotate front panel knob to 50%.

VCO / VCOG has a divider (x- 0,1) to reduce by ten times the pump capacity by dividing the pump stroke speed.
How to enable “divider mode”:

- set the pump into OFF* mode;
- keeping pressed the on/off button, wait 3 flashes from the status led. The pump will change activity led color in orange then it will start the dosing activity with the stroke speed reduced ten times than the value set on stroke lenght knob.

To disable the “divider mode”, put the pump in OFF mode. Keeping pressed the on/off button, wait 3 flashes of the status led. Pumps's led will change in green color.

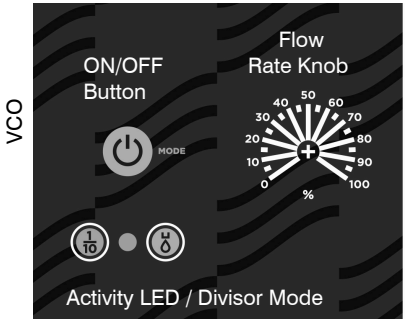

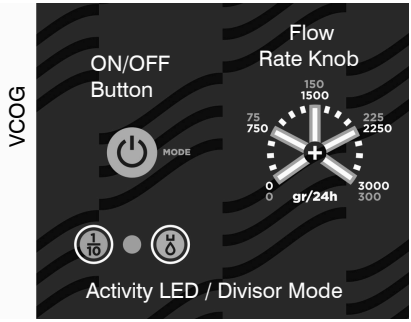

LED
The led on the frontal panel shows the pump’s operating status through 5 flashing:

LED	PUMP’S STATUS
Three times per second blinking (RED)	Too low power supply
Two times per second blinking (RED)	Too high power supply
One time every 2 seconds blinking (GREEN) One time every 2 seconds blinking into DIVIDE mode (ORANGE)	OFF mode. Pump powered.
Always ON (GREEN), but off when pump strokes Always ON (ORANGE), but off when pump strokes into DIVIDE mode	ON mode. Pump powered STANDARD mode. (120strokes per minute) ON mode. Pump powered DIVIDE mode. (120strokes per minute)
Always ON (GREEN), but off when pump strokes Always ON (ORANGE), but off when pump strokes into DIVIDE mode	ON mode. Pump priming and operating in STANDARD VCOG mode. ON mode. Pump priming and operating in DIVIDE VCOG mode.

VCOG is automatic priming model: when the pump is working (ON - RED LED), keep pressed on/off key for 7 seconds. The pump starts priming. Leave the key to turn off the pump (OFF - ORANGE LED).

LED ON VCO PUMPS WITH 12/24 VAC/VDC POWER SUPPLY

LED	PUMP'S STATUS
Three times per second blinking (GREEN)	Too low power supply
Two times per second blinking (GREEN)	Too high power supply
One time every 2 seconds blinking (GREEN)	OFF mode. Pump powered.
Always ON (GREEN), but off when pump strokes	ON mode. Pump priming and operating in STANDARD mode .
Always ON (GREEN), but off every 2 seconds	ON mode. Pump priming and operating in DIVIDE mode .

9. Models

VCL

Constant dosing pump with *level alarm*.
A red led indicates that the product's tank is empty. During this condition the pump does not dose.
The pump has flow control (front panel knob may be set from 0% to 100% of pump nominal capacity).
Flow control is electronically set and it operates on pump injections number. To avoid linearity problem do not set the knob of pump flow between 0% and 10%.

VCL / VCLG has a divider (x- 0,1) to reduce by ten times the pump capacity by dividing the pump stroke speed.
How to enable "divider mode":

- set the pump into OFF* mode;
- keeping pressed the on/off button, wait 3 flashes from the status led. The pump will change activity led color in orange then it will start the dosing activity with the stroke speed reduced ten times than the value set on stroke lenght knob.
- To disable the "divider mode", put the pump in OFF mode. Keeping pressed the on/off button, wait 3 flashes of the status led. Pumps's led will change in green color.

VCL

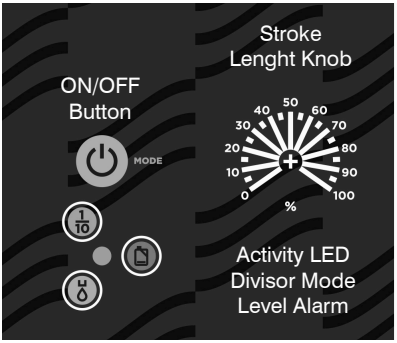

VCLG

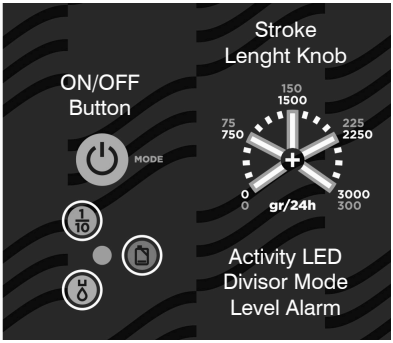

LED
The led on the frontal panel shows the pump's operating status through 5 flashing:

LED	PUMP'S STATUS
Three times per second blinking (RED)	Too low power supply
Two times per second blinking (RED)	Too high power supply
One time every 2 seconds blinking (GREEN) One time every 2 seconds blinking into DIVIDE mode (ORANGE)	OFF mode. Pump powered.
Always ON (GREEN), but off when pump strokes Always ON (ORANGE), but off when pump strokes into DIVIDE mode	ON mode. Pump powered STANDARD mode. (120strokes per minute) ON mode. Pump powered DIVIDE mode. (120strokes per minute)
Always ON (GREEN), but off when pump strokes Always ON (ORANGE), but off when pump strokes into DIVIDE mode	ON mode. Pump priming and operating in STANDARD VCLG mode. ON mode. Pump priming and operating in DIVIDE VCLG mode.
FIXED RED LED	Level Alarm (VCL / VCL models only)

VCLG is automatic priming model: when the pump is working (ON - RED LED), keep pressed on/off key for 7 seconds. The pump starts priming. Leave the key to turn off the pump (OFF - ORANGE LED).

LED ON VCL PUMPS WITH 12/24 VAC/VDC POWER SUPPLY

LED	PUMP'S STATUS
Three times per second blinking (GREEN)	Too low power supply
Two times per second blinking (GREEN)	Too high power supply
One time every 2 seconds blinking (GREEN)	OFF mode. Pump powered.
Always ON (GREEN), but off when pump strokes Always ON (GREEN), but off every 2 seconds	ON mode. Pump priming and operating in STANDARD mode . ON mode. Pump priming and operating in DIVIDE mode .
FIXED RED LED	Level Alarm (VCL / VCL models only)

VIS

Proportional/constant pump driven by a digital signal.

Setting the switch on the *CONSTANT* position, the pump has stroke speed adjustment between 0 and 100% of indicated capacity (see label on pump type). The % marked knob sets the pump capacity, changing linearly the magnet stroke number per minute. It is strongly suggested to not operate the pump in the range from 0 to 10%, since there is not a linear correlation with the pump stroke speed in that range.

Setting the switch on the *PROPORTIONAL* position, to each external voltage free pulse correspond a magnet stroke. When proportional position is set, the % marked knob does NOT affect the pump capacity. IS proportional dosing pump can be driven by any external device (PCs, PLCs, etc) that produce a digital signal. The digital signal (N.O. contact) must be applied to the cable provided with the pump, already internal connected. If the digital signal is produced by an “Open Collector” transistor take care of connections:

- red wire : *positive (+)*
- black wire : *negative (-)*

How to enable “Proportional mode”:
- set the pump into OFF* mode;
- keeping pressed the on/off button, wait 3 flashes from the status led.

Follow the same procedure to disable the “Proportional mode”.

VIS

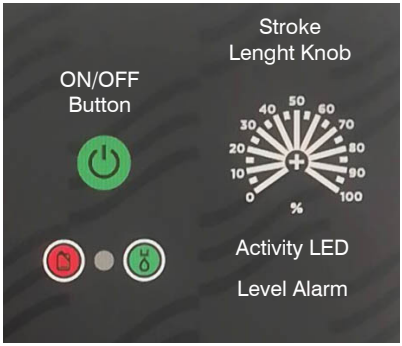

LED

The led on the frontal panel shows the pump’s operating status through different flashing:

LED COLOUR	BLINKING	PUMP’S STATUS
RED	Three times per second	Too low power supply
RED	Two times per second	Too high power supply
RED	Fixed	Level Alarm
GREEN	One time every 4 seconds	ON Proportional working mode
GREEN	Blink at pump stroke	ON Constant working mode

MANUAL PRIMING / DISCHARGING

1. Connect the pump to main power.

2. Rotate front panel knob to 70%.

3. Turn on the pump.

4. Rotate Venting knob (open it completely).

5. The chemical will begin to flow into Venting hose. Close the Venting knob.

6. Proceed to normal operating mode.

11. Troubleshooting

PROBLEM	POSSIBLE CAUSE
Pump doesn't turn on.	*Pump isn't powered. Connect it to main supply.* *Pump's protection fuse is broken. Replace it. See replacement procedure.* *Pump's main board is broken. Replace it. See replacement procedure.*
Pump is not dosing and solenoid is operating.	*The foot filter is obstructed. Clean it.* *Suction hose is empty. Pump must be primed. Repeat priming procedure.* *Air bubbles inside hydraulic circuit. Check valves - hoses - fittings.* *Product to dose is generating gas. Turn Venting knob and let air flow away.* *Use a self-venting pump head.*
Pump is not dosing and solenoid isn't operating or slightly operating.	*Crystals presence inside valves. Check them and try to dose 2-3 liters of normal water. Change valves.* *Injection valve obstructed. Change it.*

12. Fuse and main board replacement

Fuse or main board replacement is allowed to qualified personnel only. Before to operate disconnect the pump from main power and all hydraulic connections.

For fuse replacement is necessary to use a 3x16 and 3x15 screwdriver and a new fuse (same model of old one).

For main board replacement is necessary to use a 3x16 and 3x15 screwdriver and a new main board (same model of old one).

Fuse replacement procedure:

- Remove 6 screws from pump's back.

- Pull pump's back cover until it's completed separated from pump's front. Be careful of the knob's spring.

- Locate the blown fuse and replace it.

- Reassemble the pump.

- Reinsert screws.

Main board replacement procedure:

- Remove 6 screws from pump's back.

- Pull pump's back cover until it's completed separated from pump's front. Be careful of the knob's spring.

- Remove board's screws.

- Completely disconnect wires from main board and replace it. Reinsert screws.

- Reconnect wires to the main board (see enclosed picture).

- Reassemble the pump.

- Reinsert screws.

13. Main board

VCO

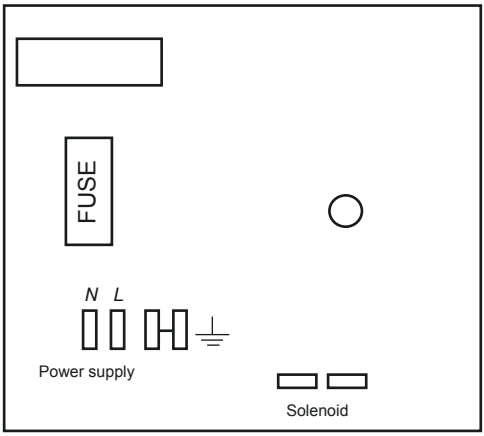

VCL

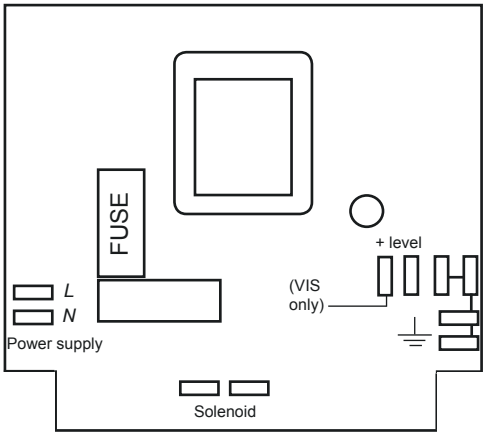

Maintenance schedule

In order to ensure the requirements of potable drinking water treated and the maintenance of the improvements as declared by the manufacturer, this equipment must be checked at least once a month.

OPERATOR PROTECTION
Use safety equipment according to the company regulations.
Use this safety equipment within the work area during installation, service and when handling chemicals:
- **protective mask**
- **protective gloves**
- **safety goggles**
- **ear plugs or hear muffs**
- **further security device, if necessary.**

POWER SUPPLY DISCONNECTION
Always disconnect power to the motor before you perform any installation or maintenance tasks. Failure to disconnect power will result in serious physical injury.

Installation and maintenance tasks should be carried out by AUTHORIZED AND QUALIFIED PERSONNEL only in accordance with local regulations.

Use original spare parts.

Maintenance inspection

Shutdown the dosing pump before any maintenance operation **Shutdown procedure.**

A maintenance schedule includes these types of inspections:
- Routine maintenance and inspections
- Three-month inspections
- Annual inspections

Shorten the inspection intervals appropriately if the pumped chemical is abrasive or corrosive.

Routine maitenance and inspections
Perform these tasks whenever you perform routine maintenance:
- Inspect the seal. Ensure that there are no leaks from the mechanical seal.
- Check electrical wiring
- Check for unusual noise and vibration (noise allowed 73 dbA; ± 5 dB).
- Check the pump and piping for leaks.
- Check for corrosion on parts of the pump and / or on hoses.

Three-month inspections
Perform these tasks every three months:
- Check that the tightenings.
- Check the mechanical seal if the pump has been left idle.

Annual inspections
Perform these inspections one time each year:
- Check the pump capacity (as per nameplate).
- Check the pump pressure (as per nameplate).
- Check the pump power (as per nameplate).

f the pump performance does not satisfy your process requirements, and the process requirements have not changed, then perform these steps:
1. Disassemble the pump.
2. Inspect it.
3. Replace worn parts.

Shutdown procedure

This procedure SHOULD BE CARRIED OUT BY AUTHORIZED AND QUALIFIED PERSONNEL

OPERATOR PROTECTION
Use safety equipment according to the company regulations.
Use this safety equipment within the work area during installation, service and when handling chemicals:
- **protective mask**
- **protective gloves**
- **safety goggles**
- **ear plugs or hear muffs**
- **further security device, if necessary.**

Shutdown the dosing pump **before any maintenance operation** or **before long downtimes**.
Disconnect power and ensure it cannot be restarted.

Depressurize the system. The liquid may leak splashing.

Drain the chemical from pump head.
Release the pressure and disconnect the disharge pipe from the discharge valve.
Rinse the pump head and clean all valves.

B Appendix. Construction Materials and Technical info

TECHNICAL FEATURES

Power supply: 230 VAC (180-270 VAC) - 50/60 Hz
Power supply: 115 VAC (90-135 VAC) - 50/60 Hz
Power supply: 24 VAC (20-32 VAC) - 50/60 Hz
Power supply: 12 VDC (10-16 VDC)

Pump strokes: 0 - 180
Suction Height: 1,5 metres
Environment Temperature: 0 - 45°C (32 - 113°F)
Chemical Temperature: 0 - 50°C (32 - 122°F)
Installation Class: II
Pollution Level: 2
Audible Noise: 73dbA
Packaging and Transporting Temperature: -10-+50°C (14 - 122°F)
Protection degree IP65

MANUFACTURING MATERIALS

Case: PPO
Pump head: PVDF
Diaphragm: PTFE
Balls: CERAMIC, GLASS, PTFE, SS *
Suction Pipe PVC
Delivery Pipe: PE
Valve Body: PVDF
O-ring: FP, EP, WAX, SI, PTFE *
Injection connector PP, PVDF (ceramic, HASTELLOY C276 spring)
Level Probe: PP, PVDF *
Level probe cable: PE
Foot Filter: PP, PVDF *

* as ordered.

CAPACITY						
MODEL	FLOW			cc per STROKE	Maximum pressure	
	min cc/h	max l/h	Max GPH		bar	PSI
2001	97,2	1	0,26	0,09	20	290
1802	205,2	2	0,53	0,19	18	261
1804	399,6	4	1,1	0,37	18	261
1502	205,2	2	0,5	0,19	15	217
1504	399,6	4	1,1	0,37	15	217
1505	496,8	5	1,3	0,46	15	217
1004	399,6	4	1,1	0,37	10	145
1005	496,8	5	1,3	0,46	10	145
1010	1004,4	10	2,6	0,93	10	145
0706	604,8	6	1,6	0,56	7	101
0510	1004,4	10	2,6	0,93	5	72
0512	1198,8	12	3,2	1,11	5	72
0501	97,2	1	0,3	0,09	5	72
0502	99,2	2	0,5	0,12	5	72
0408	799,2	8	2,1	0,74	4	58
0310	1004,4	10	2,64	0,93	3	43
0215	1501,2	15	3,96	1,39	2	29
0116	1598,4	16	4,2	1,48	1	14

Pump Head J

20 01

l/h 01

bar 20

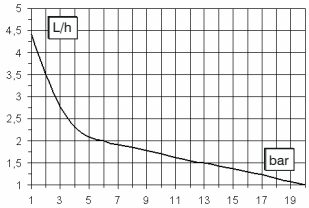

Pump Head K

18 04

l/h 04

bar 18

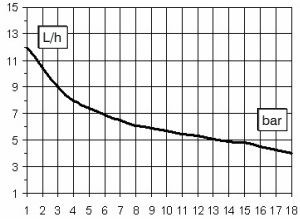

Pump Head K

18 02

l/h 02

bar 18

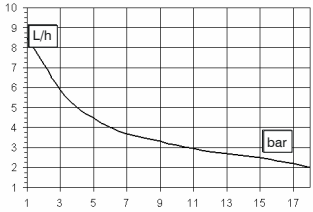

Pump Head K

15 04

l/h 04

bar 15

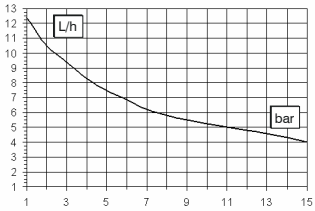

Pump Head K

15 02

l/h 02

bar 15

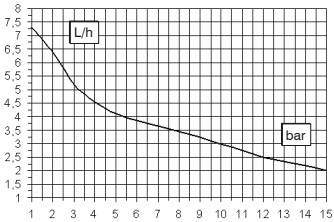

Pump Head K

10 10

l/h 10

bar 10

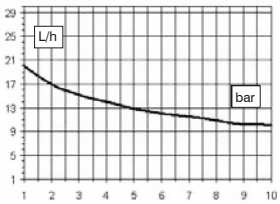

Pump Head K

10 05

l/h 05

bar 10

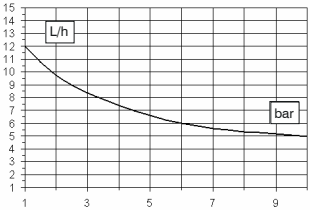

Pump Head K

10 04

l/h 04

bar 10

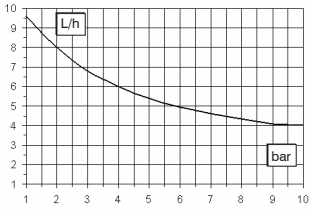

Pump head K

07 06

l/h 06

bar 07

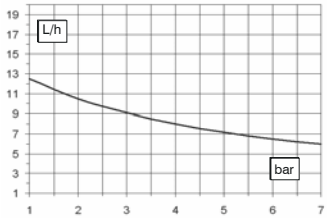

Pump head K

05 10

l/h 10

bar 05

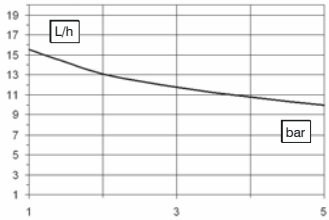

Pump head K

05 01

l/h 01

bar 05

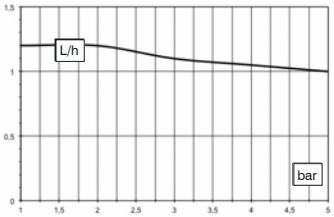

Pump head K

05 12

l/h 12

bar 05

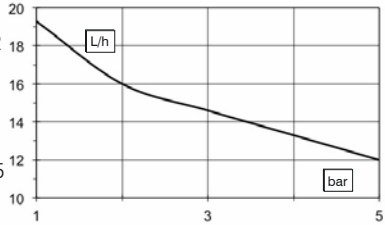

Pump head K

04 08

l/h 08

bar 04

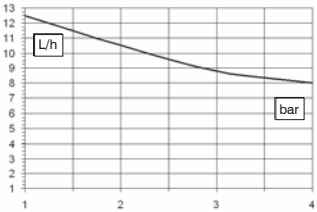

Pump head K

03 10

l/h 10

bar 03

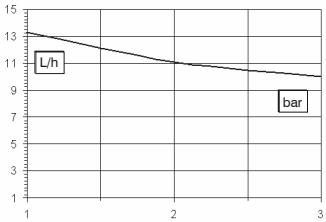

Pump head K

02 15

l/h 15

bar 02

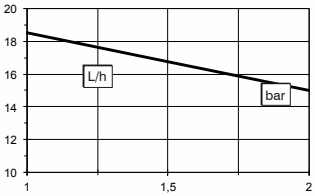

Pump head K

01 16

l/h 16

bar 01

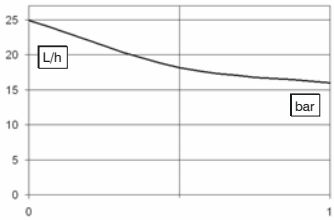

Flow rate indicated is for H_2O at 20°C at the rated pressure.
Dosing accuracy ± 2% at constant pressure ± 0,5 bar.

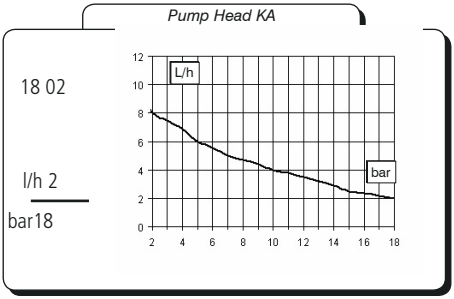
Pump Head KA
18 02
l/h 2
bar18
L/h
bar

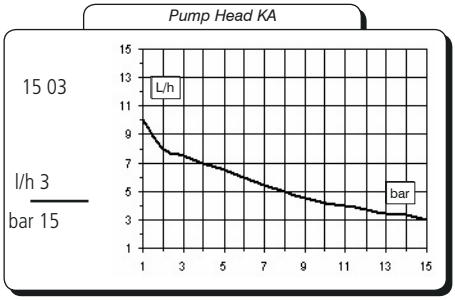
Pump Head KA
15 03
l/h 3
bar 15
L/h
bar

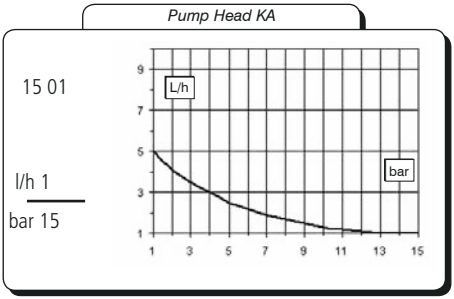
Pump Head KA
15 01
l/h 1
bar 15
L/h
bar

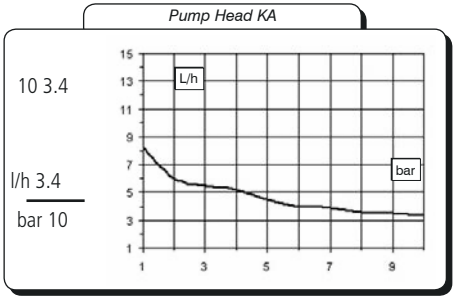
Pump Head KA
10 3.4
l/h 3.4
bar 10
L/h
bar

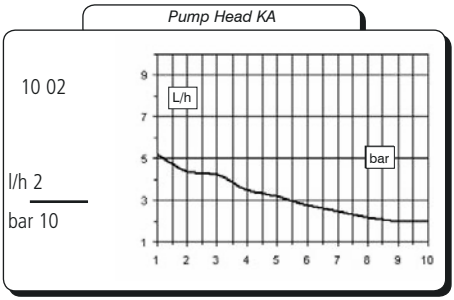
Pump Head KA
10 02
l/h 2
bar 10
L/h
bar

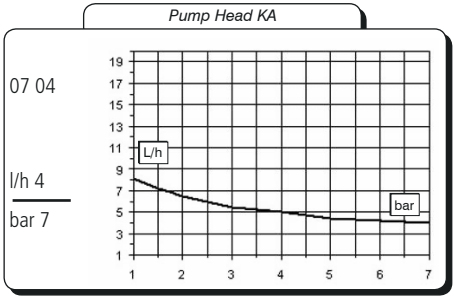
Pump Head KA
07 04
l/h 4
bar 7
L/h
bar

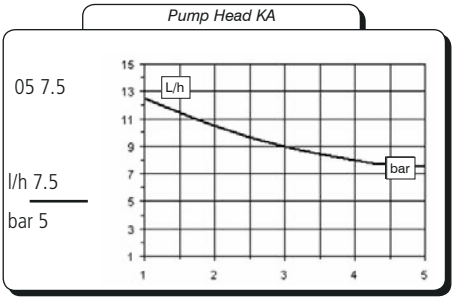
Pump Head KA
05 7.5
l/h 7.5
bar 5
L/h
bar

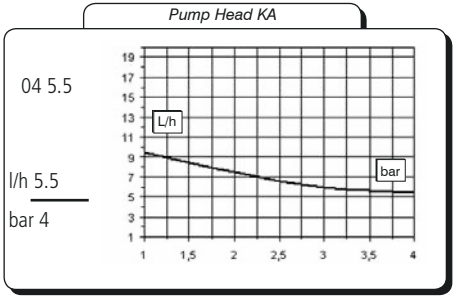
Pump Head KA
04 5.5
l/h 5.5
bar 4
L/h
bar

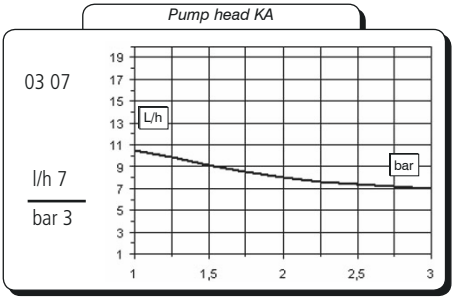

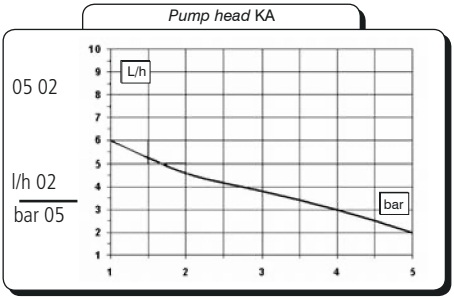

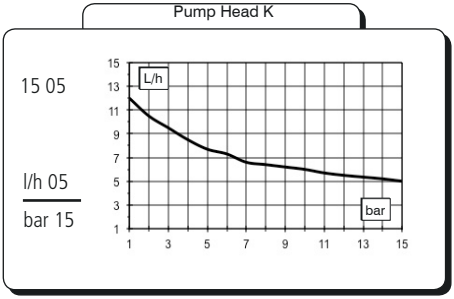

Flow rate indicated is for H_2O at 20°C at the rated pressure. Dosing accuracy ± 2% at constant pressure ± 0,5 bar.

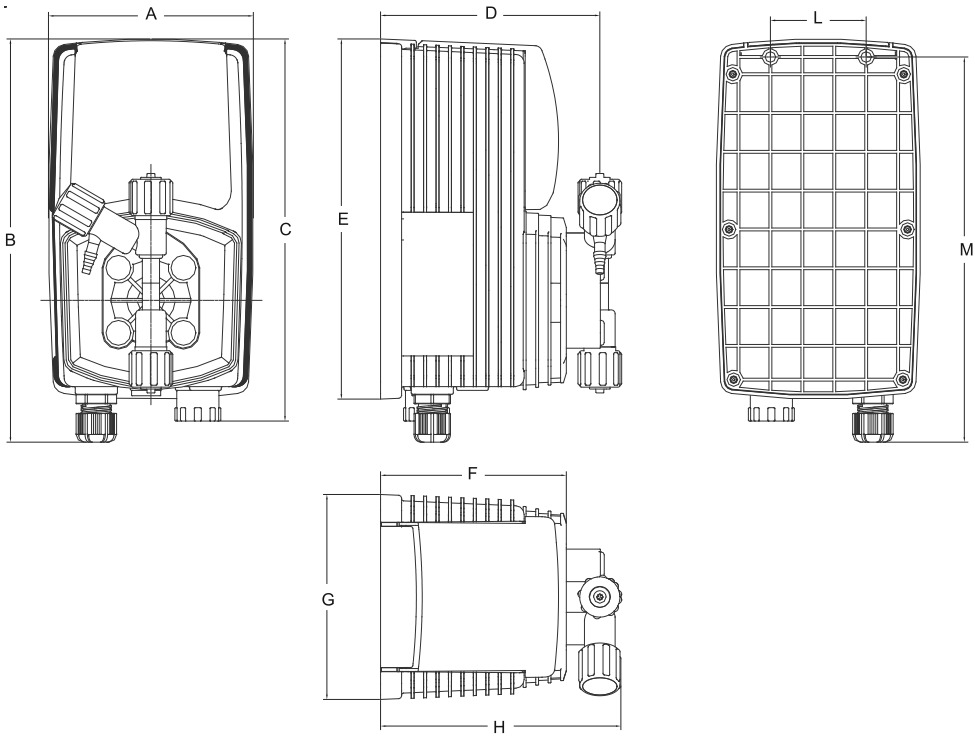

DIMENSIONS		
	mm	*inches*
A	106.96	4.21
B	210.44	8.28
C	199.44	7.85
D	114.50	4.50
E	187.96	7.40
F	97.00	3.81
G	106.96	4.21
H	125.47	4.93
L	50.00	1.96

E Appendix. Chemical Compatibility Table

Chemical compatibility table

Solenoid driven metering pumps are widely used to dose chemical fluids and it is important that the most suitable material in contact with fluid is selected for each application. This compatibility table serves as a useful help in this respect. All the informations in this list are verified periodically and believed to be correct on the date of issuance. All the informations in this list are based on manufacturer's data and its own experience but since the resistance of any material depends by several factors this list is supplied only as an initial guide, in no way manufacturer makes warranties of any matter respect to the informations provided in this list.

Tab. 1. Chemical compatibility table.

Product	Formula	Ceram.	PVDF	PP	PVC	SS 316	PMMA	Hastel.	PTFE	FPM	EPDM	NBR	PE
Acetic Acid, Max 75%	CH3COOH	2	1	1	1	1	3	1	1	3	1	3	1
Hydrochloric Acid, Concentrate	HCl	1	1	1	1	3	1	1	1	1	3	3	1
Hydrofluoric Acid 40%	H2F2	3	1	3	2	3	3	2	1	1	3	3	1
Phosphoric Acid, 50%	H3PO4	1	1	1	1	2	1	1	1	1	1	3	1
Nitric Acid, 65%	HNO3	1	1	2	3	2	3	1	1	1	3	3	2
Sulphuric Acid, 85%	H2SO4	1	1	1	1	2	3	1	1	1	3	3	1
Sulphuric Acid, 98.5%	H2SO4	1	1	3	3	3	3	1	1	1	3	3	3
Amines	R-NH2	1	2	1	3	1	-	1	1	3	3	1	1
Sodium Bisulphite	NaHSO3	1	1	1	1	2	1	1	1	1	1	1	1
Sodium Carbonate (Soda)	Na2CO3	2	1	1	1	1	1	1	1	2	1	1	1
Ferric Chloride	FeCl3	1	1	1	1	3	1	1	1	1	1	1	1
Calcium Hydroxide (Slaked Lime)	Ca(OH)2	1	1	1	1	1	1	1	1	1	1	1	1
Sodium Hydroxide (Caustic Soda)	NaOH	2	3	1	1	1	1	1	1	2	1	2	1
[1] Calcium Hypochlor.(Chlor. ted Lime)	Ca(OCl)2	1	1	1	1	3	1	1	1	1	1	3	1
Sodium Hypochlorite, 12.5%	NaOCl + NaCl	1	1	2	1	3	1	1	1	1	1	2	3
Potassium Permanganate, 10%	KMnO4	1	1	1	1	1	1	1	1	1	1	3	1
Hydrogen Peroxide, 30% (Perydrol)	H2O2	1	1	1	1	1	3	1	1	1	3	3	1
Aluminium Sulphate	Al2(SO4)3	1	1	1	1	1	1	1	1	1	1	1	1
Copper-II-Sulphate (Roman Vitriol)	CuSO4	1	1	1	1	1	1	1	1	1	1	1	1

[1] Calcium Hypochlor.(Chlor.ted Lime): WQA test was based on 1% Calcium Hypochlorite solution.

1 - Good resistance rating
2 - Fairly resistance rating
3- Not resistant

Materials

Polyvinyldene fluoride (PVDF) .....Pump heads, Valves, Fittings
Polypropylene (PP).....Pump heads, Valves, Fittings
PVC .....Pump heads
Stainless steel (SS 316).....Pump heads, Valves
Polymethyl Metacrilate Acrylic (PMMA) ...Pump heads
Polytetrafluoroethylene (PTFE) .....Diaphragm
Fluorocarbon (FPM).....O-ring
Ethylene propylene (EPDM).....O-ring
Nitrile (NBR).....O-ring

NOTICE: always specify the pump’s label when ordering spare parts.

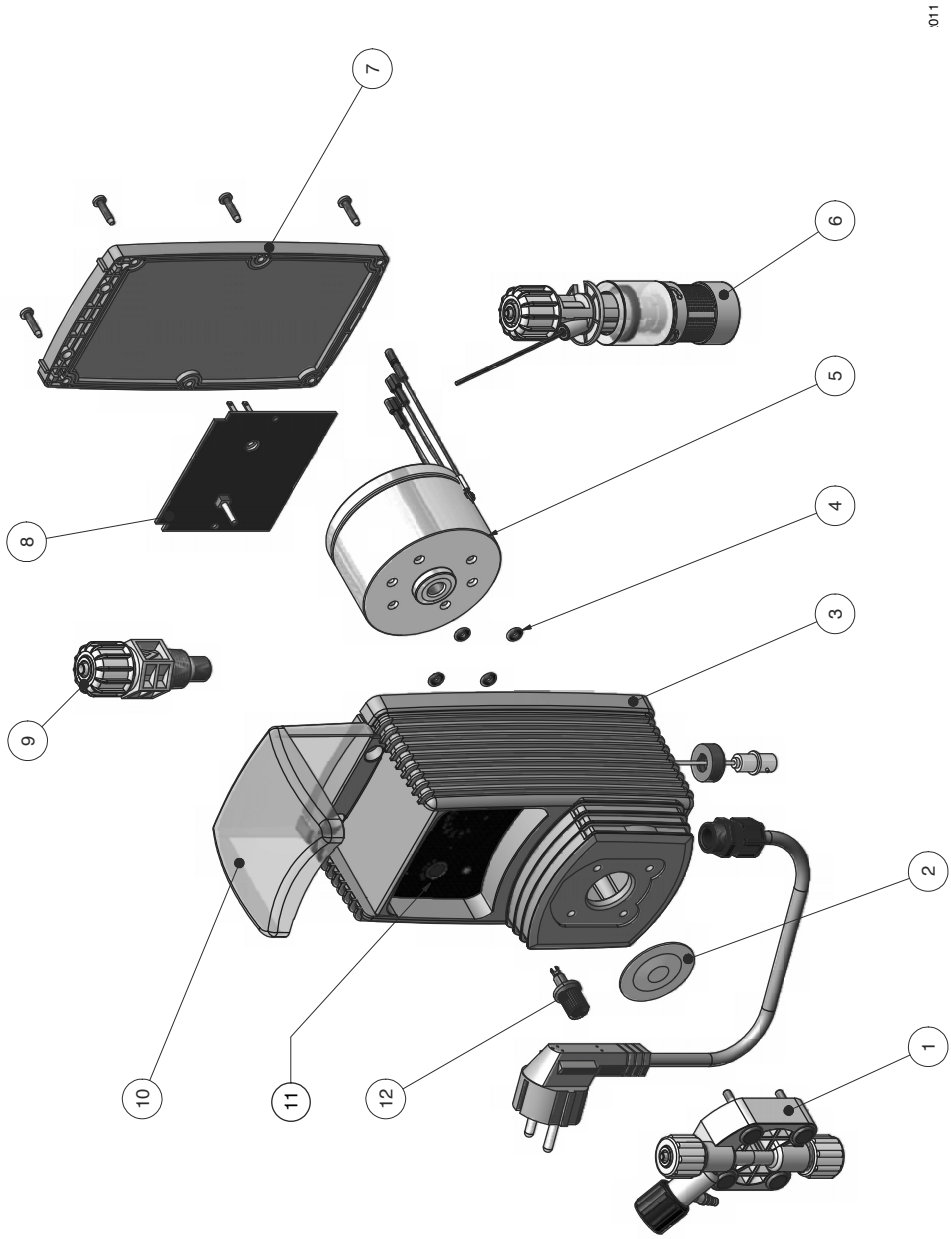

PRODUCT SERVICE REPAIR FORM

ENCLOSE THE PRESENT FORM TO THE DELIVERY NOTE

DATE .....

SENDER

Company name.....

Address .....

Phone no. .....

Contact person.....

PRODUCT TYPE (see product label)

DEVICE CODE .....

S/N (serial number).....

OPERATING CONDITIONS

Location/installation description .....

.....

Chemical .....

Start-up (date) ..... Running time (approx. hours).....

REMOVE ALL THE LIQUID INTO THE PUMP HEAD AND DRY IT BEFORE PACKAGING IN ITS ORIGINAL BOX.

DESCRIPTION OF PROBLEM

☐ MECHANICAL

- Wear parts.....
- Brekage/other damages .....
- Corrosion.....
- Other.....

☐ ELECTRICAL

- Connections, connector, cables .....
- Operating controls (keyboard, display, etc.) .....
- Elettronics.....
- Other.....

☐ LEAKS

- Connections.....
- Pump head .....

☐ NOT OR INADEQUATE FUNCTION/OTHER

.....

.....

.....

I declare that the dosing pump is free of any hazardous chemical.

Signature of the compiler

Company stamp

Summary

1. Introduction 3
2. Unpacking 4
3. General description 5
4. Before to Install warnings 6
5. Installation draw 7
6. Hydraulic Installation 8
7. Pump head 10
7.1 Self venting pump head 11
7. Electrical installation 12
8. Models 14
9. Priming 17
10. Troubleshooting 18
11. Fuse and main board replacement 19
12. Main board 20
A Appendix. Maintenance and chemicals concentration. 21
B Appendix. Construction Materials and Technical info 22
C Appendix. Delivery Curves 23
C Appendix. Delivery Curves 24
C Appendix. Delivery Curves (Self Venting) 25
D Appendix. Dimensions 27
E Appendix. Chemical Compatibility Table 28
G Appendix. “V” series pump exploded view 29
H Appendix. Summary 31

Technical features and drawings are subject to changes and modifications without any advice.

PRECAUTIONS RELATING TO DIRECTIVES, REGULATIONS AND STANDARDS

§ CE/EU and UKCA marking

We guarantees that this product meets the essential requirements of the applicable Directives and Regulations based on the following specifications. Please carefully consider the following specifications for use of the product in European Union member countries and the United Kingdom.

• CE/EU harmonized directives and standards

Directives
DIRECTIVE 2006/42/EC
DIRECTIVE 2014/35/EU
DIRECTIVE 2014/30/EU
DIRECTIVE 2011/65/EU
DELEGATED DIRECTIVE (EU) 2015/863

Harmonized standards
EN ISO 12100
EN 809
EN ISO 20361
EN IEC 61326-1
EN 61010-1
EN IEC 63000

• UKCA harmonized regulations and standards

Regulations
2008 No. 1597
2008 2016 No. 1091
2016 No. 1101
2012 No. 3032

Harmonized standards
BS EN ISO 12100
BS EN 809
BS EN ISO 20361
BS EN IEC 61326-1
BS EN 61010-1
BS EN IEC 63000

Disposal of end-of-life equipment by users

This symbol warns you not to dispose of the product with normal waste. Respect human health and the environment by giving the discarded equipment to a designated collection center for the recycling of electronic and electrical equipment. For more information visit the online site.

When dismantling a pump please separate material types and send them according to local recycling disposal requirements. We appreciate your efforts in supporting your local Recycle Environmental Program. Working together we'll form an active union to assure the world's invaluable resources are conserved.