R990525

VMS - VMSA - VMS PER

PRODUCT LABEL

VMS

VMSA

VMS PER

SOLENOID DRIVEN METERING PUMPS

EN

OPERATING MANUAL

This operating instructions contains safety information that if ignored can endanger life or result in serious injury.

Read these instructions **carefully** before use and keep them for future reference. The original instruction is in Italian. All non-Italian instructions are translations of the original instruction.

Information and specifications on this manual could be uncorrect or could have printing errors. Specifications are subject to change without notice.

Version: R1-11-13

Product Description
Descrizione Prodotto

Electromagnetic dosing pump, V and VMS series
Pompa dosatrice elettromagnetiche, serie V e VMS

Product Identification Codes
(the "_" symbols complete the product code based on the configuration of the variants)
Codici Identificativi Prodotto
(i simboli "_" completano il codice del prodotto in base alla configurazione delle varianti)

VAF _____	VHD _____	VLP _____
VAG _____	VHE _____	VLR _____
VAL _____	VPV _____	VLS _____
VAM _____	VRE _____	VMF _____
VAN _____	VPX _____	VML _____
VAO _____	VRH _____	VMP _____
VAP _____	VSA _____	VMS _____
VAR _____	VSC _____	VMV _____
VAS _____	VSE _____	VNP _____
VAU _____	VSL _____	VNS _____
VAV _____	VSN _____	VNT _____
VBA _____	VSO _____	VOG _____
VCD _____	VSP _____	VOH _____
VCL _____	VSR _____	VOP _____
VCO _____	VSS _____	VOS _____
VDA _____	VUA _____	VP2 _____
VDC _____	VUG _____	VPA _____
VDD _____	VUL _____	VPB _____
VDS _____	VUM _____	VPH _____
VEH _____	VUS _____	VPM _____
VEN _____	VIP _____	VPN _____
VER _____	VIS _____	VPO _____
VES _____	VLD _____	VPP _____
VFM _____	VLE _____	VPS _____
VFS _____	VLG _____	

GENERAL SAFETY GUIDELINES

Operating, installing, or maintaining the unit in any way that is not covered in this manual could cause death, serious personal injury, or damage to the equipment.

ICON

This manual use the following safety message icon:

Danger!
Indicates a hazardous situation which, if not avoided, will result in death or serious injury.

Warning!
Indicates a hazardous situation which, if not avoided, could result in death or serious injury.

Important - A practice not related to personal injury or additional information.

Cross reference - An instance which refers to related information elsewhere in the same document

PURPOSE OF USE AND SAFETY

METERING PUMP IS INTENDED FOR CHEMICAL DOSING AND DRINKING WATER TREATMENT.

Do not use in explosive area (EX).
Do not use with flammable chemicals.
Do not use with radioactive chemicals.

Use after a proper installation.

Use the pump in accordance with the data and specifications printed on the label.

Do not modify or use in a manner inconsistent with the provisions of the operating manual.

Keep the pump protected from sun and water. Avoid water splashes.

In emergencies the pump should be switched off immediately. Disconnect the power cable from the power supply.

When using pump with aggressive chemicals observe the regulations concerning the transport and storage of aggressive fluids.

When installing always observe national regulations.

Manufacturer is not liable for any unauthorized use or misuse of this product that may cause injury, damage to persons or materials.

Pump must be accessible at all times for both operating and servicing. Access must not be obstructed in any way.

Feeder should be interlocked with a no-flow protection device.

Pump and accessories must be serviced and repaired by qualified and authorized personnel only.

Before any operation:
- **always read chemical Material Safety Data Sheet (MSDS);**
- **always wear protective clothing;**
- **always discharge the liquid end before servicing the pump.**
- **empty and rinse the liquid end before work on a pump which has been used with hazardous or unknown chemicals.**

This equipment requires regular maintenance to ensure potability requirements of the water and maintenance of improvements as declared by the manufaturer.

ENVIRONMENTAL SAFETY

Work area
Always keep the pump area clean to avoid and/or discover emissions.

Recycling guidelines

EWC code: 16 02 14

Always recycle according to these guidelines:
1. If the unit or parts are accepted by an authorized recycling company, then follow local recycling laws and regulations.
2. If the unit or parts are not accepted by an authorized recycling company, then return them to the nearest representative.

Waste and emissions regulations
Observe these safety regulations regarding waste and emissions:
- Dispose appropriately of all waste.
- Handle and dispose of the dosed chemical in compliance with applicable environmental regulations.
- Clean up all spills in accordance with safety and environmental procedures.
- Report all environmental emissions to the appropriate authorities.

LABELS

Fig. 1. Product label.

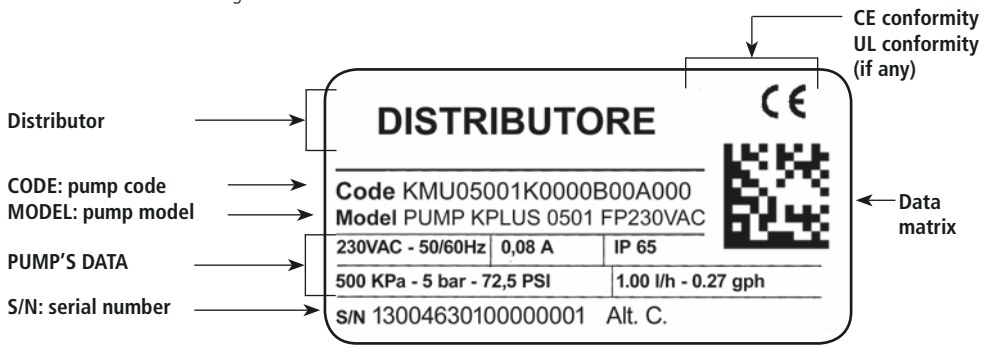

Spare parts

For spare parts orders or any other communication, refer to product label.
Code (CODE) and serial number (S / N) uniquely identify the pump.

1. Introduction

Introduction:
Metering Pumps "VMS" Series are the ideal solution for low / middle dosing of chemicals. All control and setup parameters are available through a digital keyboard and they are displayed on a LCD backlit display. Pump has "Level" input .

Pump's capacity

Flow rate is determined by the stroke length and by the stroke speed. The stroke length is adjustable from 0 to 100% using the stroke length adjustment knob. However dosing accuracy is guarantee within an adjustment range from 30% to 100%.

VMS	metering pumps with manual venting PVDF pump head
VMSA	metering pumps with self venting PVDF pump head
VMS PER	metering pump with peristaltic pump head

Modes:

Series	Mod.	Description
VMS - VMSA	PH	Proportional pump driven by internal built-in pH meter (0/14 pH) and level control. pH electrode input (electrode not included).
	RH	Proportional pump driven by internal built-in Redox (ORP) meter (0/1000mV) and level control.Redox electrode input (electrode not included).
	EN	Pump with weekly timer, microprocessor, digital controls, LCD display, level probe and electrovalve control.

Legend:

a. Alternating Current;

b. DC,

c. Protective Earth;

d. Standby;

e. Warning -

2. Unpacking

Included into package:

n.4	Dibbles ø6
n.4	Self tapping screws 4,5 x 40
n.1	Delayed fuse 5 X 20
n.1	Foot filter with valve
n.1	Injection valve
n.1	Level probe
m 2	Delivery pipe* (opaque PE)
m 2	Suction pipe * (transparent PVC)
m 2	Discharge pipe (transparent PVC)
n.1	This installation manual

* If hose is 6x8 there is only a 4meters long hose. Cut to obtain suction and delivery hoses.

Remove the contents from the box.

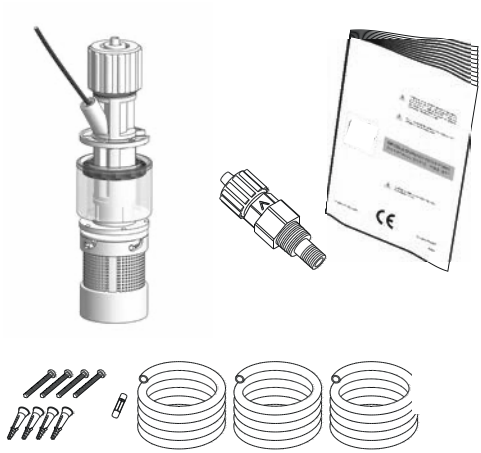

PLEASE DO NOT TRASH PACKAGING.
IT CAN BE USED TO RETURN THE PUMP.

3. Pump's description

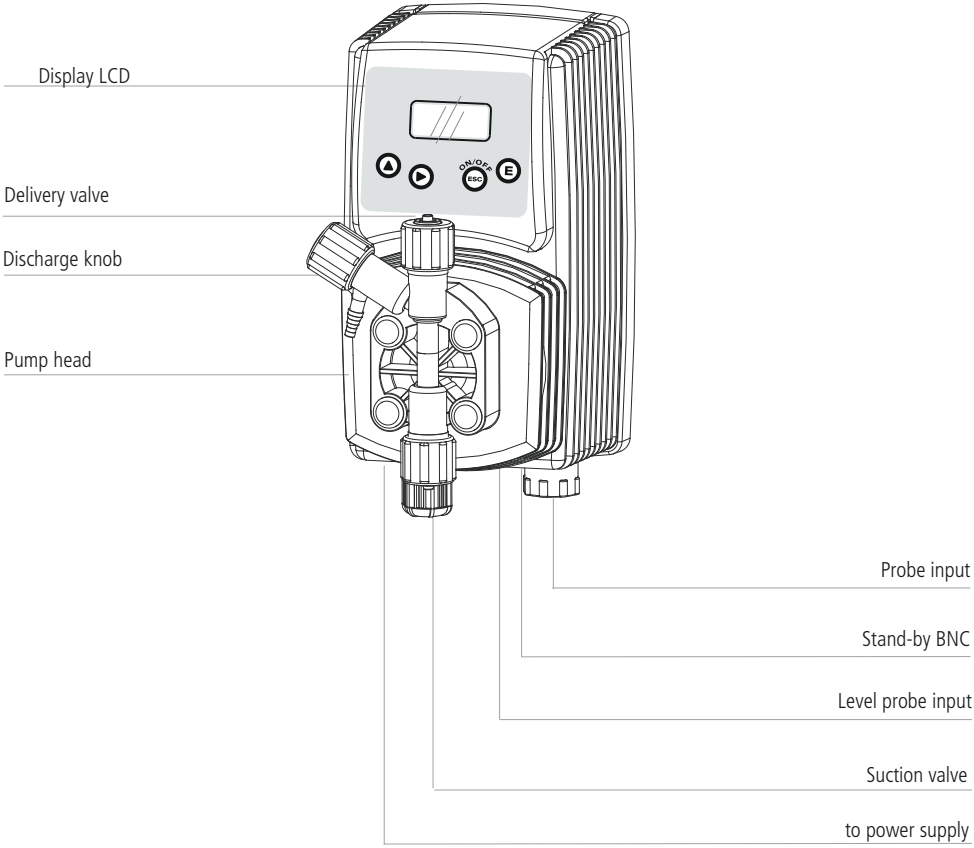

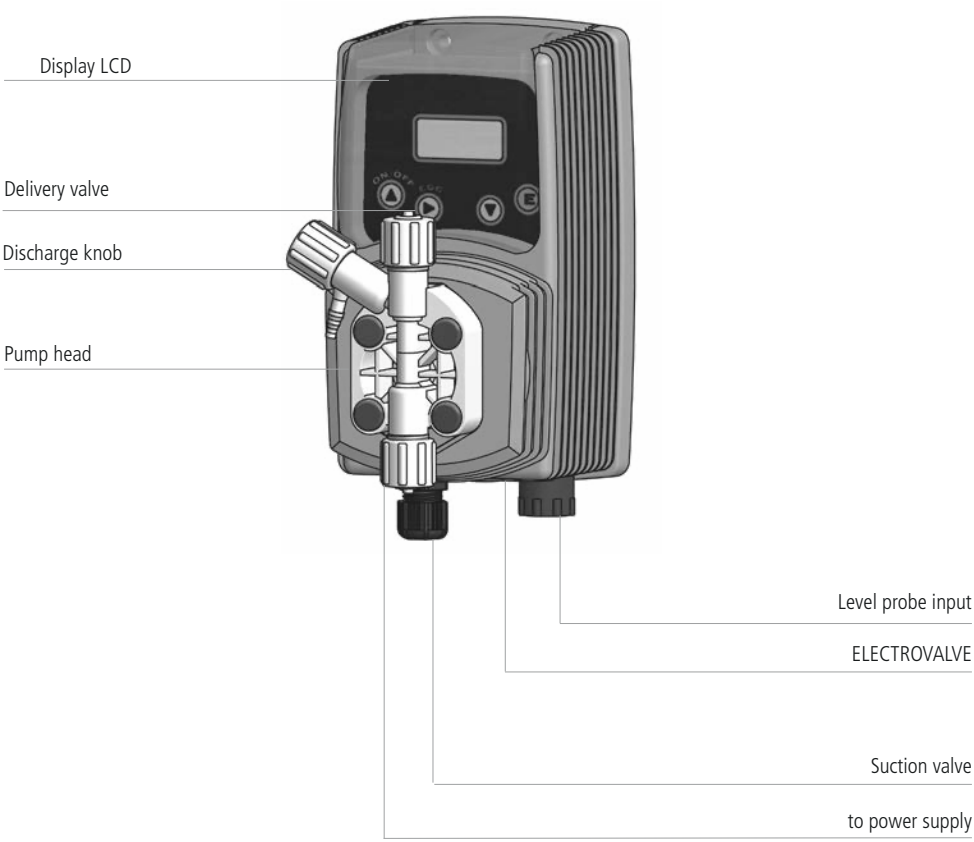
Display LCD
Delivery valve
Discharge knob
Pump head
Level probe input
ELECTROVALVE
Suction valve
to power supply

4. Before to Install warnings

Pump's installation and operativity is made in 4 main steps:

Pump's installation
Hydraulic Installation (hoses, level probe, injection valve)
Electrical Installation (main power connection, priming)
Programming the pump.

Before to start, please read carefully the following safety information.

Protective clothes

Wear always protective clothes as masks, gloves, safety glasses and further security devices during ALL installation procedure and while handling chemicals.

Installation location

Pump must be installed in a safety place and fixed to the table / wall to avoid vibration problems!

Pump must be installed in a easy accessible place!

Pump must be installed in horizontal position!

Avoid water splashes and direct sun!

Hoses and Valves

Suction and delivery hoses must be installed in vertical position!
All hoses connections must be performed using only hands' force!
No tongs required!

Delivery hose must be firmly fixed to avoid suddenly movements that could damage near objects!

Suction hose must be shorter as possible and installed in vertical position to avoid air bubbles suction!

Use only hoses compatibles with product to dose! See chemical compatibility table at page 30. If dosing product is not listed please consult full compatibility table or contact chemical's manufacturer!

Feeder should be interlocked with a no-flow protection device to automatically shut-off the pumps when there is no flow!

Adequate measures shall be taken to prevent cross connection of chemicals!

Chemical feeding must be stopped during backwash cycles and periods of noflow as these conditions may introduce the potential for chemical overdosing. Not doing so may result in elevated chemical concentrations and hazerdous gas introduction into the pool or spa.

5. Installation Draw

Pump must be installed in a wall support at a maximum height (**from tank's bottom**) of **1,5 meters**.

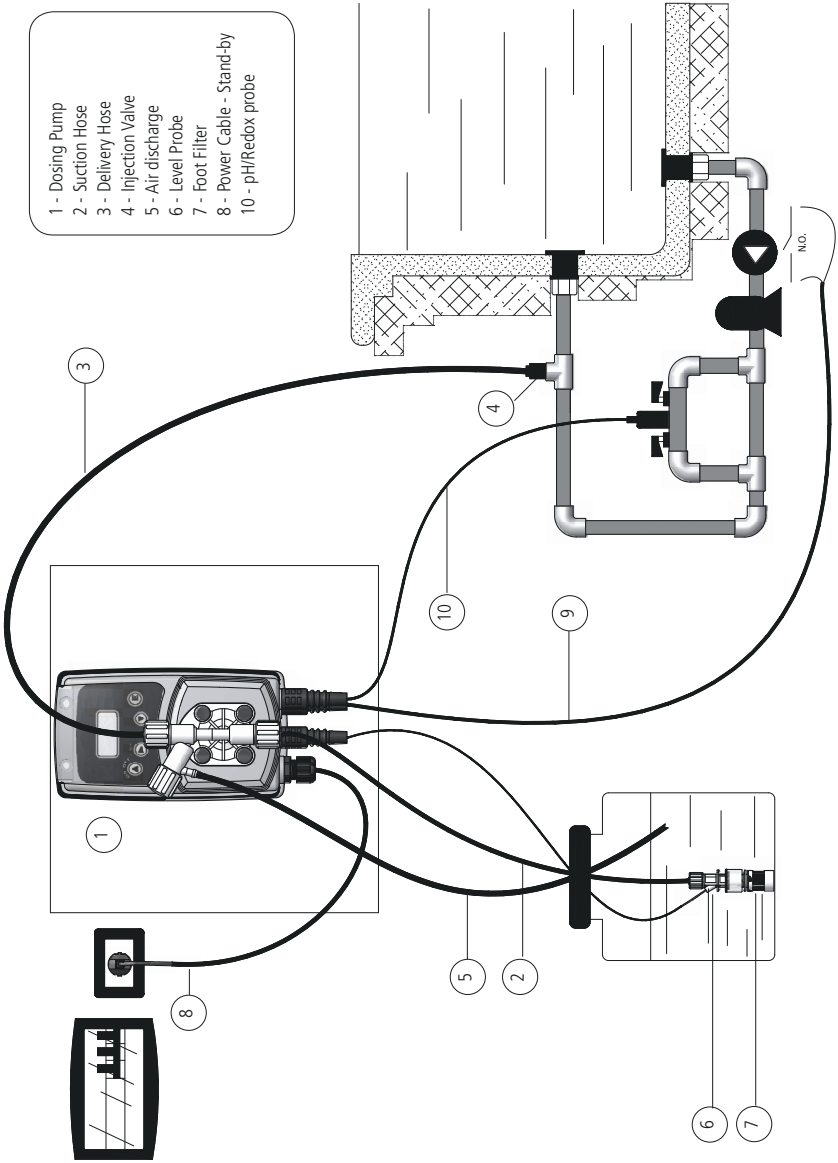

6. Hydraulic Installation

Hydraulic connections are:

Suction Hose with level probe and foot filter
Delivery Hose with injection valve
Discharge Hose

Suction Hose.

Completely unscrew tightening nut from pump's head and remove assembling components: tightening nut, holding ring and pipe holder.

Assembly as shown in fig. (A). Insert hose into pipe holder until it reaches the bottom.

Lock hose on pump's head by screwing down the tightening nut.
Use only hands to do it!

Connect other side of the hose to the foot filter using the same procedure.

fig. (A)

Assembling foot filter with level probe.

Level probe must be assembled with foot filter using the provided kit.
Foot valve is made to be installed into tank's bottom without sediments priming problem.

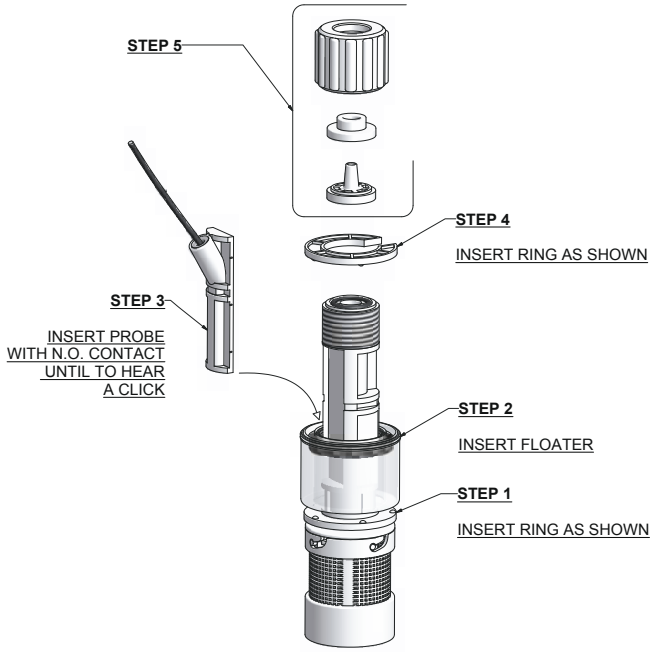

Connect BNC from level probe into pump's level input (front side of the pump).
Put level probe assembled with foot filter into tank's bottom.

Warning: If there is a mixer installed into tank, install a suction lance instead of level probe / foot filter.

Delivery Hose.

Completely unscrew tightening nut from pump's head and remove assembling components: tightening nut, holding ring and pipe holder.

Assembly as shown in fig. (A). Insert hose into pipe holder until it reaches the bottom.

Lock hose on pump's head by screwing down the tightening nut.
Use only hands to do it!

Connect other side of the hose to the injection valve using the same procedure.

Injection Valve.

Injection valve must be installed on plant from water's input.
Injection valve will open at pressure greater than 0,3bar.

Discharge hose.

Insert one side of discharge hose into discharge connector as shown in fig (C).

Insert other side of discharge hose into product's tank.
During priming procedure product exceeding will flow into tank.

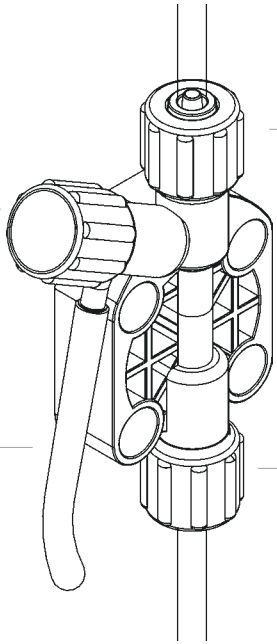

fig (C)

For priming procedure see page 14.

Self-venting pump head.

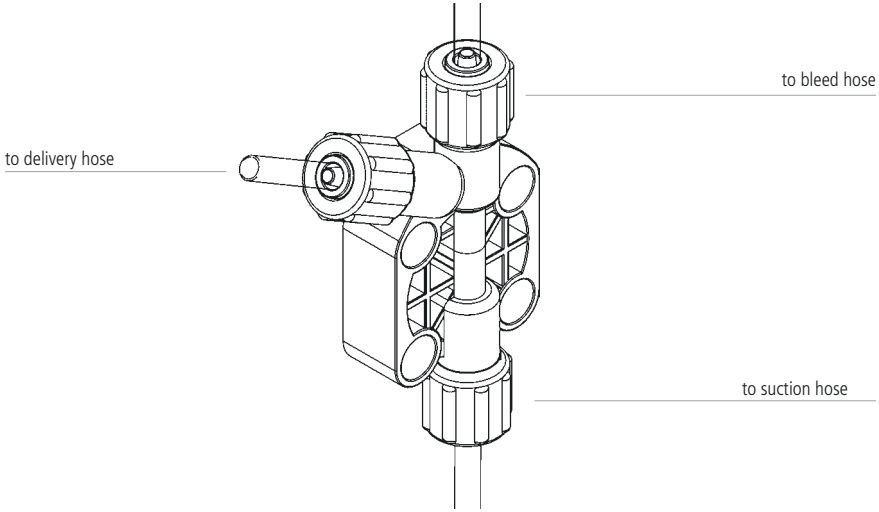

Self-venting pump head must be used when using chemicals that produce gas (i.e. hydrogen peroxide, ammonium, sodium hypoclorite at particular conditions).

Hoses assembling procedure (including purge hose) is described in fig. (A).

Notes:

- suction, delivery and purge valves are DIFFERENT! Do not exchange them!

- delivery and purge hoses are made of same material!

- it's allowed to lightly bend discharge hose!

- during calibration procedure ("TEST") insert discharge hose into BECKER test-tube!

Peristaltic pump head (2,2 l/h).

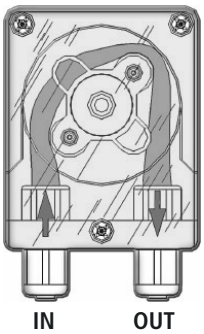

7. Electrical Installation

All electrical connections must be performed by **AUTHORIZED AND QUALIFIED** personnel only.
Before to proceed, please, verify the following steps:

- verify that pump's label values are compatible with main power supply.

- pump must be connected to a plant with a differential switch (0,03A sensitivity) if there isn't a good ground.

- to avoid damages to the pump do not install it in parallel with heavy inductance load (for example: engines). A relay switch must be used. See below picture.

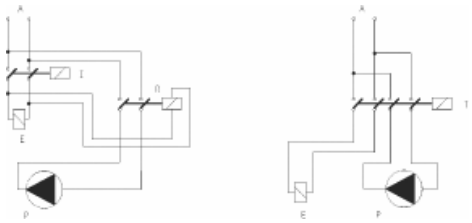

P - Dosing Pump
R - Relay
I - Switch or safety device
E - Electrovalve or inductance load
A - Main Power

WARNING
IF EQUIPMENT IS SUPPLIED WITH A PLUG:

If an appliance coupler or separable plug is used as the disconnecting device, it shall be readily identifiable and easily reached by the operator. For single-phase portable equipment, a plug on a cord of length not greater than 3m is considered to be easily reached.

WARNING
IF EQUIPMENT IS NOT SUPPLIED WITH A PLUG:

a) a switch or circuit-breaker shall be included in the building installation
b) it shall be in close proximity to the equipment and within easy reach of the operator
c) it shall be marked as the disconnetting device for the equipment

7. Electrical Installation

Once verified previous steps proceed as follows:

- check that "BNC" of level probe has been connected as described in "Hydraulic Installation" chapter.

- connect "BNC" and external signal to pump's "INPUT" connectors.

VMS PH/RH

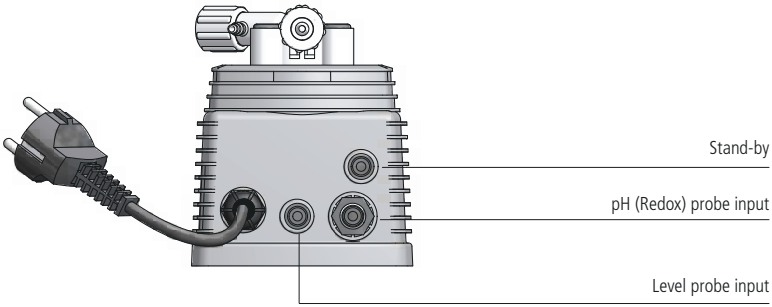

VMS EN

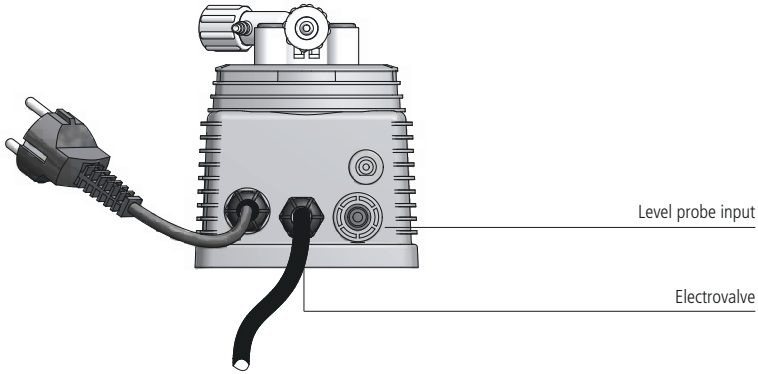

8. Basic Settings

All dosing pumps are equipped with a keyboard that basically works in the same way for any pump's model. To avoid any misunderstanding during this chapter all keys will be described as shown on this legend:

▲ **is the "UP", "ON/OFF" key**

▼ **is the "DOWN", "SCROLL" key**

▶ **is the "RIGHT", "ESC" key**

E **is the "E" key**

⚙ **is the "P" / "GEAR" key for settings**

PRIMING

To prime the pump without touching chemicals please performs these operations:

- connect all hoses into proper places (delivery hose, suction hose and outgassing hose).
- open outgassing valve and turn on the pump.
- set pump's single injection at 100% and pulses at 50%.

All air inside the pump head will exit through the outgassing outlet. When product will leak from it, close immediately the outgassing valve. If dosing product is particularly dense, to facilitate the priming, insert on vent pipe a syringe of 20 cc and suck inside.

9. Programming the "VMS PH" pump

PROGRAMMING "VMS PH" PUMP

Entering in program mode

Turn on the pump. Keep pressed **"E"** key for at least 4 seconds to enter in program mode. Pump's display shows:

fig.1

```
PASSWORD
->0000
```

Use **"UP"** and **"DOWN"** keys to edit the password, press **"RIGHT"** to move on next digit.

"SETUP" program

Once entered the password, pump's display shows:

fig.2

```
-> SETUP
PARAM
```

Move arrow on SETUP then press **"E"** key:

"SET POINT" program

fig.3

```
SETUP
1 POINT
```

Press **"E"** key:

fig.4

```
->00%
7.30 pH
```

The display shows that pump does not work at 00% if pH is 7.30. Make sure that arrow is on "7.30 pH" to change this value, then use **"UP"** and **"DOWN"** keys to enter a new value. Use **"RIGHT"** key to move on next value. Once on "00%", change it with **"UP"** and **"DOWN"** keys. It's possible to choose **"OFF"** instead of a number for "On/Off" working mode.

fig.5

```
->100%
7.80pH
```

The display shows that pump works when pH is 7.80. Make sure that arrow is on "7.80pH" to change this value, then use **"UP"** and **"DOWN"** keys to enter a new value. Use **"RIGHT"** to move on next value. Once on "100%", change it with **"UP"** and **"DOWN"** keys. Press **"E"** key to confirm values and quit from programming mode. Display shows for a few seconds: DATA SAVED. To exit from program mode press "RIGHT" key twice. Now the pump will modify proportionally its own dosing capacity in the range between 7.30pH and 7.80pH. On previous example, dosing mode is for "acid". It's possible to choose "ON" for "On/Off" working mode.

Probe calibration

To obtain a reliable measurement it is necessary (during installation) calibrate the probe. To do this, two buffer solutions are needed: a 7.00pH buffer solution and a 4.00pH or 9.00pH buffer solution. Proceed as follows:

1) Measure buffer solution temperature and verify if it is the same printed on solution's label.
2) Insert probe's connector (blue colour) into pump's input connector.
3) Remove protective cap from probe and wash it into water. Then dry it.

Into "Setup" menu (fig.3), choose "2)Calib" then press **"E"** key. The display shows:

fig.6

R:7.20pH
C:7.00pH

"R" means buffer solution reading value and "C" the calibration to refer to. During the calibration the "R" value could be different from the buffer solution value. Wait a stable reading in "R". Dip probe in a 7.00 pH buffer solution and use **"UP"** and **"DOWN"** keys to change the value in "C:" to have buffer solution value. Wait a stable reading in "R:" then press **"E"** key to confirm this first calibration. Pump will show:

fig.7

R:7.20pH
C:7.00pH

Remove the probe from first buffer solution and repeat the cleaning procedure. Then dip probe into second buffer solution (for example 4.00 pH) and use **"UP"** and **"DOWN"** keys to change the value in "C:" to have buffer solution value. Wait a stable reading in "R:" then press **"E"** key to confirm. The pump will show the new values for a while and will return to main menu.

fig.8

59 mV/pH
-000Mv

If calibration process fails the pump will show "PH CALIB FAILED". Not changing any value the program will return to "Calib" mode. To exit press "RIGHT" key twice.

DELAY

In main menu choose "PARAM" (fig.2) and press **"E"** key. Display shows:

fig.9

DEL:->00
0000

The -> arrow is on "DEL". This value is pump's waiting time after any start up procedure: pump will wait set time before start dosing every time it is powered on. Use **"UP"** and "**DOWN**" keys to change this value. Waiting time may be set from 1 to 60 minutes.

9. Programming the pump

PASSWORD

In main menu choose "PARAM" (fig.2) and press **"E"** key. Display shows:

fig.9

```
DEL:->00
 0000
```

Press **"RIGHT"** key to move on 0 0 0 0. All new pumps have "0 0 0 0" as default password, use **"UP"** and **"DOWN"** keys to change this value. Press **"E"** to confirm new data. The pump shows the new password for about two seconds then it'll return to main menu. Press **"RIGHT"** key to leave main menu.

MAXIMUM TIME DOSING ALARM

This alarm prevents the pump to dose if a set time is reached. To set this alarm enter into "Setup menu" as shown in fig.3. Use "DOWN" key to choose "3) Alarm" and press "E" key. The pump shows:

fig.10

```
-> AL OFF
 DOSING
```

To activate the alarm use "UP" or "DOWN" keys to set the time (from 1 to 100 minutes or "AL OFF"). To setup the alarm mode use the "RIGHT" key. Cursor moves on "DOSING". Use "UP" or "DOWN" keys to change this voice. On "STOP" mode the pump will stop the dosing procedure once the set time is reached. The pump's display will show the alarm condition and requires to press a key to continue. On "DOSING" mode the pump will NOT stop the dosing procedure once the set time is reached. The pump's display will show the alarm condition and requires to press a key to continue.

Special functions

- Keep pressed the **"UP"** key to turn off the pump. Display shows "OFF" and it will switch off. Keeping pressed the **"UP"** key the pump will switch on.

- Keep pressed the **"DOWN"** key to read on display the power supply input.

- Keep pressed the **"RIGHT"** key for manual dosing.

- Pump's reset: turn off the pump, keep pressed **"UP"** and **"DOWN"** keys then turn on the pump. Release **"UP"** and **"DOWN"** keys and proceed to pump's set-up. This procedure will return the pump to its shipment condition.

10. Programming the "VMS RH" pump

PROGRAMMING "VMS RH" PUMP

Turn on the pump. Keep pressed **"E"** key for at least 4 seconds to enter in program mode. Pump's display shows:

fig.1

```
password
->0000
```

Use **"UP"** and **"DOWN"** keys to edit the password, press **"RIGHT"** to move on next digit.

"SETUP" program

Once entered the password, pump's display shows:

fig.2

```
->setup
param
```

Move arrow on "SETUP" then press the **"E"** key:

"SET POINT" program

fig.3

```
setup
1 point
```

Press **"E"**, the display will show:

fig.4

```
->100%
650 mv
```

The pump works at 100% of its capacity if ORP value is 650mV. Make sure that arrow is on "650mV" to change it and then use **"UP"** and **"DOWN"** keys to enter a new value. Use **"RIGHT"** key to move on next digit. Move arrow on 100% and change using the **"UP"** and **"DOWN"** keys.

fig.5

```
->00%
700mv
```

The display shows that pump stops when ORP is 700mV. Make sure that arrow is on 700mV to change this value then use **"UP"** and **"DOWN"** keys to enter a new value. Use **"RIGHT"** key to move on next digit. Move arrow on 100% and change using the **"UP"** and **"DOWN"** keys. Press **"E"** key to confirm values and quit from programming mode. Display shows for a few seconds: DATA SAVED. Pump will change proportionally its dosing capacity between 650mV and 700mV. Now the pump will modify proportionally its own dosing capacity in range between 650mV and 700mV. In previous example pump will dose "chlorine".

Probe calibration

To obtain a reliable measurement it is necessary (during installation) calibrate the probe. To do this, a known buffer solutions is needed. Proceed as follows:
1) Measure buffer solution temperature and verify if it is the same printed on solution's label.
2) Insert probe's connector (blue color) into pump's input connector.
3) Remove protective cap from probe and wash it into water. Then dry it.
Into "Setup" menu (fig.3), choose "2)Calib" then press **"E"** key. The display shows:

fig,6

r:600mV
c:650mV

"R" means buffer solution reading value and "C" the calibration to refer to. During the calibration the "R" value could be different from the buffer solution value. Wait a stable reading in "R". Dip probe in a 650mV buffer solution and use **"UP"** and **"DOWN"** keys to change the value in "C": to have buffer solution value. Wait a stable reading in "R:" then press **"E"** key to confirm. Display shows probe's data before to return at main menu. If calibration process fails the pump will show "MV CALIB FAILED". Not changing any value the program will return to "Calib" mode. To exit press "RIGHT" key twice.

DELAY

In main menu choose "PARAM" (fig.2) and press **"E"** key. Display shows:

fig.9

del:->00
0000

The —> arrow is on "DEL". This value is pump's waiting time after any start up procedure: pump will wait set time before start dosing every time it is powered on. Use **"UP"** and "**DOWN**" keys to change this value. Waiting time may be set from 1 to 60 minutes.

PASSWORD

In main menu choose "PARAM" (fig.2) and press **"E"** key. Display shows:

DEL.: —>00
0 0 0 0

fig.9

del:->00
0000

Press **"RIGHT"** key to move on 0 0 0 0. All new pumps have "0 0 0 0" as default password, use **"UP"** and **"DOWN"** keys to change this value. Press **"E"** to confirm new data and "RIGHT" to exit from programming mode.

MAXIMUM TIME DOSING ALARM

This alarm prevents the pump to dose if a set time is reached. To set this alarm enter into "Setup menu" as shown in fig.3. Use "DOWN" key to choose "3) Alarm" and press "E" key. The pump shows:

fig.10

```
->al off
dosing
```

To activate the alarm use "UP" or "DOWN" keys to set the time (from 1 to 100 minutes or "AL OFF"). To setup the alarm mode use the "RIGHT" key. Cursor moves on "DOSING". Use "UP" or "DOWN" keys to change this voice. On "STOP" mode the pump will stop the dosing procedure once the set time is reached. The pump's display will show the alarm condition and requires to press a key to continue. On "DOSING" mode the pump will NOT stop the dosing procedure once the set time is reached. The pump's display will show the alarm condition and requires to press a key to continue.

Special functions

- Keep pressed the **"UP"** key to turn off the pump. Display shows "OFF" and it will switch off. Keeping pressed the **"UP"** key, the pump will switch on.

- Keep pressed the **"DOWN"** key to read on display the power supply input.

- Keep pressed the **"RIGHT"** key for manual dosing.

- Pump's reset: turn off the pump, keep pressed **"UP"** and **"DOWN"** keys then turn on the pump. Release **"UP"** and **"DOWN"** keys and proceed to pump's set up. This procedure will return the pump to its shipment condition.

11. Programming the pump

PROGRAMMING “VMS EN” PUMP ("P" key is the "gear" icon)

Turn “ON” the pump. Display shows:

< NEXT >

Tue10:57

This is the next dosing time. For example on Tuesday at 10:57 o’clock. Press the **“RIGHT”** key the display shows:

Cc/day

0.0

This is the product’s flow quantity for each day. Press the **“RIGHT”** key the display shows:

Total cc

624.6

Press the **“RIGHT”** key the display shows:

DATE Mon
24/07/00
Press the **“RIGHT”** key the display shows:

TIME
9:44:14

Press the **“RIGHT”** key again, the display will shows the initial picture.

HOW TO PROGRAM “VMS EN” ?

Keep pressed **“P”** key for at least 4 second. The display shows:

CODE
->0 0 0 0

This is the code (password) to enter into pump’s “programming mode”. Press **“RIGHT”** key to scroll through the numbers and insert the proper code. Default code is 0000. To confirm, press **“P”** key. The display shows:

-> Manual
Clock

Use **“UP”** (scroll up) and **“RIGHT”** keys (scroll down). Options are:

Manual
Clock
Progr.
Inject
Water
Code
LineVo
Exit

Manual option:

11. Programming the pump

To select "Manual" press **"P"** key (option is selected when **->** is on it). The display shows:

Cc
65.0

To start the pump keep pressed the **"UP"** key. The pump will begin to dose. The dosed quantity does not affect pump's "Total Counter". To stop the pump leave the **"UP"** key. To reset this counter press **"RIGHT"** key. To exit from "Manual" mode press **"P"** key.

Clock option:

The display shows date and time. Using **"UP"** (scroll) and **"RIGHT"** (change value) keys. Date's format is: DD/MM/YY. To confirm press **"P"** key.

Progr. Option:

To select "Progr." press **"P"** key (option is selected when the -> arrow is on it). The display shows:

1) 0:00
Mon Off
The 1) is the program 1 of 16. This pump can be set for a maximum of 16 daily programs.

0:00 is the starting time.

Mon is the dosing day. It is possible to scroll it and choose/add another day. An asterisk* means that dosing is activated for that day.

Off is program's status.

Using **"RIGHT"** key the display shows:

0000 cc
000 min

0000 cc is product's quantity to dose.
000 min is dosing time (minutes).

Example:

The pump must dose 400cc every Tuesday and Friday at 14:30.

In "Progr." Menu the display shows:

1) 0:00
Mon Off

Select the program's number using **"UP"** key. In this case leave it as appears but remember that it is possible to scroll through 16 programs. Press **"UP"** key and edit start time (0:00) using **"RIGHT"** key and enter 1 - 4 - 3 - 0 using **"UP"** key (the cursor blinks on selected value). Press **"RIGHT"** key until the cursor will blink on "Mon". Press **"UP"** key until the display shows "Tue". To enable this day press **"P"** key. An *asterisk confirm selected day. Press **"UP"** key until display shows "Tue". To enable

this day press **"P"** key. An *asterisk confirm selected day. Now press **"RIGHT"** key until the cursor blinks on "On". Leave as it is. To disable the current program 1 press the **"UP"** key. Press **"RIGHT"** key until display shows:

0000 cc
000 min

To change the cc value of each digit press **"UP"** key. To move the cursor to next digit or to "min" press **"RIGHT"** key. To change min value (minutes required for dosing) for each digit press **"UP"** key.
Move cursor to next digit with **"RIGHT"** key. **The "min" parameter must be calculated on pump's flow capacity.** For example: to dose 400cc using a pump with 0.9 cc/stroke (150 stroke/min), dosing time is about 3 minutes (150x0.9=135cc/min. 400/135=3 minutes). Once entered the values press **"P"** to confirm and save the program. It is possible to confirm/save the programmed mode during every program's step.
Important note: Do not set two programs with a common time's period during the same day. Doing this, pump will not accomplish last edited program.

Inject option:

The display shows:

Cc/imp
01.00

This value is set after a complete test of plant: flow, backpressure, product to dose, etc...

Water option:

The display shows:

B -> 04 sec
A 05 sec

"B" means "Before" (min:0 seconds ; max: 60 minutes); "A" means "After" (min:0 seconds; max: 60 minutes). Pump has a 220Vac output for a relay. This function is useful for opening an electrovalve before/after the dosing time. "B" means that output is activated 4 seconds before the program ends. "A" means that output is activated 5 seconds after the program ends. Use **"UP"** key to change selected value. If entered value is greater than 60 seconds the pump will change unit from seconds to minutes.

Code option:

The display shows:

Mod Code
->0 0 0 0

This is the code (password) for pump "programming mode". Press **"RIGHT"** key to scroll through the numbers and enter proper code. Default code is 0000. Press **"P"** key to enter.

LineVo option:

11. Programming the pump

Not editable. It shows (real-time) the power supply voltage according to pump's working range.

Exit option:

To exit from programming mode.

HOW TO RESET THE PUMP?

Unplug pump's power cable from supply and while pressing **"UP"** and **"RIGHT"** keys connect the pump's power cable. The display shows:

ERROR CK
MAKE SET
Press P
To reset

Press "**P"** key and pump will shows:

ERASE
EPROM

Remember that after pump's reset all programming values, inject value, date and time, etc have been deleted and must be entered again.

Note: if pump's internal battery is completely discharged (pump isn't powered for more than 6 months) please reinitialize clock to recover it.

12. Pump's messages

PUMP'S MESSAGES

During normal operating mode, the pump may show some messages.

Message: "LOW VOLT"
Description: The pump is low voltage powered. Check main power.

Message: "HIGH VOL"
Description: The pump is high voltage powered. Check main power.

Message: "LOW LEVEL"
Description: Product to dose is near to end. Verify the tank.

Message: "STAND-BY"
Description: The pump is waiting (a specified time) to become operative. See related chapter to set this function.
Description: The pump has a N.O. contact (see the picture on page 13). When the contact closes the pump stops and shows the stand-by message until the contact will be opened.

Problem	Possible Cause
Pump doesn't turn on.	Pump isn't powered. Connect it to main supply. Pump's protection fuse is broken. Replace it. See page 26 for replacement procedure. Pump's main board is broken. Replace it. See page 26 for replacement procedure.
Pump is not dosing and solenoid is operating.	The foot filter is obstructed. Clean it. Suction hose is empty. Pump must be primed. Repeat priming procedure. Air bubbles inside hydraulic circuit. Check valves - hoses - fittings. Product to dose is generating gas. Turn discharge knob and let air flow away. Use a self-venting pump head.
Pump is not dosing and solenoid isn't operating or slightly operating.	Crystals presence inside valves. Check them and try to dose 2-3 liters of normal water. Change valves. Injection valve obstructed. Change it.

14. Fuse and main board replacement

Fuse or main board replacement is allowed to qualified personnel only. Before to operate disconnect the pump from main power and all hydraulic connections.

For fuse replacement is necessary to use a 3x16 and 3x15 screwdriver and a new fuse (same model of old one).

For main board replacement is necessary to use a 3x16 and 3x15 screwdriver and a new main board (same model of old one).

Fuse replacement procedure:

- Remove 6 screws from pump's back.
- Pull pump's back cover until it's completed separated from pump's front.
- Locate the blown fuse and replace it.
- Reassemble the pump.
- Reinsert screws.

Main board replacement procedure:

- Remove 6 screws from pump's back.
- Pull pump's back cover until it's completed separated from pump's front.
- Remove board's screws.
- Completely disconnect wires from main board and replace it. Reinsert screws.
- Reconnect wires to the main board (see enclosed picture).
- Reassemble the pump.
- Reinsert screws.

VMS PH
VMS RH

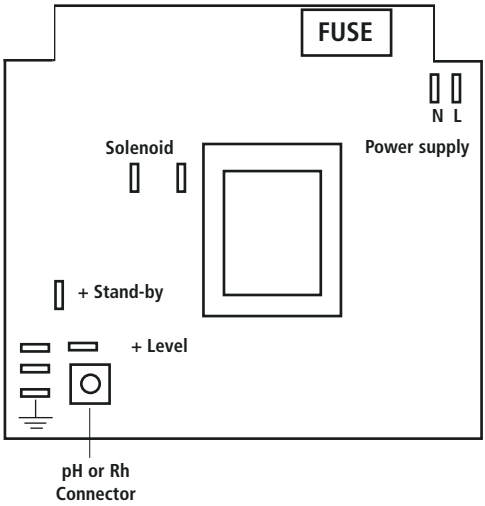

VMS EN

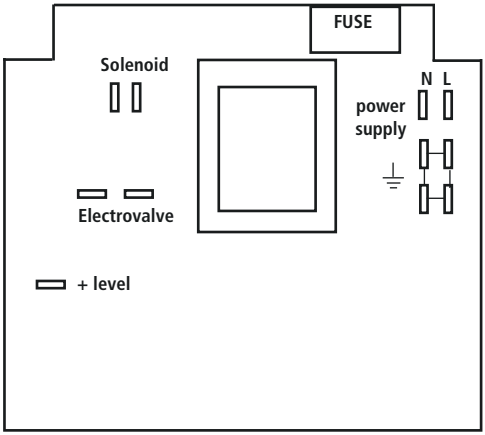

Maintenance schedule

In order to ensure the requirements of potable drinking water treated and the maintenance of the improvements as declared by the manufacturer, this equipment must be checked at least once a month.

OPERATOR PROTECTION
Use safety equipment according to the company regulations.
Use this safety equipment within the work area during installation, service and when handling chemicals:
- **protective mask**
- **protective gloves**
- **safety goggles**
- **ear plugs or hear muffs**
- **further security device, if necessary.**

POWER SUPPLY DISCONNECTION
Always disconnect power to the motor before you perform any installation or maintenance tasks. Failure to disconnect power will result in serious physical injury.

Installation and maintenance tasks should be carried out by AUTHORIZED AND QUALIFIED PERSONNEL only in accordance with local regulations.

Use original spare parts.

Maintenance inspection

Shutdown the dosing pump before any maintenance operation **Shutdown procedure.**

A maintenance schedule includes these types of inspections:
- Routine maintenance and inspections
- Three-month inspections
- Annual inspections

Shorten the inspection intervals appropriately if the pumped chemical is abrasive or corrosive.

Routine maitenance and inspections
Perform these tasks whenever you perform routine maintenance:
- Inspect the seal. Ensure that there are no leaks from the mechanical seal.
- Check electrical wiring
- Check for unusual noise and vibration (noise allowed 73 dbA; ± 5 dB).
- Check the pump and piping for leaks.
- Check for corrosion on parts of the pump and / or on hoses.

Three-month inspections
Perform these tasks every three months:
- Check that the tightenings.
- Check the mechanical seal if the pump has been left idle.

Annual inspections
Perform these inspections one time each year:
- Check the pump capacity (as per nameplate).
- Check the pump pressure (as per nameplate).
- Check the pump power (as per nameplate).

f the pump performance does not satisfy your process requirements, and the process requirements have not changed, then perform these steps:
1. Disassemble the pump.
2. Inspect it.
3. Replace worn parts.

Shutdown procedure

This procedure SHOULD BE CARRIED OUT BY AUTHORIZED AND QUALIFIED PERSONNEL

OPERATOR PROTECTION
Use safety equipment according to the company regulations.
Use this safety equipment within the work area during installation, service and when handling chemicals:
- **protective mask**
- **protective gloves**
- **safety goggles**
- **ear plugs or hear muffs**
- **further security device, if necessary.**

Shutdown the dosing pump **before any maintenance operation** or **before long downtimes**. Disconnect power and ensure it cannot be restarted.

Depressurize the system. The liquid may leak splashing.

Drain the chemical from pump head.
Release the pressure and disconnect the disharge pipe from the discharge valve.
Rinse the pump head and clean all valves.

TECHNICAL FEATURES

Power supply:	230 VAC (190/265 VAC) - 50/60 Hz
Power supply:	115 VAC (90/135 VAC) - 50/60 Hz
Power supply:	24 VAC (20/32 VAC) - 50/60 Hz
Power supply:	12 VDC (10/16 VDC)

Pump Strokes:	0 / 180
Suction Height:	1,5 metres
Environment Temperature:	0 / 45°C (32 / 113°F)
Chemical Temperature:	0 / 50°C (32 / 122°F)
Installation Class:	II
Pollution Level:	2
Audible Noise:	73dbA
Packaging and Transporting Temperature:	-10 / +50°C (14 / 122°F)
Protection degree:	IP 65 (IP54 if peristaltic pump)

MANUFACTURING MATERIALS

Case:	PPO
Pump head:	PVDF
Diaphragm:	PTFE
Balls:	CERAMIC, GLASS, PTFE, SS *
Suction Pipe	PVC
Delivery Pipe:	PE
Valve Body:	PVDF
O-ring:	FP, EP, WAX, SI, PTFE *
Injection connector	PP, PVDF (ceramic, HASTELLOY C276 spring)
Level Probe:	PP, PVDF *
Level probe cable:	PE
Foot Filter:	PP, PVDF *

* as ordered.

Model	FLOW			cc per STROKE	Maximum pressure	
	min cc/h	max l/h	Max GPH		bar	PSI
2001	0,1	1	0.26	0,1	20	290
1802	0,19	2	0.52	0,19	18	261
1804	0,37	4	1.05	0,37	18	261
1502	0,19	2	0.52	0,19	15	217
1504	0,37	4	1.05	0,37	15	217
1505	0,46	5	1.32	0,46	15	217
1004	0,37	4	1.05	0,37	10	145
1005	0,46	5	1.32	0,46	10	145
1010	0,93	10	2.64	0,93	10	145
0706	0,56	6	1.58	0,56	7	101
0510	0,93	10	2.64	0,93	5	72
0512	1,11	12	3.17	1,11	5	72
0501	0,1	1	0.26	0,1	5	72
0408	0,74	8	2.11	0,74	4	58
0310	0,93	10	2.64	0,93	3	43
0215	1.39	15	3.96	1.39	2	29
0116	1,48	16	4.22	1,48	1	14

Pump Head J

20 01

l/h 01

bar 20

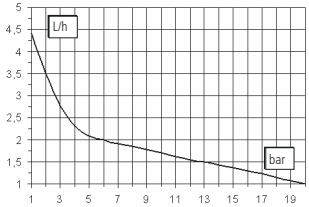

Pump Head K

18 04

l/h 04

bar 18

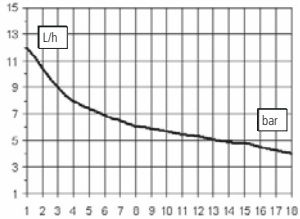

Pump Head K

18 02

l/h 02

bar 18

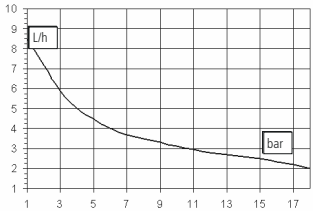

Pump Head K

15 04

l/h 04

bar 15

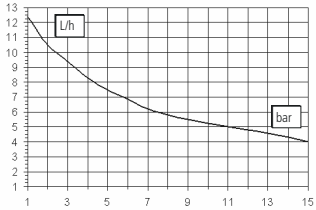

Pump Head K

15 02

l/h 02

bar 15

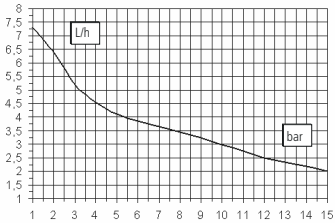

Pump Head K

10 10

l/h 10

bar 10

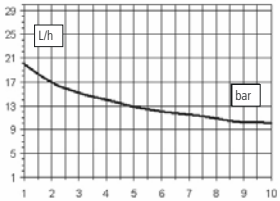

Pump Head K

10 05

l/h 05

bar 10

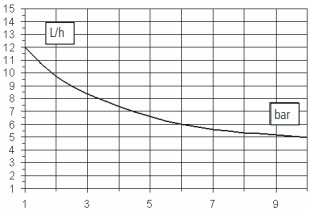

Pump Head K

10 04

l/h 04

bar 10

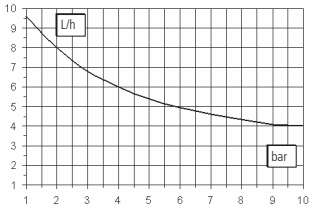

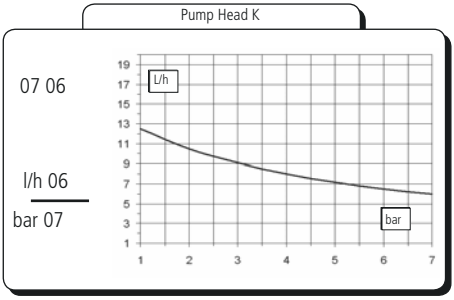

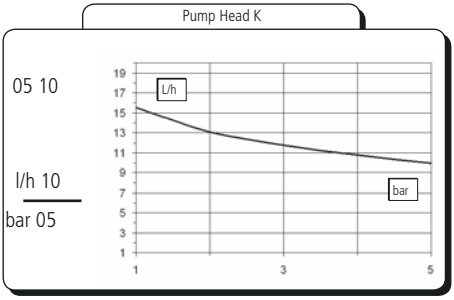

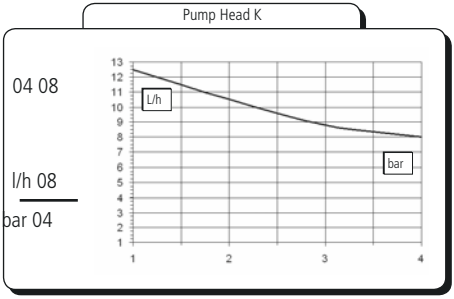

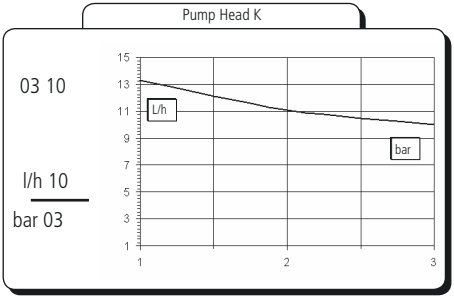

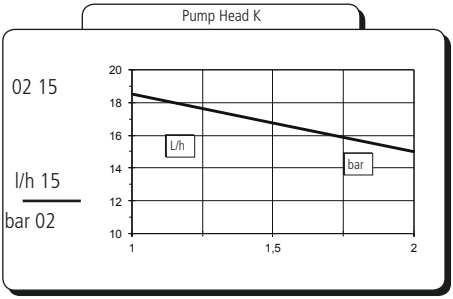

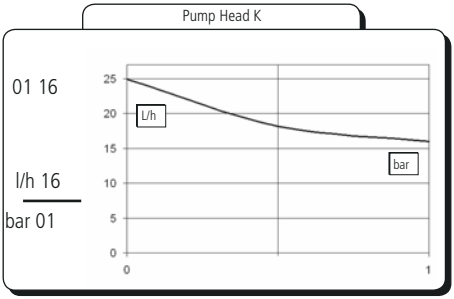

Flow rate indicated is for H_2O at 20°C at the rated pressure.
Dosing accuracy ± 2% at constant pressure ± 0,5 bar.

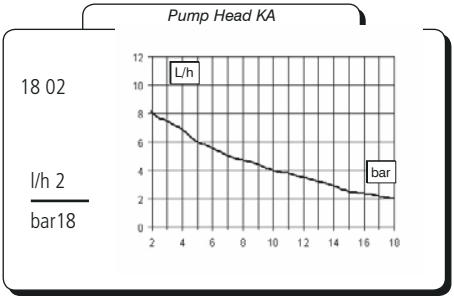
Pump Head KA
18 02
l/h 2
bar18
L/h
bar

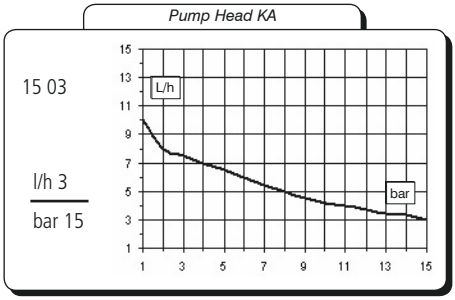
Pump Head KA
15 03
l/h 3
bar 15
L/h
bar

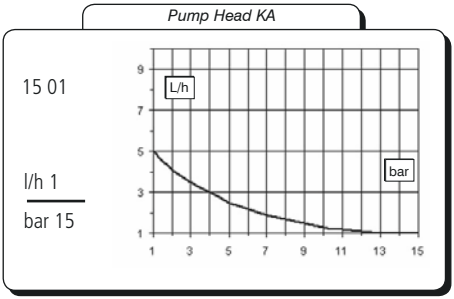
Pump Head KA
15 01
l/h 1
bar 15
L/h
bar

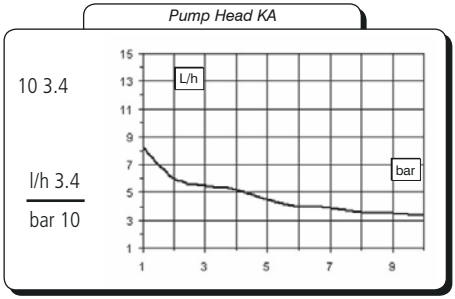
Pump Head KA
10 3.4
l/h 3.4
bar 10
L/h
bar

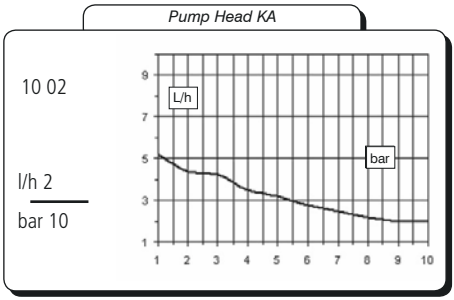
Pump Head KA
10 02
l/h 2
bar 10
L/h
bar

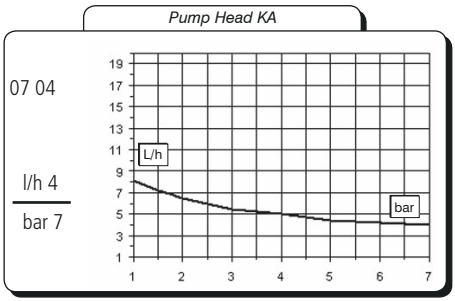
Pump Head KA
07 04
l/h 4
bar 7
L/h
bar

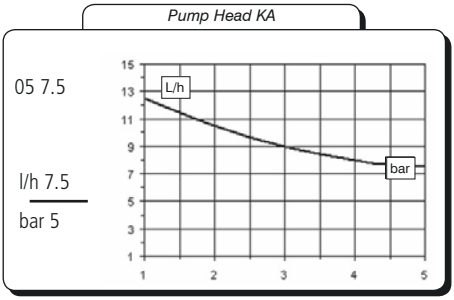
Pump Head KA
05 7.5
l/h 7.5
bar 5
L/h
bar

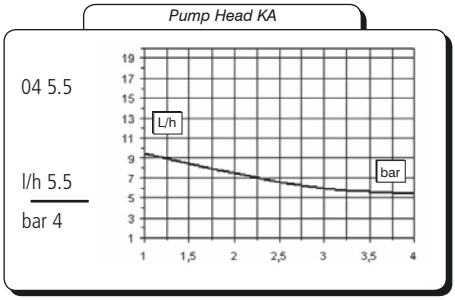
Pump Head KA
04 5.5
l/h 5.5
bar 4
L/h
bar

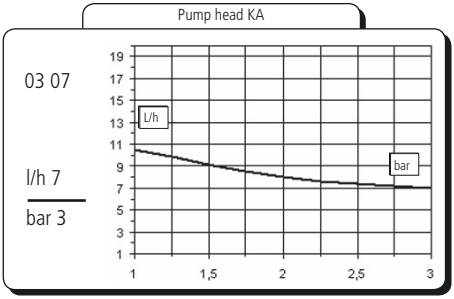

Flow rate indicated is for H_2O at 20°C at the rated pressure. Dosing accuracy ± 2% at constant pressure ± 0,5 bar.

D Appendix. Dimensions

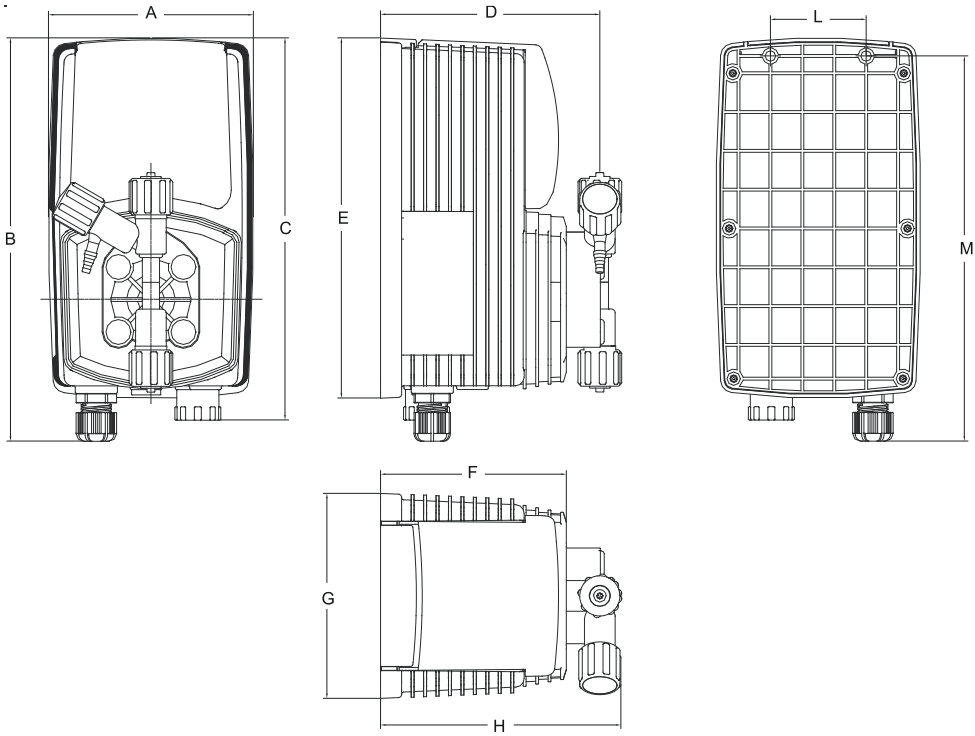

DIMENSIONS		
	mm	*inch*
A	106.96	4.21
B	210.44	8.28
C	199.44	7.85
D	114.50	4.50
E	187.96	7.40
F	97.00	3.81
G	106.96	4.21
H	125.47	4.93
L	50.00	1.96
M	201.00	7.91

E Appendix. Chemical Compatibility Table

Chemical compatibility table

Solenoid driven metering pumps are widely used to dose chemical fluids and it is important that the most suitable material in contact with fluid is selected for each application. This compatibility table serves as a useful help in this respect. All the informations in this list are verified periodically and believed to be correct on the date of issuance. All the informations in this list are based on manufacturer's data and its own experience but since the resistance of any material depends by several factors this list is supplied only as an initial guide, in no way manufacturer makes warranties of any matter respect to the informations provided in this list.

Tab. 1. Chemical compatibility table.

Product	Formula	Ceram.	PVDF	PP	PVC	SS 316	PMMA	Hastel.	PTFE	FPM	EPDM	NBR	PE
Acetic Acid, Max 75%	CH3COOH	2	1	1	1	1	3	1	1	3	1	3	1
Hydrochloric Acid, Concentrate	HCl	1	1	1	1	3	1	1	1	1	3	3	1
Hydrofluoric Acid 40%	H2F2	3	1	3	2	3	3	2	1	1	3	3	1
Phosphoric Acid, 50%	H3PO4	1	1	1	1	2	1	1	1	1	1	3	1
Nitric Acid, 65%	HNO3	1	1	2	3	2	3	1	1	1	3	3	2
Sulphuric Acid, 85%	H2SO4	1	1	1	1	2	3	1	1	1	3	3	1
Sulphuric Acid, 98.5%	H2SO4	1	1	3	3	3	3	1	1	1	3	3	3
Amines	R-NH2	1	2	1	3	1	-	1	1	3	3	1	1
Sodium Bisulphite	NaHSO3	1	1	1	1	2	1	1	1	1	1	1	1
Sodium Carbonate (Soda)	Na2CO3	2	1	1	1	1	1	1	1	2	1	1	1
Ferric Chloride	FeCl3	1	1	1	1	3	1	1	1	1	1	1	1
Calcium Hydroxide (Slaked Lime)	Ca(OH)2	1	1	1	1	1	1	1	1	1	1	1	1
Sodium Hydroxide (Caustic Soda)	NaOH	2	1	1	1	1	1	1	1	2	1	2	1
[1] Calcium Hypochlor.(Chlor. ted Lime)	Ca(OCl)2	1	1	1	1	3	1	1	1	1	1	3	1
Sodium Hypochlorite, 12.5%	NaOCl + NaCl	1	1	2	1	3	1	1	1	1	1	2	2
Potassium Permanganate, 10%	KMnO4	1	1	1	1	1	1	1	1	1	1	3	1
Hydrogen Peroxide, 30% (Perydrol)	H2O2	1	1	1	1	1	3	1	1	1	3	3	1
Aluminium Sulphate	Al2(SO4)3	1	1	1	1	1	1	1	1	1	1	1	1
Copper-II-Sulphate (Roman Vitriol)	CuSO4	1	1	1	1	1	1	1	1	1	1	1	1

[1] Calcium Hypochlor.(Chlor.ted Lime): WQA test was based on 1% Calcium Hypochlorite solution.

1 - Good resistance rating
2 - Fairly resistance rating
3- Not resistant

Materials

Polyvinyldene fluoride (PVDF) .....Pump heads, Valves, Fittings
Polypropylene (PP).....Pump heads, Valves, Fittings
PVC .....Pump heads
Stainless steel (SS 316).....Pump heads, Valves
Polymethyl Metacrilate Acrylic (PMMA) ...Pump heads
Polytetrafluoroethylene (PTFE) .....Diaphragm
Fluorocarbon (FPM).....O-ring
Ethylene propylene (EPDM).....O-ring
Nitrile (NBR).....O-ring

F Appendix. Hoses resistance table

Hose features are very important for a reliable dosage. Every pump's model is made to work in the best way using selected hoses according to pump's capacity / model. Information reported here are intended for standard use only. For extended information ask to hose's manufacturer.

Suction / Delivery Hose			
4x6 mm PVC (transparent)	4x8 mm PE (opaque)	6x8 mm PE (opaque)	8x12 mm PVC (transparent)

Delivery Hose	Working Pressure				Breaking Pressure			
4x6 mm PE 230 (opaque)	20°C 12 bar	30°C 10.5 bar	40°C 8.5 bar	50°C 6.2 bar	20°C 36 bar	30°C 31.5 bar	40°C 25.5 bar	50°C 18.5 bar
4x8 mm PE 230 (opaque)	20°C 19 bar	30°C 15.7 bar	40°C 12 bar	50°C 7.5 bar	20°C 57 bar	30°C 47 bar	40°C 36 bar	50°C 22.5 bar
6x8 mm PE 230 (opaque)	20°C 8.6 bar	30°C 6.8 bar	40°C 4.8 bar	50°C 2.3 bar	20°C 26 bar	30°C 20.5 bar	40°C 14.5 bar	50°C 7 bar
8x12 mm PE 230 (opaque)	20°C 12 bar	30°C 10.5 bar	40°C 8.5 bar	50°C 6.2 bar	20°C 36 bar	30°C 31.5 bar	40°C 25.5 bar	50°C 18.5 bar

4x6 mm PVDF Flex 2800 (opaque)	20°C 40 bar	30°C 34 bar	40°C 30 bar	50°C 27 bar	60°C 24.8 bar	80°C 20 bar	90°C 10 bar
6x8 mm PVDF Flex 2800 (opaque)	20°C 29 bar	30°C 25.5 bar	40°C 22 bar	50°C 20 bar	60°C 18 bar	80°C 14.5 bar	90°C 7.3 bar
8X10 mm PVDF Flex 2800 (opaque)	20°C 18 bar	30°C 15.5 bar	40°C 13.5 bar	50°C 12.5 bar	60°C 11.2 bar	80°C 9 bar	90°C 4.5 bar

¼ PE 230 (opaque)	20°C 17.6 bar
⅜ PE 230 (opaque)	20°C 10.6 bar
½ PE 230 (opaque)	20°C 10.6 bar

G Appendix. Exploded View

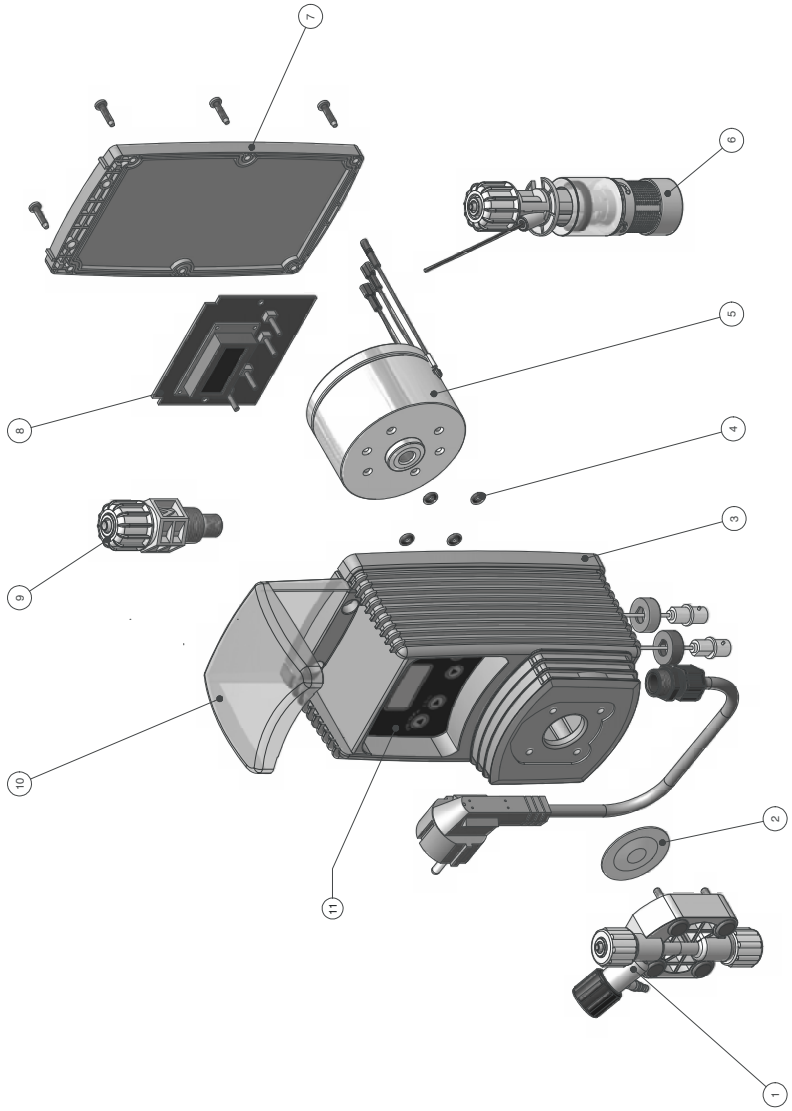

Notice: always specify the pump's label when ordering spare parts.

PRODUCT SERVICE REPAIR FORM

ENCLOSE THE PRESENT FORM TO THE DELIVERY NOTE

DATE .....

SENDER

Company name.....

Address .....

Phone no. .....

Contact person.....

PRODUCT TYPE (see product label)

DEVICE CODE .....

S/N (serial number).....

OPERATING CONDITIONS

Location/installation description .....

.....

Chemical .....

Start-up (date) ..... Running time (approx. hours).....

REMOVE ALL THE LIQUID INTO THE PUMP HEAD AND DRY IT BEFORE PACKAGING IN ITS ORIGINAL BOX.

DESCRIPTION OF PROBLEM

☐ MECHANICAL

- Wear parts.....
- Brekage/other damages .....
- Corrosion.....
- Other.....

☐ ELECTRICAL

- Connections, connector, cables .....
- Operating controls (keyboard, display, etc.) .....
- Elettronics.....
- Other.....

☐ LEAKS

- Connections.....
- Pump head .....

☐ NOT OR INADEQUATE FUNCTION/OTHER

.....

.....

.....

I declare that the dosing pump is free of any hazardous chemical.

Signature of the compiler

Company stamp

INDEX

GENERAL SAFETY GUIDELINES 2
PURPOSE OF USE AND SAFETY 3
ENVIRONMENTAL SAFETY 4
LABELS 4
SPARE PARTS 4

1. Introduction 5
2. Unpacking 6
3. Pump's description 7
4. Before to Install warnings 8
5. Installation Draw 9
6. Hydraulic Installation 10
7. Electrical Installation 14
8. Basic Settings 16
9. Programming the "VMS PH" pump 17
10. Programming the "VMS RH" pump 20
11. Programming the pump 23
12. Pump's messages 27
13. Troubleshooting 28
14. Fuse and main board replacement 29
15. Main Board 30
A Appendix. Maintenance 31
B Appendix. Construction Materials and Technical info 33
C Appendix. Delivery Curves 34
C Appendix. Self-Venting Delivery Curves 36
D Appendix. Dimensions 38
E Appendix. Chemical Compatibility Table 39
F Appendix. Hoses resistance table 40
G Appendix. Exploded View 41

PRECAUTIONS RELATING TO DIRECTIVES, REGULATIONS AND STANDARDS

§ CE/EU and UKCA marking

We guarantee that this product meets the essential requirements of the applicable Directives and Regulations based on the following specifications. Please carefully consider the following specifications for use of the product in European Union member countries and the United Kingdom.

• CE/EU harmonized directives and standards

Directives
DIRECTIVE 2006/42/EC
DIRECTIVE 2014/35/EU
DIRECTIVE 2014/30/EU
DIRECTIVE 2011/65/EU
DELEGATED DIRECTIVE (EU) 2015/863

Harmonized standards
EN ISO 12100
EN 809
EN ISO 20361
EN IEC 61326-1
EN 61010-1
EN IEC 63000

• UKCA harmonized regulations and standards

Regulations
2008 No. 1597
2008 2016 No. 1091
2016 No. 1101
2012 No. 3032

Harmonized standards
BS EN ISO 12100
BS EN 809
BS EN ISO 20361
BS EN IEC 61326-1
BS EN 61010-1
BS EN IEC 63000

Disposal of end-of-life equipment by users

This symbol warns you not to dispose of the product with normal waste. Respect human health and the environment by giving the discarded equipment to a designated collection center for the recycling of electronic and electrical equipment. For more information visit the online site.

When dismantling a pump please separate material types and send them according to local recycling disposal requirements. We appreciate your efforts in supporting your local Recycle Environmental Program. Working together we'll form an active union to assure the world's invaluable resources are conserved.