PRIUS P

Multifunction motor driven plunger metering pump

Data Sheet

Motor-driven plunger dosing pump, mechanical actuated, PRIUS combines efficiency and chemical resistance to a wide capacity range for an extensive number of applications.

- Multifunction plunger pump with inverter
- Working mode: Constant, ppm, %, mlq, pause-work, weekly, pulse, mA, Volt and Batch
- Level control
- Alarms
- Stand-by
- Double position of the electronic unit (standard or rotated mounting)
- **Ceramic or Stainless Steel plunger**
- Aluminium enclosure
- Flow regulation
- Double ball check valve
- Tropicalized three-phase motors

STANDARD MOUNTING ROTATED MOUNTING

The display has a four-color backlight that highlights: red color alarm, green color normal operation, yellow color attention, white color standby/off

Identification code

CIRCUIT	POWER SUPPLY		CUSTOM.	PACKAGING	INTERNAL
	F	230 VAC			
	1	115 VAC			

P	P	M	F	0	1	0	0	2	4	D	V	1	2	0	0	N	0	0	0

BAR L/H COLOR

CAPACITY	
50 Hz	
010024	24 l/h @ 10 bar
010013	13 l/h @ 10 bar
010010	10 l/h @ 10 bar
010005	5 l/h @ 10 bar
010080	80 l/h @ 10 bar
010043	43 l/h @ 10 bar
010032	32 l/h @ 10 bar
010016	16 l/h @ 10 bar
010130	130 l/h @ 10 bar
010070	70 l/h @ 10 bar
010052	52 l/h @ 10 bar
010026	26 l/h @ 10 bar
010210	210 l/h @ 10 bar
010113	113 l/h @ 10 bar
010084	84 l/h @ 10 bar
010042	42 l/h @ 10 bar
010320	320 l/h @ 10 bar
010172	172 l/h @ 10 bar
010128	128 l/h @ 10 bar
010064	64 l/h @ 10 bar

MATERIAL pump head + plunger	
D	PP + CERAMIC (SIALOX 96)
E	SS (AISI316L) + SS (AISI420)

	MOTOR
1	0,18Kw
2	0,37Kw

Insulation class F
IE energy efficiency 1

REDUCTION GEAR	
1	8:1
2	15:1
4	20:1

O RING	
V	FKM B
D	Dutral
W	WAX

LUBRICANT TYPE	
BRAND	MODEL
MOBIL	MOBILGEAR 632
SHELL	OMALA OIL 320
BP	ENERGOL GR-XP 320
IP	MELLANA OIL 320
ESSO	SPARTAN EP 320
AGIP	BLASIA 320

Via Donatori di Sangue, 1 - 02100 Rieti (Italy)
+39 074622841 | emecpumps.com

Specifications subject to change without notice | R2025

emec SIMPLE AS WATER

IQNET CERTIFIED MANAGEMENT SYSTEM
qualityaustria SYSTEM CERTIFIED
ISO 9001:2015 No.07728/0
ISO 14001:2015 No.00997/0
ISO 45001:2018 No.01121/0

PRIUS P

Data Sheet

Multifunction motor driven plunger metering pump

"PRIUS P MF" - 50 Hz / SINGLE-PHASE SUPPLY

FEATURES

- Multifunction plunger pump with inverter
- Power supply: 230 VAC (+/-10%) - 50/60 Hz - single-phase
- Ceramic (SIALOX96) plunger and PP pump head or SS (AISI420) pump head and plunger
- Double ball check valve
- Aluminium enclosure
- Flow regulation
- Double position of the electronic unit (standard or rotated mounting)
- Environment temperature: .....-10-40 °C (14-104 °F)
- Chemical temperature with SS pump head: .....-10-90 °C (14-194 °F)*
- Chemical temperature with PP pump head: .....-10-40 °C (14-104 °F)
- Installation class II
- Pollution level 2
- Audible noise.....78 dbA (± 5 dB)
- Protection degree .....IP 55
- Max suction height .....3 m
- Oil capacity.....0,3 lt (Refer to "Lubricant type" table)

* The specified temperature can be exceeded temporarily (max 15') for sterilization or flushing with hot water.

PRIUS P MF WITH PP PUMP HEAD AND CERAMIC PLUNGER

STANDARD MOUNTING

ROTATED MOUNTING

PRIUS P MF WITH SS PUMP HAED AND PLUNGER

STANDARD MOUNTING

ROTATED MOUNTING

Via Donatori di Sangue, 1 - 02100 Rieti (Italy)
+39 074622841 | emecpumps.com

Specifications subject to change without notice | R2025

emec SIMPLE AS WATER

IQNET CERTIFIED MANAGEMENT SYSTEM

qualityaustria SYSTEM CERTIFIED

ISO 9001:2015 No.07728/0
ISO 14001:2015 No.00997/0
ISO 45001:2018 No.01121/0

PRIUS P

Multifunction motor driven plunger metering pump

Data Sheet

PRIUS P MF WITH PP PUMP HEAD AND CERAMIC PLUNGER

PRIUS P MF								
stroke length	PLUNGER diam. (mm)	PRIUS P MF	Stroke/1'	Pressure bar	Capacity l/h	Motor	HOSES CONNECTION PP	INSTALLATION KIT
15 mm	14	**010024**	175	10	24	0,37 kW	G1/2" 12x18	A
		010013	94		13			
		010010	70		10			
		010005	35		5			
	25	**010080**	175	10	80	0,37 kW	G1/2" 12x18	A
		010043	94		43			
		010032	70		32			
		010016	35		16			
	32	**010130**	175	10	130	0,37 kW	G1/2" 12x18	A
		010070	94		70			
		010052	70		52			
		010026	35		26			
	40	**010210**	175	10	210	0,37 kW	G3/4" d.i. 18 mm	B
		010113	94		113			
		010084	70		84			
		010042	35		42			
	50	**010320**	175	10	320	0,37 kW	G3/4" d.i. 18 mm	B
		010172	94		172			
		010128	70		128			
		010064	35		64			

ACCESSORIES

A. INSTALLATION KIT INCLUDED
- 1/2" foot filter with 13 mm (int. diam.) hose fitting
- 3/4" injection valve
- 13 x16 PVDF or 12 X 18 PVC delivery hose
- 13 x16 PVDF or 12 X 18 PVC suction hose

B. INSTALLATION KIT (OPTION)
- 1 1/2"foot filter with 18 mm (int. diam.) hose fitting (G1 1/2" - 18 mm)
- 1 1/2" injection valve

Packaging of all models always includes:
- LEVEL PROBE
- INPUT / STANDBY CABLE
- ALARM CABLE

Via Donatori di Sangue, 1 - 02100 Rieti (Italy)
+39 074622841 | emecpumps.com

Specifications subject to change without notice | R2025

emec SIMPLE AS WATER

IQNET CERTIFIED MANAGEMENT SYSTEM
qualityaustria SYSTEM CERTIFIED
ISO 9001:2015 No.07728/0
ISO 14001:2015 No.00997/0
ISO 45001:2018 No.01121/0

PRIUS P

Data Sheet

Multifunction motor driven plunger metering pump

PRIUS P MF WITH SS PUMP HEAD AND PLUNGER

Stainless Steel pump does not fit installation kit.

PRIUS P MF							
stroke length	**PLUNGER diam. (mm)**	**PRIUS P MF**	**Stroke/1'**	**Pressure bar**	**Capacity l/h**	**Motor**	**HOSES CONNECTION SS**
15 mm	14	**010024**	175	10	24	0,37 kW	R1/2"
		010013	94		13		
		010010	70		10		
		010005	35		5		
	25	**010080**	175	10	80	0,37 kW	R1/2"
		010043	94		43		
		010032	70		32		
		010016	35		16		
	32	**010130**	175	10	130	0,37 kW	R1/2"
		010070	94		70		
		010052	70		52		
		010026	35		26		
	40	**010210**	175	10	210	0,37 kW	R3/4"
		010113	94		113		
		010084	70		84		
		010042	35		42		
	50	**010320**	175	10	320	0,37 kW	R3/4"
		010172	94		172		
		010128	70		128		
		010064	35		64		

Via Donatori di Sangue, 1 - 02100 Rieti (Italy)
+39 074622841 | emecpumps.com

Specifications subject to change without notice | R2025

emec SIMPLE AS WATER

IQNET CERTIFIED MANAGEMENT SYSTEM

qualityaustria SYSTEM CERTIFIED
ISO 9001:2015 No.07728/0
ISO 14001:2015 No.00997/0
ISO 45001:2018 No.01121/0

Dimensions

WEIGHTS AND DIMENSIONS ARE REFERRED TO MOTOR PUMPS WITH PP PUMP HEAD MOD.

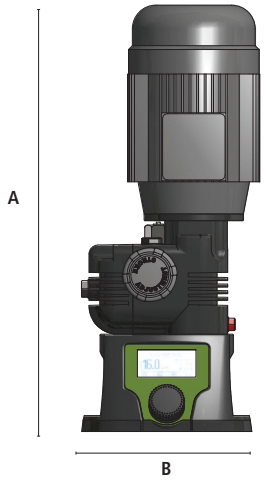

DIMENSIONS (mm)	
	UM pump (PP)
A	450
B	200
C	420
D	420
E	200
F	140
G	160
∅ fixing holes	8
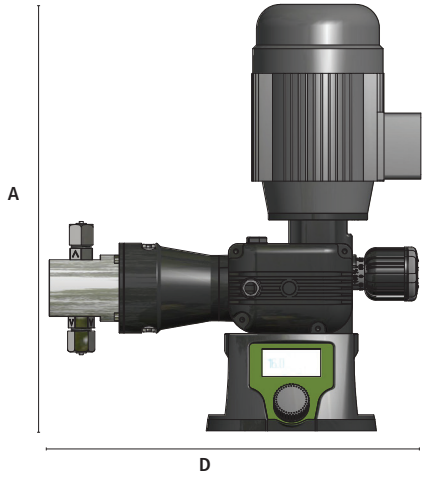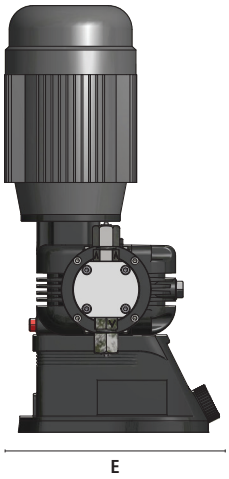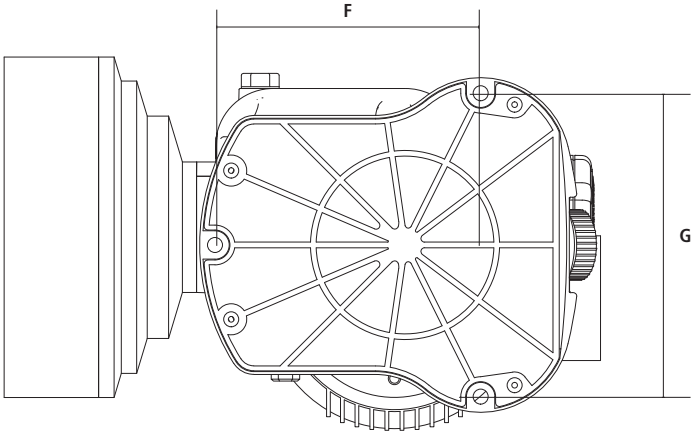
WEIGHT (kg)	
with PP pump head	16
with SS pump head	25