R990525

PRIUS D

PVDF PUMP HEAD

PP PUMP HEAD

SS PUMP HEAD

UMS PUMP HEAD

EN

OPERATING MANUAL

MOTOR DRIVEN DIAPHRAGM METERING PUMP

SPRING RETURN MECHANISM

04-02-21

THIS OPERATING INSTRUCTIONS CONTAINS SAFETY INFORMATION THAT IF IGNORED CAN ENDANGER LIFE OR RESULT IN SERIOUS INJURY.

READ THESE INSTRUCTIONS **CAREFULLY** BEFORE USE AND KEEP THEM FOR FUTURE REFERENCE. THE ORIGINAL INSTRUCTION IS IN ITALIAN. ALL NON-ITALIAN INSTRUCTIONS ARE TRANSLATIONS OF THE ORIGINAL INSTRUCTION.
INFORMATION AND SPECIFICATIONS ON THIS MANUAL COULD BE UNCORRECT OR COULD HAVE PRINTING ERRORS.
SPECIFICATIONS ARE SUBJECT TO CHANGE WITHOUT NOTICE.

Descrizione Prodotto *Product Description*	Pompa dosatrice a motore, serie PRIUS D *Motor-driven dosing pump, PRIUS D series*
Codici Identificativi Prodotto (i simboli "_" completano il codice del prodotto in base alla configurazione delle varianti) *Product Identification Codes* *(the "_" symbols complete the product code based on the configuration of the variants)*	**PD00** _ _ _ _ _ _ _ _ _ _ _ _ _ _ _ _

SUMMARY

GENERAL SAFETY GUIDELINES 4
1. DESCRIPTION 5
1.1 PRIUS Series 5
1.3 Features 8
1.3.1 Diaphragm 9
1.3 Dimensions 15
1.5 Delivery curves 16
2. INSTALLATION 20
2.1 Installation warning 20
2.2 Commissioning steps 21
2.2.1 Pump location 21
2.2.2 Oil filling 21
2.2.3 Piping connection 22
2.2.4 Pump head 22
2.2.5 Foot filter 22
2.2.6 Installation drawings 23
3. ELECTRICAL WIRING 24
3.1 Preliminary checks 24
3.2 Connection diagrams 24
4. START UP 24
4.1 Start up 26
5. PRIMING 25
5.1 How to prime the pump 27
6. MAINTENANCE 28
6.1 Maintenance schedule 28
6.2 Maintenance inspection 28
6.3 Shutdown 29
7. TROUBLESHOOTING 30
7.1 Repair service 30
8. COMPATIBILITY TABLE 31
8.1 Chemical compatibility table 31
8.2 Materials 31
9. **PRIUS WITH UMS PUMP HEAD** 32

GENERAL SAFETY GUIDELINES

Operating, installing, or maintaining the unit in any way that is not covered in this manual could cause death, serious personal injury, or damage to the equipment.

ICON

This manual use the following safety message icon:

Danger!
Indicates a hazardous situation which, if not avoided, will result in death or serious injury.

Warning!
Indicates a hazardous situation which, if not avoided, could result in death or serious injury

Important - A practice not related to personal injury or additional information.

METERING PUMP IS INTENDED FOR CHEMICAL DOSING.

Use of this pump with radioactive chemicals is forbidden!

Keep the pump protected from sun and water. Avoid water splashes.

In emergencies the pump should be switched off immediately! Disconnect the power cable from the power supply!

When using pump with aggressive chemicals observe the regulations concerning the transport and storage of aggressive fluids!

When installing always observe national regulations!

Manufacturer is not liable for any unauthorized use or misuse of this product that may cause injury, damage to persons or materials.

Pump must be accessible at all times for both operating and servicing. Access must not be obstructed in any way!

Feeder should be interlocked with a no-flow protection device.

Pump and accessories must be serviced and repaired by qualified and authorized personnel only!

Before any operation:
- **always read chemical Material Safety Data Sheet (MSDS);**
- **always wear protective clothing;**
- **always discharge the liquid end before servicing the pump!**
- **empty and rinse the liquid end before work on a pump which has been used with hazardous or unknown chemicals!**

1. DESCRIPTION

1.1 PRIUS Series

PRIUS series is a motor-driven diaphragm series pumps with spring return mechanism.
The mechanical diaphragm produces the flow thanks to the suction and delivery valves on the pump head
PRIUS is a constant dosing pump.
Flow rate is determined by the stroke length. The stroke length is adjustable from 0 to 100% using the stroke length adjustment knob.

Some functions described into this manual may need accessories not included into the pump packaging.

PLEASE DO NOT TRASH PACKAGING. IT CAN BE USED TO RETURN THE PUMP.

Single-phase motors with intermittent duty are not suitable for continuous operation. Duty cycles and rest periods must comply with the service type stated on the nameplate and in the motor manufacturer's documentation. Exceeding duty limits may cause overheating and motor damage. Reference duty cycle: S3 75% in accordance with IEC 60034-1, valid for ambient temperatures ≤ 40 °C.

Fig. 1. PRIUS pump

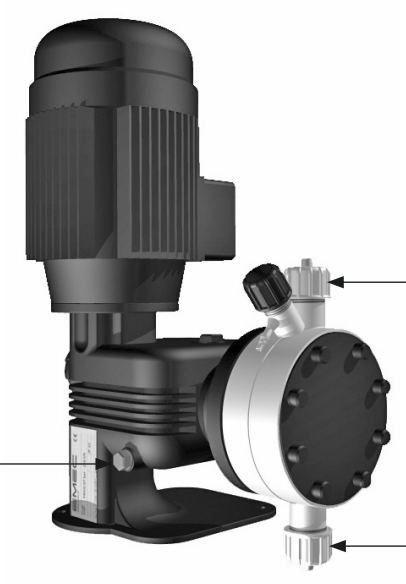

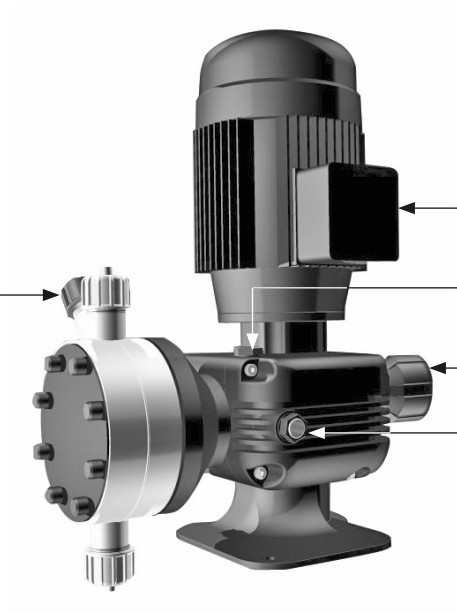

1.3 Features

Power supply..... 220-240/380-420 V - 50 Hz 3-PHASE
..... 220/380 V - 60 Hz 3-PHASE
..... 440/480 V - 60HZ 3-PHASE
..... 220-240 V - 50 Hz SINGLE-PHASE
Aluminium enclosure
Spring return mechanism
Environment temperature: -10 - 40°C (14 - 104°F)
Chemical temperature with PVDF pump head: -10 - 65°C (14 - 149°F)*
Chemical temperature with SS pump head: -10 - 90°C (14 - 194°F)*
Chemical temperature with PP pump head: -10 - 40°C (14 - 104°F)
Installation class II
Audible noise.....78 dbA (± 5 dB)
Protection degree.....IP 55
Max suction height.....3 m
Oil capacity.....0,3 lt (Refer to "Lubricant type" table)

* The specified temperature can be exceeded temporarily (max 15') for sterilization or flushing with hot water.

Tab. 1. Diaphragm replacement

LIQUID ENDS				
CODE	Pump head	O-ring	Valve	Chemical temperature
			Balls	
K	PVDF	FKM B or EPDM	Ceramic	0-65°C (32-149°F)
S	SS	FKM B or EPDM	Stainless steel	0-90°C (32-164°F)
P	PP	FKM B or EPDM	Ceramic	0-40°C (32-104°F)

1.3.1 Diaphragm

To prevent damages due to diaphragm rupture, replace the diaphragm according to the use as on the table below.

SUGGESTED REPLACEMENT FOR 24H WORKING PUMP	
PTFE	10.000 operating hours (24h)

Tab. 2. Reduction factor for different site altitudes.

Site altitude above sea level	Site altitude above sea level coolant temperature		
m	<30 °C	30 °C ... 40 °C	45 °C
1000	1,07	1	0,96
1500	1,04	0,97	0,93
2000	1	0,94	0,9
2500	0,96	0,9	0,86
3000	0,92	0,86	0,82
3500	0,88	0,82	0,79
4500	0,82	0,77	0,74

1.3 Dimensions

Fig. 2. Pump dimension

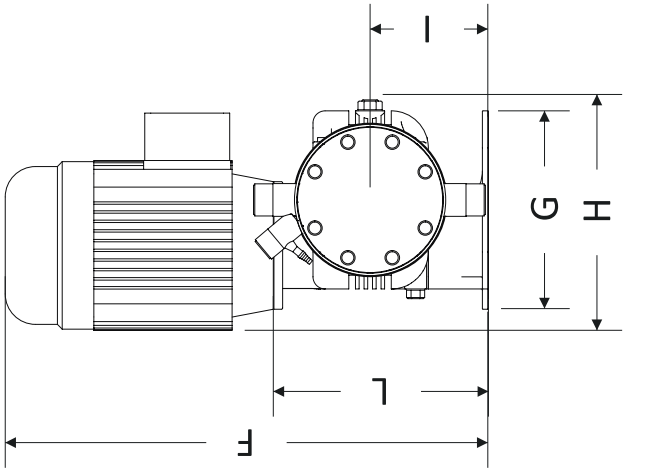

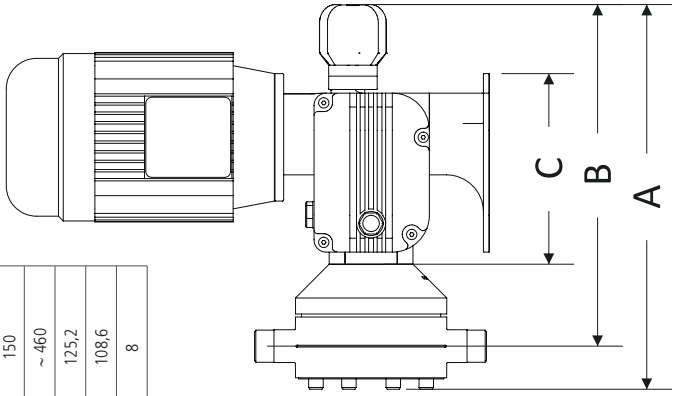

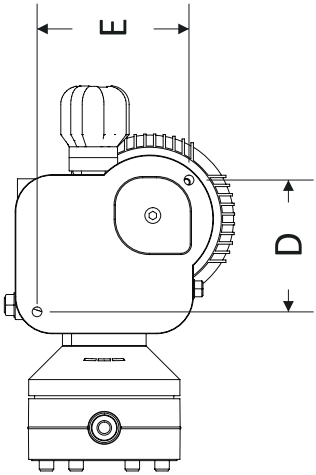

DIMENSIONS (mm)			
	NM pump head (PVDF)	TM pump head (PVDF)	UM pump head (PP)
A	~ 320	~ 330	~ 350
B	~ 280	~ 315	~ 320
C	157	157	157
L	177	220	300
G	163	163	180
H	~ 190	~ 190	~ 190
I	97,5	110	150
F	~ 400	~ 460	~ 460
E	125,2	125,2	125,2
D	108,6	108,6	108,6
∅ fixing holes	8	8	8

PRIUS D 50Hz Series | STANDARD

PRIUS D 50Hz THREE-PHASE

bar	l/h	Pump Head				Motor	PVDF	Installation Kit
		model	stroke (mm)	SPM	reduction	kW	hoses connection	
10	60	NM	3	175	8:1	0,18	G 1/2" 13 mm (i.d.)	A
10	30	NM	3	94	15:1	0,18	G 1/2" 13 mm (i.d.)	A
10	24	NM	3	70	20:1	0,18	G 1/2" 13 mm (i.d.)	A
10	12	NM	3	35	40:1	0,18	G 1/2" 13 mm (i.d.)	A
10	16	NM	4	35	40:1	0,18	G 1/2" 13 mm (i.d.)	A
10	105	TM	3	175	8:1	0,37	G 3/4" 13 mm (i.d.)	A
10	56	TM	3	94	15:1	0,37	G 3/4" 13 mm (i.d.)	A
10	42	TM	3	70	20:1	0,37	G 3/4" 13 mm (i.d.)	A
10	21	TM	3	35	40:1	0,37	G 3/4" 13 mm (i.d.)	A
7	160	TM	4	175	8:1	0,37	G 3/4" 13 mm (i.d.)	A
7	86	TM	4	94	15:1	0,37	G 3/4" 13 mm (i.d.)	A
7	64	TM	4	70	20:1	0,37	G 3/4" 13 mm (i.d.)	A
7	32	TM	4	35	40:1	0,37	G 3/4" 13 mm (i.d.)	A
5	240	TM	6	175	8:1	0,37	G 3/4" 18 mm (i.d.)	B
5	128	TM	6	94	15:1	0,37	G 3/4" 18 mm (i.d.)	B
5	96	TM	6	70	20:1	0,37	G 3/4" 18 mm (i.d.)	B
5	48	TM	6	35	40:1	0,37	G 3/4" 18 mm (i.d.)	B
2	1000	UMS	10	175	8:1	0,37	G 1 1/2" 30 mm (i.d.)	C
5	1000	UMS	10	175	8:1	0,55	G 1 1/2" 30 mm (i.d.)	C
5	520	UMS	10	94	15:1	0,37	G 1 1/2" 30 mm (i.d.)	C
4	520	UMS	10	94	15:1	0,37	G 1 1/2" 30 mm (i.d.)	C
5	390	UMS	10	70	20:1	0,37	G 1 1/2" 30 mm (i.d.)	C
5	180	UMS	10	35	40:1	0,37	G 1 1/2" 30 mm (i.d.)	C
5	350	UMS	4	175	8:1	0,37	G 1 1/2" 30 mm (i.d.)	C
5	188	UMS	4	94	15:1	0,37	G 1 1/2" 30 mm (i.d.)	C
5	140	UMS	4	70	20:1	0,37	G 1 1/2" 30 mm (i.d.)	C
5	70	UMS	4	35	40:1	0,37	G 1 1/2" 30 mm (i.d.)	C
5	440	UMS	5	175	8:1	0,37	G 1 1/2" 30 mm (i.d.)	C
5	236	UMS	5	94	15:1	0,37	G 1 1/2" 30 mm (i.d.)	C
5	176	UMS	5	70	20:1	0,37	G 1 1/2" 30 mm (i.d.)	C
5	88	UMS	5	35	40:1	0,37	G 1 1/2" 30 mm (i.d.)	C
5	530	UMS	6	175	8:1	0,37	G 1 1/2" 30 mm (i.d.)	C
5	284	UMS	6	94	15:1	0,37	G 1 1/2" 30 mm (i.d.)	C
5	212	UMS	6	70	20:1	0,37	G 1 1/2" 30 mm (i.d.)	C
5	106	UMS	6	35	40:1	0,37	G 1 1/2" 30 mm (i.d.)	C
3	750	UMS	8	175	8:1	0,37	G 1 1/2" 30 mm (i.d.)	C
5	750	UMS	8	175	8:1	0,55	G 1 1/2" 30 mm (i.d.)	C
5	380	UMS	8	94	15:1	0,37	G 1 1/2" 30 mm (i.d.)	C
5	290	UMS	8	70	20:1	0,37	G 1 1/2" 30 mm (i.d.)	C
5	141	UMS	8	35	40:1	0,37	G 1 1/2" 30 mm (i.d.)	C

PRIUS D 50Hz Series | STANDARD

PRIUS D 50Hz THREE-PHASE

bar	l/h	Pump Head				Motor	AISI 316L	Installation Kit
		model	stroke (mm)	SPM	reduction	kW	hoses connection	
10	60	NM	3	175	8:1	0,18	R 1/2″	A
10	30	NM	3	94	15:1	0,18	R 1/2″	A
10	24	NM	3	70	20:1	0,18	R 1/2″	A
10	12	NM	3	35	40:1	0,18	R 1/2″	A
10	16	NM	4	35	40:1	0,18	R 1/2″	A
10	105	TM	3	175	8:1	0,37	R 3/4″	A
10	56	TM	3	94	15:1	0,37	R 3/4″	A
10	42	TM	3	70	20:1	0,37	R 3/4″	A
10	21	TM	3	35	40:1	0,37	R 3/4″	A
7	160	TM	4	175	8:1	0,37	R 3/4″	A
7	86	TM	4	94	15:1	0,37	R 3/4″	A
7	64	TM	4	70	20:1	0,37	R 3/4″	A
7	32	TM	4	35	40:1	0,37	R 3/4″	A
5	240	TM	6	175	8:1	0,37	R 3/4″	B
5	128	TM	6	94	15:1	0,37	R 3/4″	B
5	96	TM	6	70	20:1	0,37	R 3/4″	B
5	48	TM	6	35	40:1	0,37	R 3/4″	B
2	1000	UMS	10	175	8:1	0,37	R 1″	C
5	1000	UMS	10	175	8:1	0,55	R 1″	C
5	520	UMS	10	94	15:1	0,37	R 1″	C
4	520	UMS	10	94	15:1	0,37	R 1″	C
5	390	UMS	10	70	20:1	0,37	R 1″	C
5	180	UMS	10	35	40:1	0,37	R 1″	C
5	350	UMS	4	175	8:1	0,37	R 1″	C
5	188	UMS	4	94	15:1	0,37	R 1″	C
5	140	UMS	4	70	20:1	0,37	R 1″	C
5	70	UMS	4	35	40:1	0,37	R 1″	C
5	440	UMS	5	175	8:1	0,37	R 1″	C
5	236	UMS	5	94	15:1	0,37	R 1″	C
5	176	UMS	5	70	20:1	0,37	R 1″	C
5	88	UMS	5	35	40:1	0,37	R 1″	C
5	530	UMS	6	175	8:1	0,37	R 1″	C
5	284	UMS	6	94	15:1	0,37	R 1″	C
5	212	UMS	6	70	20:1	0,37	R 1″	C
5	106	UMS	6	35	40:1	0,37	R 1″	C
3	750	UMS	8	175	8:1	0,37	R 1″	C
5	750	UMS	8	175	8:1	0,55	R 1″	C
5	380	UMS	8	94	15:1	0,37	R 1″	C
5	290	UMS	8	70	20:1	0,37	R 1″	C
5	141	UMS	8	35	40:1	0,37	R 1″	C

PRIUS D 50Hz Series | STANDARD

PRIUS D 50Hz THREE-PHASE

bar	l/h	Pump Head				Motor	PP	Installation Kit
		model	stroke (mm)	SPM	reduction	kW	hoses connection	
10	60	NM	3	175	8:1	0,18	G 1/2" 13 mm (i.d.)	A
10	30	NM	3	94	15:1	0,18	G 1/2" 13 mm (i.d.)	A
10	24	NM	3	70	20:1	0,18	G 1/2" 13 mm (i.d.)	A
10	12	NM	3	35	40:1	0,18	G 1/2" 13 mm (i.d.)	A
10	16	NM	4	35	40:1	0,18	G 1/2" 13 mm (i.d.)	A
10	105	TM	3	175	8:1	0,37	G 3/4" 13 mm (i.d.)	A
10	56	TM	3	94	15:1	0,37	G 3/4" 13 mm (i.d.)	A
10	42	TM	3	70	20:1	0,37	G 3/4" 13 mm (i.d.)	A
10	21	TM	3	35	40:1	0,37	G 3/4" 13 mm (i.d.)	A
7	160	TM	4	175	8:1	0,37	G 3/4" 13 mm (i.d.)	A
7	86	TM	4	94	15:1	0,37	G 3/4" 13 mm (i.d.)	A
7	64	TM	4	70	20:1	0,37	G 3/4" 13 mm (i.d.)	A
7	32	TM	4	35	40:1	0,37	G 3/4" 13 mm (i.d.)	A
5	240	TM	6	175	8:1	0,37	G 3/4" 18 mm (i.d.)	B
5	128	TM	6	94	15:1	0,37	G 3/4" 18 mm (i.d.)	B
5	96	TM	6	70	20:1	0,37	G 3/4" 18 mm (i.d.)	B
5	48	TM	6	35	40:1	0,37	G 3/4" 18 mm (i.d.)	B
2	1000	UMS	10	175	8:1	0,37	G 1 1/2" 30 mm (i.d.)	C
5	1000	UMS	10	175	8:1	0,55	G 1 1/2" 30 mm (i.d.)	C
5	520	UMS	10	94	15:1	0,37	G 1 1/2" 30 mm (i.d.)	C
4	520	UMS	10	94	15:1	0,37	G 1 1/2" 30 mm (i.d.)	C
5	390	UMS	10	70	20:1	0,37	G 1 1/2" 30 mm (i.d.)	C
5	180	UMS	10	35	40:1	0,37	G 1 1/2" 30 mm (i.d.)	C
5	350	UMS	4	175	8:1	0,37	G 1 1/2" 30 mm (i.d.)	C
5	188	UMS	4	94	15:1	0,37	G 1 1/2" 30 mm (i.d.)	C
5	140	UMS	4	70	20:1	0,37	G 1 1/2" 30 mm (i.d.)	C
5	70	UMS	4	35	40:1	0,37	G 1 1/2" 30 mm (i.d.)	C
5	440	UMS	5	175	8:1	0,37	G 1 1/2" 30 mm (i.d.)	C
5	236	UMS	5	94	15:1	0,37	G 1 1/2" 30 mm (i.d.)	C
5	176	UMS	5	70	20:1	0,37	G 1 1/2" 30 mm (i.d.)	C
5	88	UMS	5	35	40:1	0,37	G 1 1/2" 30 mm (i.d.)	C
5	530	UMS	6	175	8:1	0,37	G 1 1/2" 30 mm (i.d.)	C
5	284	UMS	6	94	15:1	0,37	G 1 1/2" 30 mm (i.d.)	C
5	212	UMS	6	70	20:1	0,37	G 1 1/2" 30 mm (i.d.)	C
5	106	UMS	6	35	40:1	0,37	G 1 1/2" 30 mm (i.d.)	C
3	750	UMS	8	175	8:1	0,37	G 1 1/2" 30 mm (i.d.)	C
5	750	UMS	8	175	8:1	0,55	G 1 1/2" 30 mm (i.d.)	C
5	380	UMS	8	94	15:1	0,37	G 1 1/2" 30 mm (i.d.)	C
5	290	UMS	8	70	20:1	0,37	G 1 1/2" 30 mm (i.d.)	C
5	141	UMS	8	35	40:1	0,37	G 1 1/2" 30 mm (i.d.)	C

PRIUS D 50Hz Series | STANDARD

PRIUS D 50Hz SINGLE-PHASE

bar	l/h	Pump Head				Motor	PVDF	Installation Kit
		model	stroke (mm)	SPM	reduction	kW	hoses connection	
10	60	NM	3	175	8:1	0,37	G 1/2" 13 mm (i.d.)	A
10	30	NM	3	94	15:1	0,37	G 1/2" 13 mm (i.d.)	A
10	24	NM	3	70	20:1	0,37	G 1/2" 13 mm (i.d.)	A
10	12	NM	3	35	40:1	0,37	G 1/2" 13 mm (i.d.)	A
10	105	TM	3	175	8:1	0,37	G 3/4" 13 mm (i.d.)	A
10	56	TM	3	94	15:1	0,37	G 3/4" 13 mm (i.d.)	A
10	42	TM	3	70	20:1	0,37	G 3/4" 13 mm (i.d.)	A
10	21	TM	3	35	40:1	0,37	G 3/4" 13 mm (i.d.)	A
7	160	TM	4	175	8:1	0,37	G 3/4" 13 mm (i.d.)	A
7	86	TM	4	94	15:1	0,37	G 3/4" 13 mm (i.d.)	A
7	64	TM	4	70	20:1	0,37	G 3/4" 13 mm (i.d.)	A
7	32	TM	4	35	40:1	0,37	G 3/4" 13 mm (i.d.)	A
5	240	TM	6	175	8:1	0,37	G 3/4" 18 mm (i.d.)	B
5	128	TM	6	94	15:1	0,37	G 3/4" 18 mm (i.d.)	B
5	96	TM	6	70	20:1	0,37	G 3/4" 18 mm (i.d.)	B
5	48	TM	6	35	40:1	0,37	G 3/4" 18 mm (i.d.)	B
5	350	UMS	4	175	8:1	0,55	G 1 1/2" 30 mm (i.d.)	C
5	188	UMS	4	94	15:1	0,37	G 1 1/2" 30 mm (i.d.)	C
5	140	UMS	4	70	20:1	0,37	G 1 1/2" 30 mm (i.d.)	C
5	70	UMS	4	35	40:1	0,37	G 1 1/2" 30 mm (i.d.)	C
5	440	UMS	5	175	8:1	0,55	G 1 1/2" 30 mm (i.d.)	C
5	236	UMS	5	94	15:1	0,37	G 1 1/2" 30 mm (i.d.)	C
5	176	UMS	5	70	20:1	0,37	G 1 1/2" 30 mm (i.d.)	C
5	88	UMS	5	35	40:1	0,37	G 1 1/2" 30 mm (i.d.)	C
5	530	UMS	6	175	8:1	0,55	G 1 1/2" 30 mm (i.d.)	C
5	284	UMS	6	94	15:1	0,37	G 1 1/2" 30 mm (i.d.)	C
5	212	UMS	6	70	20:1	0,37	G 1 1/2" 30 mm (i.d.)	C
5	106	UMS	6	35	40:1	0,37	G 1 1/2" 30 mm (i.d.)	C

PRIUS D 50Hz Series | STANDARD

PRIUS D 50Hz SINGLE-PHASE

bar	l/h	Pump Head				Motor	AISI 316L	Installation Kit
		model	stroke (mm)	SPM	reduction	kW	hoses connection	
10	60	NM	3	175	8:1	0,37	R 1/2″	A
10	30	NM	3	94	15:1	0,37	R 1/2″	A
10	24	NM	3	70	20:1	0,37	R 1/2″	A
10	12	NM	3	35	40:1	0,37	R 1/2″	A
10	105	TM	3	175	8:1	0,37	R 3/4″	A
10	56	TM	3	94	15:1	0,37	R 3/4″	A
10	42	TM	3	70	20:1	0,37	R 3/4″	A
10	21	TM	3	35	40:1	0,37	R 3/4″	A
7	160	TM	4	175	8:1	0,37	R 3/4″	A
7	86	TM	4	94	15:1	0,37	R 3/4″	A
7	64	TM	4	70	20:1	0,37	R 3/4″	A
7	32	TM	4	35	40:1	0,37	R 3/4″	A
5	240	TM	6	175	8:1	0,37	R 3/4″	B
5	128	TM	6	94	15:1	0,37	R 3/4″	B
5	96	TM	6	70	20:1	0,37	R 3/4″	B
5	48	TM	6	35	40:1	0,37	R 3/4″	B
5	350	UMS	4	175	8:1	0,55	R 1″	C
5	188	UMS	4	94	15:1	0,37	R 1″	C
5	140	UMS	4	70	20:1	0,37	R 1″	C
5	70	UMS	4	35	40:1	0,37	R 1″	C
5	440	UMS	5	175	8:1	0,55	R 1″	C
5	236	UMS	5	94	15:1	0,37	R 1″	C
5	176	UMS	5	70	20:1	0,37	R 1″	C
5	88	UMS	5	35	40:1	0,37	R 1″	C
5	530	UMS	6	175	8:1	0,55	R 1″	C
5	284	UMS	6	94	15:1	0,37	R 1″	C
5	212	UMS	6	70	20:1	0,37	R 1″	C
5	106	UMS	6	35	40:1	0,37	R 1″	C

PRIUS D 50Hz Series | STANDARD

PRIUS D 50Hz SINGLE-PHASE

bar	l/h	Pump Head				Motor	PP	Installation Kit
		model	stroke (mm)	SPM	reduction	kW	hoses connection	
10	60	NM	3	175	8:1	0,37	G 1/2" 13 mm (i.d.)	A
10	30	NM	3	94	15:1	0,37	G 1/2" 13 mm (i.d.)	A
10	24	NM	3	70	20:1	0,37	G 1/2" 13 mm (i.d.)	A
10	12	NM	3	35	40:1	0,37	G 1/2" 13 mm (i.d.)	A
10	105	TM	3	175	8:1	0,37	G 3/4" 13 mm (i.d.)	A
10	56	TM	3	94	15:1	0,37	G 3/4" 13 mm (i.d.)	A
10	42	TM	3	70	20:1	0,37	G 3/4" 13 mm (i.d.)	A
10	21	TM	3	35	40:1	0,37	G 3/4" 13 mm (i.d.)	A
7	160	TM	4	175	8:1	0,37	G 3/4" 13 mm (i.d.)	A
7	86	TM	4	94	15:1	0,37	G 3/4" 13 mm (i.d.)	A
7	64	TM	4	70	20:1	0,37	G 3/4" 13 mm (i.d.)	A
7	32	TM	4	35	40:1	0,37	G 3/4" 13 mm (i.d.)	A
5	240	TM	6	175	8:1	0,37	G 3/4" 18 mm (i.d.)	B
5	128	TM	6	94	15:1	0,37	G 3/4" 18 mm (i.d.)	B
5	96	TM	6	70	20:1	0,37	G 3/4" 18 mm (i.d.)	B
5	48	TM	6	35	40:1	0,37	G 3/4" 18 mm (i.d.)	B
5	350	UMS	4	175	8:1	0,55	G 1 1/2" 30 mm (i.d.)	C
5	188	UMS	4	94	15:1	0,37	G 1 1/2" 30 mm (i.d.)	C
5	140	UMS	4	70	20:1	0,37	G 1 1/2" 30 mm (i.d.)	C
5	70	UMS	4	35	40:1	0,37	G 1 1/2" 30 mm (i.d.)	C
5	440	UMS	5	175	8:1	0,55	G 1 1/2" 30 mm (i.d.)	C
5	236	UMS	5	94	15:1	0,37	G 1 1/2" 30 mm (i.d.)	C
5	176	UMS	5	70	20:1	0,37	G 1 1/2" 30 mm (i.d.)	C
5	88	UMS	5	35	40:1	0,37	G 1 1/2" 30 mm (i.d.)	C
5	530	UMS	6	175	8:1	0,55	G 1 1/2" 30 mm (i.d.)	C
5	284	UMS	6	94	15:1	0,37	G 1 1/2" 30 mm (i.d.)	C
5	212	UMS	6	70	20:1	0,37	G 1 1/2" 30 mm (i.d.)	C
5	106	UMS	6	35	40:1	0,37	G 1 1/2" 30 mm (i.d.)	C

PRIUS D 50Hz Series | HIGH PRESSURE

PRIUS D 50Hz AP THREE-PHASE

bar	l/h	Pump Head				Motor	PVDF	Installation Kit
		model	stroke (mm)	SPM	reduction	kW	hoses connection	
20	30	NM AP	2	175	8:1	0,37	8x10 (PVDF) / 8x12 (PVC)	●
20	16	NM AP	2	94	15:1	0,37	8x10 (PVDF) / 8x12 (PVC)	●
20	12	NM AP	2	70	20:1	0,37	8x10 (PVDF) / 8x12 (PVC)	●
20	6	NM AP	2	35	40:1	0,37	8x10 (PVDF) / 8x12 (PVC)	●

PRIUS D 50Hz AP THREE-PHASE

bar	l/h	Pump Head				Motor	AISI 316L	Installation Kit
		model	stroke (mm)	SPM	reduction	kW	hoses connection	
100	4	LM AP	1,5	175	8:1	0,37	R 3/8″	●
100	2	LM AP	1,5	94	15:1	0,37	R 3/8″	●
100	1,5	LM AP	1,5	70	20:1	0,37	R 3/8″	●
50	17	MM AP	2	175	8:1	0,37	R 1/2″	●
50	9	MM AP	2	94	15:1	0,37	R 1/2″	●
50	5	MM AP	2	70	20:1	0,37	R 1/2″	●
50	2,5	MM AP	2	35	40:1	0,37	R 1/2″	●
30	28	MM AP	2	175	8:1	0,37	R 1/2″	●
30	14	MM AP	2	94	15:1	0,37	R 1/2″	●
30	10	MM AP	2	70	20:1	0,37	R 1/2″	●
30	5	MM AP	2	35	40:1	0,37	R 1/2″	●
30	76	SM AP	4	175	8:1	0,37	R 1/2″	●
30	41	SM AP	4	94	15:1	0,37	R 1/2″	●
30	30	SM AP	4	70	20:1	0,37	R 1/2″	●
30	15	SM AP	4	35	40:1	0,37	R 1/2″	●
20	91	TM AP	6	94	15:1	0,37	R 3/4″	●
20	68	TM AP	6	70	20:1	0,37	R 3/4″	●
20	34	TM AP	6	35	40:1	0,37	R 3/4″	●

PRIUS D 50Hz Series | HIGH PRESSURE

PRIUS D 50Hz AP SINGLE-PHASE

bar	l/h	Pump Head				Motor	AISI 316L	Installation Kit
		model	stroke (mm)	SPM	reduction	kW	hoses connection	
100	4	LM AP	1,5	175	8:1	0,37	R 3/8″	●
100	2	LM AP	1,5	94	15:1	0,37	R 3/8″	●
100	1,5	LM AP	1,5	70	20:1	0,37	R 3/8″	●
50	17	MM AP	2	175	8:1	0,37	R 1/2″	●
50	9	MM AP	2	94	15:1	0,37	R 1/2″	●
50	5	MM AP	2	70	20:1	0,37	R 1/2″	●
50	2,5	MM AP	2	35	40:1	0,37	R 1/2″	●
30	28	MM AP	2	175	8:1	0,37	R 1/2″	●
30	14	MM AP	2	94	15:1	0,37	R 1/2″	●
30	10	MM AP	2	70	20:1	0,37	R 1/2″	●
30	5	MM AP	2	35	40:1	0,37	R 1/2″	●
30	76	SM AP	4	175	8:1	0,37	R 1/2″	●
30	41	SM AP	4	94	15:1	0,37	R 1/2″	●
30	30	SM AP	4	70	20:1	0,37	R 1/2″	●
30	15	SM AP	4	35	40:1	0,37	R 1/2″	●
20	91	TM AP	6	94	15:1	0,55	R 3/4″	●
20	68	TM AP	6	70	20:1	0,37	R 3/4″	●
20	34	TM AP	6	35	40:1	0,37	R 3/4″	●

PRIUS D 50Hz Series | ATEX 2G/2D

PRIUS D 50Hz THREE-PHASE ATEX 2G

bar	l/h	Pump Head				Motor	AISI 316L (II 2G Ex h IIC T3 Gb)	Installation Kit
		model	stroke (mm)	SPM	reduction	kW	hoses connection	
10	6	NM	1,5	35	40:1	0,25	R 1/2"	●
10	60	NM	3	175	8:1	0,25	R 1/2"	●
10	30	NM	3	94	15:1	0,25	R 1/2"	●
10	24	NM	3	70	20:1	0,25	R 1/2"	●
10	12	NM	3	35	40:1	0,25	R 1/2"	●
10	16	NM	4	35	40:1	0,25	R 1/2"	●
10	105	TM	3	175	8:1	0,37	R 3/4"	●
10	56	TM	3	94	15:1	0,37	R 3/4"	●
10	42	TM	3	70	20:1	0,37	R 3/4"	●
10	21	TM	3	35	40:1	0,37	R 3/4"	●
7	160	TM	4	175	8:1	0,37	R 3/4"	●
7	86	TM	4	94	15:1	0,37	R 3/4"	●
7	64	TM	4	70	20:1	0,37	R 3/4"	●
7	32	TM	4	35	40:1	0,37	R 3/4"	●
5	240	TM	6	175	8:1	0,37	R 3/4"	●
5	128	TM	6	94	15:1	0,37	R 3/4"	●
5	96	TM	6	70	20:1	0,37	R 3/4"	●
5	48	TM	6	35	40:1	0,37	R 3/4"	●

PRIUS D 50Hz THREE-PHASE ATEX 2D

bar	l/h	Pump Head				Motor	AISI 316L (II 2D Ex h IIIC T120° Db)	Installation Kit
		model	stroke (mm)	SPM	reduction	kW	hoses connection	
10	6	NM	1,5	35	40:1	0,25	R 1/2"	●
10	60	NM	3	175	8:1	0,25	R 1/2"	●
10	30	NM	3	94	15:1	0,25	R 1/2"	●
10	24	NM	3	70	20:1	0,25	R 1/2"	●
10	12	NM	3	35	40:1	0,25	R 1/2"	●
10	16	NM	4	35	40:1	0,25	R 1/2"	●
10	105	TM	3	175	8:1	0,37	R 3/4"	●
10	56	TM	3	94	15:1	0,37	R 3/4"	●
10	42	TM	3	70	20:1	0,37	R 3/4"	●
10	21	TM	3	35	40:1	0,37	R 3/4"	●
7	160	TM	4	175	8:1	0,37	R 3/4"	●
7	86	TM	4	94	15:1	0,37	R 3/4"	●
7	64	TM	4	70	20:1	0,37	R 3/4"	●
7	32	TM	4	35	40:1	0,37	R 3/4"	●
5	240	TM	6	175	8:1	0,37	R 3/4"	●
5	128	TM	6	94	15:1	0,37	R 3/4"	●
5	96	TM	6	70	20:1	0,37	R 3/4"	●
5	48	TM	6	35	40:1	0,37	R 3/4"	●

PRIUS D 50Hz Series | HIGH PRESSURE ATEX 2G/2D

PRIUS D 50Hz AP THREE-PHASE ATEX 2G

bar	l/h	Pump Head				Motor	AISI 316L (II 2G Ex h IIC T3 Gb)	Installation Kit
		model	stroke (mm)	SPM	reduction	kW	hoses connection	
100	4	LM AP	1,5	175	8:1	0,37	R 3/8″	●
100	2	LM AP	1,5	94	15:1	0,37	R 3/8″	●
100	1,5	LM AP	1,5	70	20:1	0,37	R 3/8″	●
50	17	MM AP	2	175	8:1	0,37	R 1/2″	●
50	9	MM AP	2	94	15:1	0,37	R 1/2″	●
50	5	MM AP	2	70	20:1	0,37	R 1/2″	●
50	2,5	MM AP	2	35	40:1	0,37	R 1/2″	●
30	28	NM AP	2	175	8:1	0,37	R 1/2″	●
30	15	NM AP	2	94	15:1	0,37	R 1/2″	●
30	10	NM AP	2	70	20:1	0,37	R 1/2″	●
30	5	NM AP	2	35	40:1	0,37	R 1/2″	●
30	76	SM AP	4	175	8:1	0,37	R 1/2″	●
30	41	SM AP	4	94	15:1	0,37	R 1/2″	●
30	30	SM AP	4	70	20:1	0,37	R 1/2″	●
30	14	SM AP	4	35	40:1	0,37	R 1/2″	●
20	91	TM AP	4	94	15:1	0,37	R 3/4″	●
20	68	TM AP	4	70	20:1	0,37	R 3/4″	●
20	34	TM AP	4	35	40:1	0,37	R 3/4″	●

PRIUS D 50Hz AP THREE-PHASE ATEX 2D

bar	l/h	Pump Head				Motor	AISI 316L (II 2D Ex h IIIC T120° Db)	Installation Kit
		model	stroke (mm)	SPM	reduction	kW	hoses connection	
100	4	LM AP	1,5	175	8:1	0,37	R 3/8″	●
100	2	LM AP	1,5	94	15:1	0,37	R 3/8″	●
100	1,5	LM AP	1,5	70	20:1	0,37	R 3/8″	●
50	17	MM AP	2	175	8:1	0,37	R 1/2″	●
50	9	MM AP	2	94	15:1	0,37	R 1/2″	●
50	5	MM AP	2	70	20:1	0,37	R 1/2″	●
50	2,5	MM AP	2	35	40:1	0,37	R 1/2″	●
30	28	NM AP	2	175	8:1	0,37	R 1/2″	●
30	15	NM AP	2	94	15:1	0,37	R 1/2″	●
30	10	NM AP	2	70	20:1	0,37	R 1/2″	●
30	5	NM AP	2	35	40:1	0,37	R 1/2″	●
30	76	SM AP	4	175	8:1	0,37	R 1/2″	●
30	41	SM AP	4	94	15:1	0,37	R 1/2″	●
30	30	SM AP	4	70	20:1	0,37	R 1/2″	●
30	14	SM AP	4	35	40:1	0,37	R 1/2″	●
20	91	TM AP	4	94	15:1	0,37	R 3/4″	●
20	68	TM AP	4	70	20:1	0,37	R 3/4″	●
20	34	TM AP	4	35	40:1	0,37	R 3/4″	●

PRIUS D 50Hz Series | ATEX 3G/3D

PRIUS D 50Hz THREE-PHASE ATEX 3G

bar	l/h	Pump Head				Motor	PVDF (II 3G Ex h IIC T3 Gc)	Installation Kit
		model	stroke (mm)	SPM	reduction	kW	hoses connection	
10	60	NM	3	175	8:1	0,18	/	A
10	30	NM	3	94	15:1	0,18	/	A
10	24	NM	3	70	20:1	0,18	/	A
10	12	NM	3	35	40:1	0,18	/	A
10	16	NM	4	35	40:1	0,18	/	A
10	105	TM	3	175	8:1	0,37	/	A
10	56	TM	3	94	15:1	0,37	/	A
10	42	TM	3	70	20:1	0,37	/	A
10	21	NM	3	35	40:1	0,37	/	A
7	160	TM	4	175	8:1	0,37	/	A
7	86	TM	4	94	15:1	0,37	/	A
7	64	TM	4	70	20:1	0,37	/	A
7	32	TM	4	35	40:1	0,37	/	A
5	240	TM	6	175	8:1	0,37	/	B
5	128	TM	6	94	15:1	0,37	/	B
5	96	TM	6	70	20:1	0,37	/	B
5	48	TM	6	35	40:1	0,37	/	B
5	1000	UMS	10	175	8:1	0,55	/	C
2	1000	UMS	10	175	8:1	0,37	/	C
5	520	UMS	10	94	15:1	0,37	/	C
4	520	UMS	10	94	15:1	0,37	/	C
5	390	UMS	10	70	20:1	0,37	/	C
5	180	UMS	10	35	40:1	0,37	/	C
5	350	UMS	4	175	8:1	0,37	/	C
5	188	UMS	4	94	15:1	0,37	/	C
5	140	UMS	4	70	20:1	0,37	/	C
5	70	UMS	4	35	40:1	0,37	/	C
5	440	UMS	5	175	8:1	0,37	/	C
5	236	UMS	5	94	15:1	0,37	/	C
5	176	UMS	5	70	20:1	0,37	/	C
5	88	UMS	5	35	40:1	0,37	/	C
5	530	UMS	6	175	8:1	0,37	/	C
5	284	UMS	6	94	15:1	0,37	/	C
5	212	UMS	6	70	20:1	0,37	/	C
5	106	UMS	6	35	40:1	0,37	/	C
5	750	UMS	8	175	8:1	0,55	/	C
3	750	UMS	8	175	8:1	0,37	/	C
5	380	UMS	8	94	15:1	0,37	/	C
5	290	UMS	8	70	20:1	0,37	/	C
5	141	UMS	8	35	40:1	0,37	/	C

PRIUS D 50Hz Series | ATEX 3G/3D

PRIUS D 50Hz THREE-PHASE ATEX 3G

bar	l/h	Pump Head				Motor	AISI 316L (II 3G Ex h IIC T3 Gc)	Installation Kit
		model	stroke (mm)	SPM	reduction	kW	hoses connection	
5	1000	UMS	10	175	8:1	0,55	/	C
2	1000	UMS	10	175	8:1	0,37	/	C
5	520	UMS	10	94	15:1	0,37	/	C
4	520	UMS	10	94	15:1	0,37	/	C
5	390	UMS	10	70	20:1	0,37	/	C
5	180	UMS	10	35	40:1	0,37	/	C
5	350	UMS	4	175	8:1	0,37	/	C
5	188	UMS	4	94	15:1	0,37	/	C
5	140	UMS	4	70	20:1	0,37	/	C
5	70	UMS	4	35	40:1	0,37	/	C
5	440	UMS	5	175	8:1	0,37	/	C
5	236	UMS	5	94	15:1	0,37	/	C
5	176	UMS	5	70	20:1	0,37	/	C
5	88	UMS	5	35	40:1	0,37	/	C
5	530	UMS	6	175	8:1	0,37	/	C
5	284	UMS	6	94	15:1	0,37	/	C
5	212	UMS	6	70	20:1	0,37	/	C
5	106	UMS	6	35	40:1	0,37	/	C
5	750	UMS	8	175	8:1	0,55	/	C
3	750	UMS	8	175	8:1	0,37	/	C
5	380	UMS	8	94	15:1	0,37	/	C
5	290	UMS	8	70	20:1	0,37	/	C
5	141	UMS	8	35	40:1	0,37	/	C

PRIUS D 50Hz Series | ATEX 3G/3D

PRIUS D 50Hz THREE-PHASE ATEX 3G

bar	l/h	Pump Head				Motor	PP (II 3G Ex h IIC T3 Gc)	Installation Kit
		model	stroke (mm)	SPM	reduction	kW	hoses connection	
10	60	NM	3	175	8:1	0,18	/	A
10	30	NM	3	94	15:1	0,18	/	A
10	24	NM	3	70	20:1	0,18	/	A
10	12	NM	3	35	40:1	0,18	/	A
10	16	NM	4	35	40:1	0,18	/	A
10	105	TM	3	175	8:1	0,37	/	A
10	56	TM	3	94	15:1	0,37	/	A
10	42	TM	3	70	20:1	0,37	/	A
10	21	NM	3	35	40:1	0,37	/	A
7	160	TM	4	175	8:1	0,37	/	A
7	86	TM	4	94	15:1	0,37	/	A
7	64	TM	4	70	20:1	0,37	/	A
7	32	TM	4	35	40:1	0,37	/	A
5	240	TM	6	175	8:1	0,37	/	B
5	128	TM	6	94	15:1	0,37	/	B
5	96	TM	6	70	20:1	0,37	/	B
5	48	TM	6	35	40:1	0,37	/	B
5	1000	UMS	10	175	8:1	0,55	/	C
2	1000	UMS	10	175	8:1	0,37	/	C
5	520	UMS	10	94	15:1	0,37	/	C
4	520	UMS	10	94	15:1	0,37	/	C
5	390	UMS	10	70	20:1	0,37	/	C
5	180	UMS	10	35	40:1	0,37	/	C
5	350	UMS	4	175	8:1	0,37	/	C
5	188	UMS	4	94	15:1	0,37	/	C
5	140	UMS	4	70	20:1	0,37	/	C
5	70	UMS	4	35	40:1	0,37	/	C
5	440	UMS	5	175	8:1	0,37	/	C
5	236	UMS	5	94	15:1	0,37	/	C
5	176	UMS	5	70	20:1	0,37	/	C
5	88	UMS	5	35	40:1	0,37	/	C
5	530	UMS	6	175	8:1	0,37	/	C
5	284	UMS	6	94	15:1	0,37	/	C
5	212	UMS	6	70	20:1	0,37	/	C
5	106	UMS	6	35	40:1	0,37	/	C
5	750	UMS	8	175	8:1	0,55	/	C
3	750	UMS	8	175	8:1	0,37	/	C
5	380	UMS	8	94	15:1	0,37	/	C
5	290	UMS	8	70	20:1	0,37	/	C
5	141	UMS	8	35	40:1	0,37	/	C

PRIUS D 50Hz Series | ATEX 3G/3D

PRIUS D 50Hz THREE-PHASE ATEX 3D

bar	l/h	Pump Head				Motor	PVDF (II 3D Ex h IIIC T120° Dc)	Installation Kit
		model	stroke (mm)	SPM	reduction	kW	hoses connection	
10	60	NM	3	175	8:1	0,25	/	A
10	30	NM	3	94	15:1	0,25	/	A
10	24	NM	3	70	20:1	0,25	/	A
10	12	NM	3	35	40:1	0,25	/	A
10	16	NM	4	35	40:1	0,25	/	A
10	105	TM	3	175	8:1	0,37	/	A
10	56	TM	3	94	15:1	0,37	/	A
10	42	TM	3	70	20:1	0,37	/	A
10	21	NM	3	35	40:1	0,37	/	A
7	160	TM	4	175	8:1	0,37	/	A
7	86	TM	4	94	15:1	0,37	/	A
7	64	TM	4	70	20:1	0,37	/	A
7	32	TM	4	35	40:1	0,37	/	A
5	240	TM	6	175	8:1	0,37	/	B
5	128	TM	6	94	15:1	0,37	/	B
5	96	TM	6	70	20:1	0,37	/	B
5	48	TM	6	35	40:1	0,37	/	B
5	1000	UMS	10	175	8:1	0,25	/	C
2	1000	UMS	10	175	8:1	0,37	/	C
5	520	UMS	10	94	15:1	0,37	/	C
4	520	UMS	10	94	15:1	0,37	/	C
5	390	UMS	10	70	20:1	0,37	/	C
5	180	UMS	10	35	40:1	0,37	/	C
5	350	UMS	4	175	8:1	0,37	/	C
5	188	UMS	4	94	15:1	0,37	/	C
5	140	UMS	4	70	20:1	0,37	/	C
5	70	UMS	4	35	40:1	0,37	/	C
5	440	UMS	5	175	8:1	0,37	/	C
5	236	UMS	5	94	15:1	0,37	/	C
5	176	UMS	5	70	20:1	0,37	/	C
5	88	UMS	5	35	40:1	0,37	/	C
5	530	UMS	6	175	8:1	0,37	/	C
5	284	UMS	6	94	15:1	0,37	/	C
5	212	UMS	6	70	20:1	0,37	/	C
5	106	UMS	6	35	40:1	0,37	/	C
5	750	UMS	8	175	8:1	0,25	/	C
3	750	UMS	8	175	8:1	0,37	/	C
5	380	UMS	8	94	15:1	0,37	/	C
5	290	UMS	8	70	20:1	0,37	/	C
5	141	UMS	8	35	40:1	0,37	/	C

PRIUS D 50Hz Series | ATEX 3G/3D

PRIUS D 50Hz THREE-PHASE ATEX 3D

bar	l/h	Pump Head				Motor	AISI 316L (II 3D Ex h IIIC T120° Dc)	Installation Kit
		model	stroke (mm)	SPM	reduction	kW	hoses connection	
5	1000	UMS	10	175	8:1	0,55	/	C
2	1000	UMS	10	175	8:1	0,37	/	C
5	520	UMS	10	94	15:1	0,37	/	C
4	520	UMS	10	94	15:1	0,37	/	C
5	390	UMS	10	70	20:1	0,37	/	C
5	180	UMS	10	35	40:1	0,37	/	C
5	350	UMS	4	175	8:1	0,37	/	C
5	188	UMS	4	94	15:1	0,37	/	C
5	140	UMS	4	70	20:1	0,37	/	C
5	70	UMS	4	35	40:1	0,37	/	C
5	440	UMS	5	175	8:1	0,37	/	C
5	236	UMS	5	94	15:1	0,37	/	C
5	176	UMS	5	70	20:1	0,37	/	C
5	88	UMS	5	35	40:1	0,37	/	C
5	530	UMS	6	175	8:1	0,37	/	C
5	284	UMS	6	94	15:1	0,37	/	C
5	212	UMS	6	70	20:1	0,37	/	C
5	106	UMS	6	35	40:1	0,37	/	C
5	750	UMS	8	175	8:1	0,55	/	C
3	750	UMS	8	175	8:1	0,37	/	C
5	380	UMS	8	94	15:1	0,37	/	C
5	290	UMS	8	70	20:1	0,37	/	C
5	141	UMS	8	35	40:1	0,37	/	C

PRIUS D 50Hz Series | ATEX 3G/3D

PRIUS D 50Hz THREE-PHASE ATEX 3D

bar	l/h	Pump Head				Motor	PP (II 3D Ex h IIIC T120° Dc)	Installation Kit
		model	stroke (mm)	SPM	reduction	kW	hoses connection	
10	60	NM	3	175	8:1	0,18	/	A
10	30	NM	3	94	15:1	0,18	/	A
10	24	NM	3	70	20:1	0,18	/	A
10	12	NM	3	35	40:1	0,18	/	A
10	16	NM	4	35	40:1	0,18	/	A
10	105	TM	3	175	8:1	0,37	/	A
10	56	TM	3	94	15:1	0,37	/	A
10	42	TM	3	70	20:1	0,37	/	A
10	21	NM	3	35	40:1	0,37	/	A
7	160	TM	4	175	8:1	0,37	/	A
7	86	TM	4	94	15:1	0,37	/	A
7	64	TM	4	70	20:1	0,37	/	A
7	32	TM	4	35	40:1	0,37	/	A
5	240	TM	6	175	8:1	0,37	/	B
5	128	TM	6	94	15:1	0,37	/	B
5	96	TM	6	70	20:1	0,37	/	B
5	48	TM	6	35	40:1	0,37	/	B
5	1000	UMS	10	175	8:1	0,55	/	C
2	1000	UMS	10	175	8:1	0,37	/	C
5	520	UMS	10	94	15:1	0,37	/	C
4	520	UMS	10	94	15:1	0,37	/	C
5	390	UMS	10	70	20:1	0,37	/	C
5	180	UMS	10	35	40:1	0,37	/	C
5	350	UMS	4	175	8:1	0,37	/	C
5	188	UMS	4	94	15:1	0,37	/	C
5	140	UMS	4	70	20:1	0,37	/	C
5	70	UMS	4	35	40:1	0,37	/	C
5	440	UMS	5	175	8:1	0,37	/	C
5	236	UMS	5	94	15:1	0,37	/	C
5	176	UMS	5	70	20:1	0,37	/	C
5	88	UMS	5	35	40:1	0,37	/	C
5	530	UMS	6	175	8:1	0,37	/	C
5	284	UMS	6	94	15:1	0,37	/	C
5	212	UMS	6	70	20:1	0,37	/	C
5	106	UMS	6	35	40:1	0,37	/	C
5	750	UMS	8	175	8:1	0,55	/	C
3	750	UMS	8	175	8:1	0,37	/	C
5	380	UMS	8	94	15:1	0,37	/	C
5	290	UMS	8	70	20:1	0,37	/	C
5	141	UMS	8	35	40:1	0,37	/	C

PRIUS D 60Hz Series | STANDARD

PRIUS D 60Hz THREE-PHASE

bar	l/h	Pump Head				Motor	PVDF	Installation Kit
		model	stroke (mm)	SPM	reduction	kW	hoses connection	
10	55	NM	3	175	10:1	0,18	G 1/2" 13 mm (i.d.)	A
10	27	NM	3	87	20:1	0,18	G 1/2" 13 mm (i.d.)	A
10	14	NM	3	44	40:1	0,18	G 1/2" 13 mm (i.d.)	A
10	100	TM	3	175	10:1	0,37	G 3/4" 13 mm (i.d.)	A
10	50	TM	3	87	20:1	0,37	G 3/4" 13 mm (i.d.)	A
10	25	TM	3	44	40:1	0,37	G 3/4" 13 mm (i.d.)	A
7	150	TM	4	175	10:1	0,37	G 3/4" 13 mm (i.d.)	A
7	75	TM	4	87	20:1	0,37	G 3/4" 13 mm (i.d.)	A
7	37	TM	4	44	40:1	0,37	G 3/4" 13 mm (i.d.)	A
5	230	TM	6	175	10:1	0,37	G 3/4" 18 mm (i.d.)	B
5	115	TM	6	87	20:1	0,37	G 3/4" 18 mm (i.d.)	B
5	57	TM	6	44	40:1	0,37	G 3/4" 18 mm (i.d.)	B
2	950	UMS	10	175	10:1	0,37	G 1 1/2" 30 mm (i.d.)	C
5	950	UMS	10	175	10:1	0,55	G 1 1/2" 30 mm (i.d.)	C
2	472	UMS	10	87	20:1	0,37	G 1 1/2" 30 mm (i.d.)	C
2	238	UMS	10	44	40:1	0,37	G 1 1/2" 30 mm (i.d.)	C
5	335	UMS	4	175	10:1	0,37	G 1 1/2" 30 mm (i.d.)	C
5	165	UMS	4	87	20:1	0,37	G 1 1/2" 30 mm (i.d.)	C
5	84	UMS	4	44	40:1	0,37	G 1 1/2" 30 mm (i.d.)	C
5	420	UMS	5	175	10:1	0,37	G 1 1/2" 30 mm (i.d.)	C
5	210	UMS	5	87	20:1	0,37	G 1 1/2" 30 mm (i.d.)	C
5	105	UMS	5	44	40:1	0,37	G 1 1/2" 30 mm (i.d.)	C
5	505	UMS	6	175	10:1	0,37	G 1 1/2" 30 mm (i.d.)	C
5	250	UMS	6	87	20:1	0,37	G 1 1/2" 30 mm (i.d.)	C
5	126	UMS	6	44	40:1	0,37	G 1 1/2" 30 mm (i.d.)	C
3	720	UMS	8	175	10:1	0,37	G 1 1/2" 30 mm (i.d.)	C
3	357	UMS	8	87	20:1	0,37	G 1 1/2" 30 mm (i.d.)	C
3	181	UMS	8	44	40:1	0,37	G 1 1/2" 30 mm (i.d.)	C
5	720	UMS	8	175	10:1	0,55	G 1 1/2" 30 mm (i.d.)	C

PRIUS D 60Hz Series | STANDARD

PRIUS D 60Hz THREE-PHASE

bar	l/h	Pump Head				Motor	AISI 316L	Installation Kit
		model	stroke (mm)	SPM	reduction	kW	hoses connection	
10	55	NM	3	175	10:1	0,18	R 1/2″	A
10	27	NM	3	87	20:1	0,18	R 1/2″	A
10	14	NM	3	44	40:1	0,18	R 1/2″	A
10	100	TM	3	175	10:1	0,37	R 3/4″	A
10	50	TM	3	87	20:1	0,37	R 3/4″	A
10	25	TM	3	44	40:1	0,37	R 3/4″	A
7	150	TM	4	175	10:1	0,37	R 3/4″	A
7	75	TM	4	87	20:1	0,37	R 3/4″	A
7	37	TM	4	44	40:1	0,37	R 3/4″	A
5	230	TM	6	175	10:1	0,37	R 3/4″	B
5	115	TM	6	87	20:1	0,37	R 3/4″	B
5	57	TM	6	44	40:1	0,37	R 3/4″	B
2	950	UMS	10	175	10:1	0,37	R 1″	C
5	950	UMS	10	175	10:1	0,55	R 1″	C
2	472	UMS	10	87	20:1	0,37	R 1″	C
2	238	UMS	10	44	40:1	0,37	R 1″	C
5	335	UMS	4	175	10:1	0,37	R 1″	C
5	165	UMS	4	87	20:1	0,37	R 1″	C
5	84	UMS	4	44	40:1	0,37	R 1″	C
5	420	UMS	5	175	10:1	0,37	R 1″	C
5	210	UMS	5	87	20:1	0,37	R 1″	C
5	105	UMS	5	44	40:1	0,37	R 1″	C
5	505	UMS	6	175	10:1	0,37	R 1″	C
5	250	UMS	6	87	20:1	0,37	R 1″	C
5	126	UMS	6	44	40:1	0,37	R 1″	C
3	720	UMS	8	175	10:1	0,37	R 1″	C
3	357	UMS	8	87	20:1	0,37	R 1″	C
3	181	UMS	8	44	40:1	0,37	R 1″	C
5	720	UMS	8	175	10:1	0,55	R 1″	C

PRIUS D 60Hz Series | STANDARD

PRIUS D 60Hz THREE-PHASE

bar	l/h	Pump Head				Motor	PP	Installation Kit
		model	stroke (mm)	SPM	reduction	kW	hoses connection	
10	55	NM	3	175	10:1	0,18	G 1/2" 13 mm (i.d.)	A
10	27	NM	3	87	20:1	0,18	G 1/2" 13 mm (i.d.)	A
10	14	NM	3	44	40:1	0,18	G 1/2" 13 mm (i.d.)	A
10	100	TM	3	175	10:1	0,37	G 3/4" 13 mm (i.d.)	A
10	50	TM	3	87	20:1	0,37	G 3/4" 13 mm (i.d.)	A
10	25	TM	3	44	40:1	0,37	G 3/4" 13 mm (i.d.)	A
7	150	TM	4	175	10:1	0,37	G 3/4" 13 mm (i.d.)	A
7	75	TM	4	87	20:1	0,37	G 3/4" 13 mm (i.d.)	A
7	37	TM	4	44	40:1	0,37	G 3/4" 13 mm (i.d.)	A
5	230	TM	6	175	10:1	0,37	G 3/4" 18 mm (i.d.)	B
5	115	TM	6	87	20:1	0,37	G 3/4" 18 mm (i.d.)	B
5	57	TM	6	44	40:1	0,37	G 3/4" 18 mm (i.d.)	B
2	950	UMS	10	175	10:1	0,37	G 1 1/2" 30 mm (i.d.)	C
5	950	UMS	10	175	10:1	0,55	G 1 1/2" 30 mm (i.d.)	C
2	472	UMS	10	87	20:1	0,37	G 1 1/2" 30 mm (i.d.)	C
2	238	UMS	10	44	40:1	0,37	G 1 1/2" 30 mm (i.d.)	C
5	335	UMS	4	175	10:1	0,37	G 1 1/2" 30 mm (i.d.)	C
5	165	UMS	4	87	20:1	0,37	G 1 1/2" 30 mm (i.d.)	C
5	84	UMS	4	44	40:1	0,37	G 1 1/2" 30 mm (i.d.)	C
5	420	UMS	5	175	10:1	0,37	G 1 1/2" 30 mm (i.d.)	C
5	210	UMS	5	87	20:1	0,37	G 1 1/2" 30 mm (i.d.)	C
5	105	UMS	5	44	40:1	0,37	G 1 1/2" 30 mm (i.d.)	C
5	505	UMS	6	175	10:1	0,37	G 1 1/2" 30 mm (i.d.)	C
5	250	UMS	6	87	20:1	0,37	G 1 1/2" 30 mm (i.d.)	C
5	126	UMS	6	44	40:1	0,37	G 1 1/2" 30 mm (i.d.)	C
3	720	UMS	8	175	10:1	0,37	G 1 1/2" 30 mm (i.d.)	C
3	357	UMS	8	87	20:1	0,37	G 1 1/2" 30 mm (i.d.)	C
3	181	UMS	8	44	40:1	0,37	G 1 1/2" 30 mm (i.d.)	C
5	720	UMS	8	175	10:1	0,55	G 1 1/2" 30 mm (i.d.)	C

PRIUS D 60Hz Series | STANDARD

PRIUS D 60Hz SINGLE-PHASE

bar	l/h	Pump Head				Motor	PVDF	Installation Kit
		model	stroke (mm)	SPM	reduction	kW	hoses connection	
10	55	NM	3	175	10:1	0,37	G 1/2" 13 mm (i.d.)	A
10	27	NM	3	87	20:1	0,37	G 1/2" 13 mm (i.d.)	A
10	14	NM	3	44	40:1	0,37	G 1/2" 13 mm (i.d.)	A
10	100	TM	3	175	10:1	0,37	G 3/4" 13 mm (i.d.)	A
10	50	TM	3	87	20:1	0,37	G 3/4" 13 mm (i.d.)	A
10	25	TM	3	44	40:1	0,37	G 3/4" 13 mm (i.d.)	A
7	150	TM	4	175	10:1	0,37	G 3/4" 13 mm (i.d.)	A
7	75	TM	4	87	20:1	0,37	G 3/4" 13 mm (i.d.)	A
7	37	TM	4	44	40:1	0,37	G 3/4" 13 mm (i.d.)	A
5	230	TM	6	175	10:1	0,37	G 3/4" 18 mm (i.d.)	B
5	115	TM	6	87	20:1	0,37	G 3/4" 18 mm (i.d.)	B
5	57	TM	6	44	40:1	0,37	G 3/4" 18 mm (i.d.)	B
5	335	UMS	4	175	10:1	0,55	G 1 1/2" 30 mm (i.d.)	C
5	165	UMS	4	87	20:1	0,37	G 1 1/2" 30 mm (i.d.)	C
5	84	UMS	4	44	40:1	0,37	G 1 1/2" 30 mm (i.d.)	C
5	420	UMS	5	175	10:1	0,55	G 1 1/2" 30 mm (i.d.)	C
5	210	UMS	5	87	20:1	0,37	G 1 1/2" 30 mm (i.d.)	C
5	105	UMS	5	44	40:1	0,37	G 1 1/2" 30 mm (i.d.)	C
5	505	UMS	6	175	10:1	0,55	G 1 1/2" 30 mm (i.d.)	C
5	250	UMS	6	87	20:1	0,37	G 1 1/2" 30 mm (i.d.)	C
5	126	UMS	6	44	40:1	0,37	G 1 1/2" 30 mm (i.d.)	C

PRIUS D 60Hz SINGLE-PHASE

bar	l/h	Pump Head				Motor	AISI 316L	Installation Kit
		model	stroke (mm)	SPM	reduction	kW	hoses connection	
10	55	NM	3	175	10:1	0,37	R 1/2"	A
10	27	NM	3	87	20:1	0,37	R 1/2"	A
10	14	NM	3	44	40:1	0,37	R 1/2"	A
10	100	TM	3	175	10:1	0,37	R 3/4"	A
10	50	TM	3	87	20:1	0,37	R 3/4"	A
10	25	TM	3	44	40:1	0,37	R 3/4"	A
7	150	TM	4	175	10:1	0,37	R 3/4"	A
7	75	TM	4	87	20:1	0,37	R 3/4"	A
7	37	TM	4	44	40:1	0,37	R 3/4"	A
5	230	TM	6	175	10:1	0,37	R 3/4"	B
5	115	TM	6	87	20:1	0,37	R 3/4"	B
5	57	TM	6	44	40:1	0,37	R 3/4"	B
5	335	UMS	4	175	10:1	0,55	R 1"	C
5	165	UMS	4	87	20:1	0,37	R 1"	C
5	84	UMS	4	44	40:1	0,37	R 1"	C
5	420	UMS	5	175	10:1	0,55	R 1"	C
5	210	UMS	5	87	20:1	0,37	R 1"	C
5	105	UMS	5	44	40:1	0,37	R 1"	C
5	505	UMS	6	175	10:1	0,55	R 1"	C
5	250	UMS	6	87	20:1	0,37	R 1"	C
5	126	UMS	6	44	40:1	0,37	R 1"	C

PRIUS D 60Hz Series | STANDARD

PRIUS D 60Hz SINGLE-PHASE

bar	l/h	Pump Head				Motor	PP	Installation Kit
		model	stroke (mm)	SPM	reduction	kW	hoses connection	
10	55	NM	3	175	10:1	0,37	G 1/2" 13 mm (i.d.)	A
10	27	NM	3	87	20:1	0,37	G 1/2" 13 mm (i.d.)	A
10	14	NM	3	44	40:1	0,37	G 1/2" 13 mm (i.d.)	A
10	100	TM	3	175	10:1	0,37	G 3/4" 13 mm (i.d.)	A
10	50	TM	3	87	20:1	0,37	G 3/4" 13 mm (i.d.)	A
10	25	TM	3	44	40:1	0,37	G 3/4" 13 mm (i.d.)	A
7	150	TM	4	175	10:1	0,37	G 3/4" 13 mm (i.d.)	A
7	75	TM	4	87	20:1	0,37	G 3/4" 13 mm (i.d.)	A
7	37	TM	4	44	40:1	0,37	G 3/4" 13 mm (i.d.)	A
5	230	TM	6	175	10:1	0,37	G 3/4" 18 mm (i.d.)	B
5	115	TM	6	87	20:1	0,37	G 3/4" 18 mm (i.d.)	B
5	57	TM	6	44	40:1	0,37	G 3/4" 18 mm (i.d.)	B
5	335	UMS	4	175	10:1	0,55	G 1 1/2" 30 mm (i.d.)	C
5	165	UMS	4	87	20:1	0,37	G 1 1/2" 30 mm (i.d.)	C
5	84	UMS	4	44	40:1	0,37	G 1 1/2" 30 mm (i.d.)	C
5	420	UMS	5	175	10:1	0,55	G 1 1/2" 30 mm (i.d.)	C
5	210	UMS	5	87	20:1	0,37	G 1 1/2" 30 mm (i.d.)	C
5	105	UMS	5	44	40:1	0,37	G 1 1/2" 30 mm (i.d.)	C
5	505	UMS	6	175	10:1	0,55	G 1 1/2" 30 mm (i.d.)	C
5	250	UMS	6	87	20:1	0,37	G 1 1/2" 30 mm (i.d.)	C
5	126	UMS	6	44	40:1	0,37	G 1 1/2" 30 mm (i.d.)	C

PRIUS D 60Hz Series | HIGH PRESSURE

PRIUS D 60Hz AP THREE-PHASE

bar	l/h	Pump Head				Motor	PVDF	Installation Kit
		model	stroke (mm)	SPM	reduction	kW	hoses connection	
20	27	NM AP	2	175	10:1	0,37	8x10 (PVDF) / 8x12 (PVC)	●
20	13	NM AP	2	87	20:1	0,37	8x10 (PVDF) / 8x12 (PVC)	●
20	7	NM AP	2	44	40:1	0,37	8x10 (PVDF) / 8x12 (PVC)	●

PRIUS D 60Hz AP THREE-PHASE

bar	l/h	Pump Head				Motor	AISI 316L	Installation Kit
		model	stroke (mm)	SPM	reduction	kW	hoses connection	
100	3	LM AP	1,5	175	10:1	0,37	R 3/8″	●
100	1,5	LM AP	1,5	87	20:1	0,37	R 3/8″	●
50	14	MM AP	2	175	10:1	0,37	R 1/2″	●
50	7	MM AP	2	87	20:1	0,37	R 1/2″	●
50	3,5	MM AP	2	44	40:1	0,37	R 1/2″	●
30	26	NM AP	2	175	10:1	0,37	R 1/2″	●
30	13	NM AP	2	87	20:1	0,37	R 1/2″	●
30	6	NM AP	2	44	40:1	0,37	R 1/2″	●
30	72	SM AP	4	175	10:1	0,37	R 1/2″	●
30	36	SM AP	4	87	20:1	0,37	R 1/2″	●
30	18	SM AP	4	44	40:1	0,37	R 1/2″	●
20	153	TM AP	6	175	10:1	0,37	R 3/4″	●
20	76	TM AP	6	87	20:1	0,37	R 3/4″	●
20	38	TM AP	6	44	40:1	0,37	R 3/4″	●

PRIUS D 60Hz Series | HIGH PRESSURE

PRIUS D 60Hz AP SINGLE-PHASE

bar	l/h	Pump Head				Motor	AISI 316L	Installation Kit
		model	stroke (mm)	SPM	reduction	kW	hoses connection	
100	3	LM AP	1,5	175	10:1	0,37	R 3/8″	●
100	1,5	LM AP	1,5	87	20:1	0,37	R 3/8″	●
50	14	MM AP	2	175	10:1	0,37	R 1/2″	●
50	7	MM AP	2	87	20:1	0,37	R 1/2″	●
50	3,5	MM AP	2	44	40:1	0,37	R 1/2″	●
30	26	NM AP	2	175	10:1	0,37	R 1/2″	●
30	13	NM AP	2	87	20:1	0,37	R 1/2″	●
30	6	NM AP	2	44	40:1	0,37	R 1/2″	●
30	72	SM AP	4	175	10:1	0,37	R 1/2″	●
30	36	SM AP	4	87	20:1	0,37	R 1/2″	●
30	18	SM AP	4	44	40:1	0,37	R 1/2″	●
20	153	TM AP	6	175	10:1	0,55	R 3/4″	●
20	76	TM AP	6	87	20:1	0,37	R 3/4″	●
20	38	TM AP	6	44	40:1	0,37	R 3/4″	●

PRIUS D 60Hz Series | ATEX 2G/2D

PRIUS D 60Hz THREE-PHASE ATEX 2G

bar	l/h	Pump Head				Motor	AISI 316L (II 2G Ex h IIC T3 Gb)	Installation Kit
		model	stroke (mm)	SPM	reduction	kW	hoses connection	
10	7	NM	1,5	35	40:1	0,37	R 1/2"	●
10	55	NM	3	175	10:1	0,37	R 1/2"	●
10	27	NM	3	70	20:1	0,37	R 1/2"	●
10	14	NM	3	35	40:1	0,37	R 1/2"	●
10	100	TM	3	175	10:1	0,37	R 1/2"	●
10	50	TM	3	87	20:1	0,37	R 3/4"	●
10	25	TM	3	44	40:1	0,37	R 3/4"	●
7	150	TM	4	175	10:1	0,37	R 3/4"	●
7	75	TM	4	87	20:1	0,37	R 3/4"	●
7	37	TM	4	44	40:1	0,37	R 3/4"	●
5	230	TM	6	175	10:1	0,37	R 3/4"	●
5	115	TM	6	87	20:1	0,37	R 3/4"	●
5	57	TM	6	44	40:1	0,37	R 3/4"	●

PRIUS D 60Hz THREE-PHASE ATEX 2D

bar	l/h	Pump Head				Motor	AISI 316L (II 2D Ex h IIIC T120° Db)	Installation Kit
		model	stroke (mm)	SPM	reduction	kW	hoses connection	
10	7	NM	1,5	35	40:1	0,43	R 1/2"	●
10	55	NM	3	175	10:1	0,43	R 1/2"	●
10	27	NM	3	70	20:1	0,43	R 1/2"	●
10	14	NM	3	35	40:1	0,43	R 1/2"	●
10	100	TM	3	175	10:1	0,43	R 1/2"	●
10	50	TM	3	87	20:1	0,43	R 3/4"	●
10	25	TM	3	44	40:1	0,43	R 3/4"	●
7	150	TM	4	175	10:1	0,43	R 3/4"	●
7	75	TM	4	87	20:1	0,43	R 3/4"	●
7	37	TM	4	44	40:1	0,43	R 3/4"	●
5	230	TM	6	175	10:1	0,43	R 3/4"	●
5	115	TM	6	87	20:1	0,43	R 3/4"	●
5	57	TM	6	44	40:1	0,43	R 3/4"	●

PRIUS D 60Hz Series | HIGH PRESSURE ATEX 2G/2D

PRIUS D 60Hz AP THREE-PHASE ATEX 2G

bar	l/h	Pump Head				Motor	AISI 316L (II 2G Ex h IIC T3 Gb)	Installation Kit
		model	stroke (mm)	SPM	reduction	kW	hoses connection	
100	3	LM AP	1,5	175	10:1	0,43	R 3/8″	●
100	1,5	LM AP	1,5	70	20:1	0,43	R 3/8″	●
50	14	MM AP	2	175	10:1	0,43	R 1/2″	●
50	7	MM AP	2	87	20:1	0,43	R 1/2″	●
50	3,5	MM AP	2	44	40:1	0,43	R 1/2″	●
30	26	MM AP	2	175	10:1	0,43	R 1/2″	●
30	13	MM AP	2	87	20:1	0,43	R 1/2″	●
30	6	MM AP	2	44	40:1	0,43	R 1/2″	●
30	72	SM AP	4	175	10:1	0,43	R 1/2″	●
30	36	SM AP	4	87	20:1	0,43	R 1/2″	●
30	18	SM AP	4	44	40:1	0,43	R 1/2″	●
20	153	TM AP	6	175	10:1	0,43	R 3/4″	●
20	76	TM AP	6	87	20:1	0,43	R 3/4″	●
20	38	TM AP	6	44	40:1	0,43	R 3/4″	●

PRIUS D 60Hz AP THREE-PHASE ATEX 2D

bar	l/h	Pump Head				Motor	AISI 316L (II 2D Ex h IIIC T120° Db)	Installation Kit
		model	stroke (mm)	SPM	reduction	kW	hoses connection	
100	3	LM AP	1,5	175	10:1	0,43	R 3/8″	●
100	1,5	LM AP	1,5	70	20:1	0,43	R 3/8″	●
50	14	MM AP	2	175	10:1	0,43	R 1/2″	●
50	7	MM AP	2	87	20:1	0,43	R 1/2″	●
50	3,5	MM AP	2	44	40:1	0,43	R 1/2″	●
30	26	MM AP	2	175	10:1	0,43	R 1/2″	●
30	13	MM AP	2	87	20:1	0,43	R 1/2″	●
30	6	MM AP	2	44	40:1	0,43	R 1/2″	●
30	72	SM AP	4	175	10:1	0,43	R 1/2″	●
30	36	SM AP	4	87	20:1	0,43	R 1/2″	●
30	18	SM AP	4	44	40:1	0,43	R 1/2″	●
20	153	TM AP	6	175	10:1	0,43	R 3/4″	●
20	76	TM AP	6	87	20:1	0,43	R 3/4″	●
20	38	TM AP	6	44	40:1	0,43	R 3/4″	●

PRIUS D 60Hz Series | ATEX 3G/3D

PRIUS D 60Hz THREE-PHASE ATEX 3G

bar	l/h	Pump Head				Motor	PVDF (II 3G Ex h IIC T3 Gc)	Installation Kit
		model	stroke (mm)	SPM	reduction	kW	hoses connection	
10	55	NM	3	175	10:1	0,25	/	A
10	27	NM	3	70	20:1	0,25	/	A
10	14	NM	3	35	40:1	0,25	/	A
10	100	TM	3	175	10:1	0,37	/	A
10	50	TM	3	87	20:1	0,37	/	A
10	25	TM	3	44	40:1	0,37	/	A
7	150	TM	4	175	10:1	0,37	/	A
7	75	TM	4	87	20:1	0,37	/	A
7	37	TM	4	44	40:1	0,37	/	A
5	230	TM	6	175	10:1	0,37	/	B
5	115	TM	6	87	20:1	0,37	/	B
5	57	TM	6	44	40:1	0,37	/	B
5	335	UMS	4	175	10:1	0,37	/	C
5	165	UMS	4	87	20:1	0,37	/	C
5	84	UMS	4	44	40:1	0,37	/	C
5	420	UMS	5	175	10:1	0,37	/	C
5	210	UMS	5	87	20:1	0,37	/	C
5	105	UMS	5	44	40:1	0,37	/	C
5	505	UMS	6	175	10:1	0,37	/	C
5	250	UMS	6	87	20:1	0,37	/	C
5	126	UMS	6	44	40:1	0,37	/	C

PRIUS D 60Hz THREE-PHASE ATEX 3G

bar	l/h	Pump Head				Motor	AISI 316L (II 3G Ex h IIC T3 Gc)	Installation Kit
		model	stroke (mm)	SPM	reduction	kW	hoses connection	
5	335	UMS	4	175	10:1	0,37	/	C
5	165	UMS	4	87	20:1	0,37	/	C
5	84	UMS	4	44	40:1	0,37	/	C
5	420	UMS	5	175	10:1	0,37	/	C
5	210	UMS	5	87	20:1	0,37	/	C
5	105	UMS	5	44	40:1	0,37	/	C
5	505	UMS	6	175	10:1	0,37	/	C
5	250	UMS	6	87	20:1	0,37	/	C
5	126	UMS	6	44	40:1	0,37	/	C

PRIUS D 60Hz Series | ATEX 3G/3D

PRIUS D 60Hz THREE-PHASE ATEX 3G

bar	l/h	Pump Head				Motor	PP (II 3G Ex h IIC T3 Gc)	Installation Kit
		model	stroke (mm)	SPM	reduction	kW	hoses connection	
10	55	NM	3	175	10:1	0,25	/	A
10	27	NM	3	70	20:1	0,25	/	A
10	14	NM	3	35	40:1	0,25	/	A
10	100	TM	3	175	10:1	0,37	/	A
10	50	TM	3	87	20:1	0,37	/	A
10	25	TM	3	44	40:1	0,37	/	A
7	150	TM	4	175	10:1	0,37	/	A
7	75	TM	4	87	20:1	0,37	/	A
7	37	TM	4	44	40:1	0,37	/	A
5	230	TM	6	175	10:1	0,37	/	B
5	115	TM	6	87	20:1	0,37	/	B
5	57	TM	6	44	40:1	0,37	/	B
5	335	UMS	4	175	10:1	0,37	/	C
5	165	UMS	4	87	20:1	0,37	/	C
5	84	UMS	4	44	40:1	0,37	/	C
5	420	UMS	5	175	10:1	0,37	/	C
5	210	UMS	5	87	20:1	0,37	/	C
5	105	UMS	5	44	40:1	0,37	/	C
5	505	UMS	6	175	10:1	0,37	/	C
5	250	UMS	6	87	20:1	0,37	/	C
5	126	UMS	6	44	40:1	0,37	/	C

PRIUS D 60Hz THREE-PHASE ATEX 3D

bar	l/h	Pump Head				Motor	PVDF (II 3D Ex h IIIC T120° Dc)	Installation Kit
		model	stroke (mm)	SPM	reduction	kW	hoses connection	
10	55	NM	3	175	10:1	0,29	/	A
10	27	NM	3	70	20:1	0,29	/	A
10	14	NM	3	35	40:1	0,29	/	A
10	100	TM	3	175	10:1	0,43	/	A
10	50	TM	3	87	20:1	0,43	/	A
10	25	TM	3	44	40:1	0,43	/	A
7	150	TM	4	175	10:1	0,43	/	A
7	75	TM	4	87	20:1	0,43	/	A
7	37	TM	4	44	40:1	0,43	/	A
5	230	TM	6	175	10:1	0,43	/	B
5	115	TM	6	87	20:1	0,43	/	B
5	57	TM	6	44	40:1	0,43	/	B
5	335	UMS	4	175	10:1	0,43	/	C
5	165	UMS	4	87	20:1	0,43	/	C
5	84	UMS	4	44	40:1	0,43	/	C
5	420	UMS	5	175	10:1	0,43	/	C
5	210	UMS	5	87	20:1	0,43	/	C
5	105	UMS	5	44	40:1	0,43	/	C
5	505	UMS	6	175	10:1	0,43	/	C
5	250	UMS	6	87	20:1	0,43	/	C
5	126	UMS	6	44	40:1	0,43	/	C

PRIUS D 60Hz Series | ATEX 3G/3D

PRIUS D 60Hz THREE-PHASE ATEX 3D

bar	l/h	Pump Head				Motor	AISI 316L (II 3D Ex h IIIC T120° Dc)	Installation Kit
		model	stroke (mm)	SPM	reduction	kW	hoses connection	
5	335	UMS	4	175	10:1	0,43	/	C
5	165	UMS	4	87	20:1	0,43	/	C
5	84	UMS	4	44	40:1	0,43	/	C
5	420	UMS	5	175	10:1	0,43	/	C
5	210	UMS	5	87	20:1	0,43	/	C
5	105	UMS	5	44	40:1	0,43	/	C
5	505	UMS	6	175	10:1	0,43	/	C
5	250	UMS	6	87	20:1	0,43	/	C
5	126	UMS	6	44	40:1	0,43	/	C

PRIUS D 60Hz THREE-PHASE ATEX 3D

bar	l/h	Pump Head				Motor	PP (II 3D Ex h IIIC T120° Dc)	Installation Kit
		model	stroke (mm)	SPM	reduction	kW	hoses connection	
10	55	NM	3	175	10:1	0,29	/	A
10	27	NM	3	70	20:1	0,29	/	A
10	14	NM	3	35	40:1	0,29	/	A
10	100	TM	3	175	10:1	0,43	/	A
10	50	TM	3	87	20:1	0,43	/	A
10	25	TM	3	44	40:1	0,43	/	A
7	150	TM	4	175	10:1	0,43	/	A
7	75	TM	4	87	20:1	0,43	/	A
7	37	TM	4	44	40:1	0,43	/	A
5	230	TM	6	175	10:1	0,43	/	B
5	115	TM	6	87	20:1	0,43	/	B
5	57	TM	6	44	40:1	0,43	/	B
5	335	UMS	4	175	10:1	0,43	/	C
5	165	UMS	4	87	20:1	0,43	/	C
5	84	UMS	4	44	40:1	0,43	/	C
5	420	UMS	5	175	10:1	0,43	/	C
5	210	UMS	5	87	20:1	0,43	/	C
5	105	UMS	5	44	40:1	0,43	/	C
5	505	UMS	6	175	10:1	0,43	/	C
5	250	UMS	6	87	20:1	0,43	/	C
5	126	UMS	6	44	40:1	0,43	/	C

1.5 Delivery curves

Flow rate indicated is for H_2O at 20°C at the rated pressure. Dosing accuracy ± 2% at rated pressure.

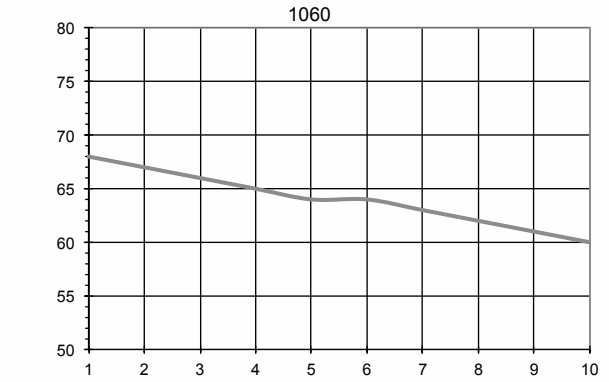

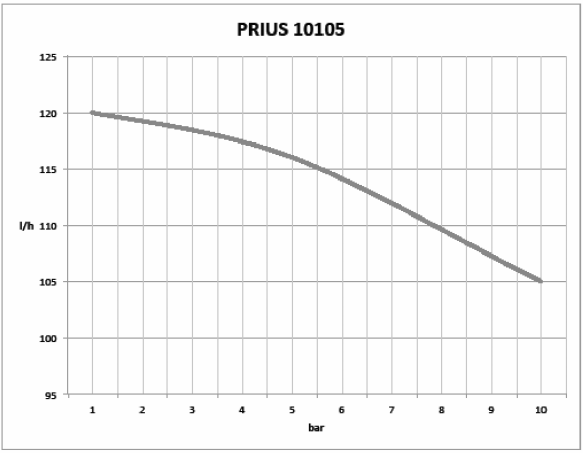

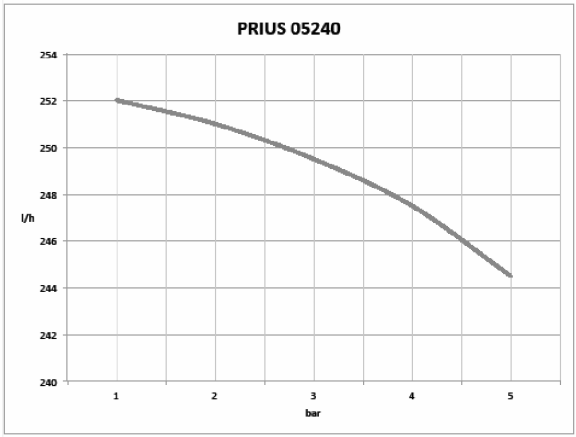
PRIUS 05240
254
252
250
248
l/h
246
244
242
240
1
2
3
4
5
bar

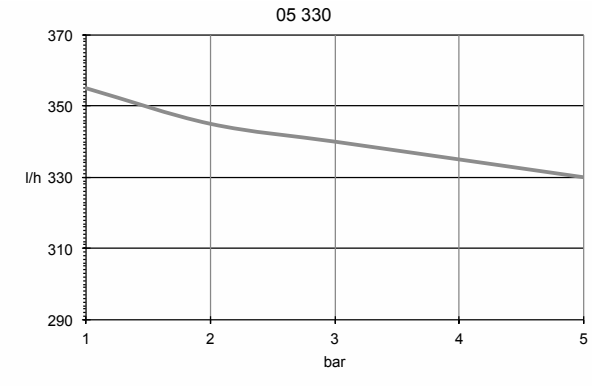
05 330
370
350
l/h 330
310
290
1
2
3
4
5
bar

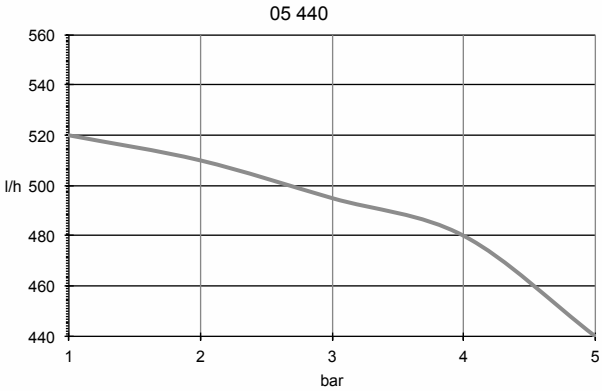
05 440
560
540
520
l/h 500
480
460
440
1
2
3
4
5
bar

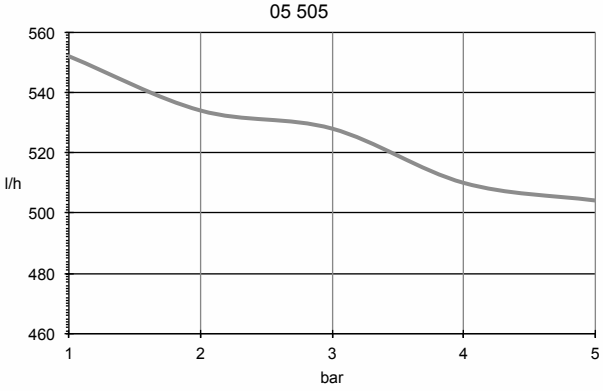
05 505
560
540
520
500
480
460
l/h
1
2
3
4
5
bar

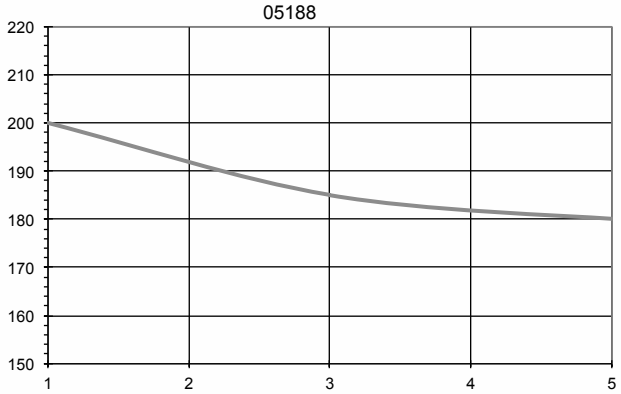
05188
220
210
200
190
180
170
160
150
1
2
3
4
5

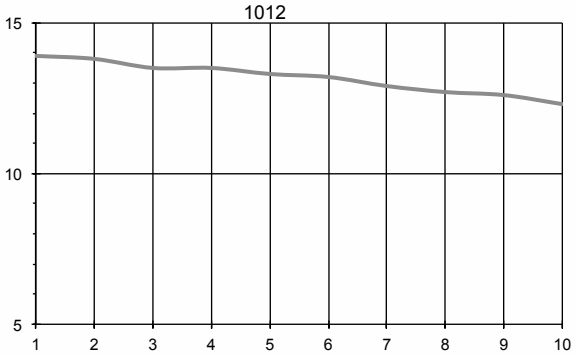
1012
15
10
5
1
2
3
4
5
6
7
8
9
10

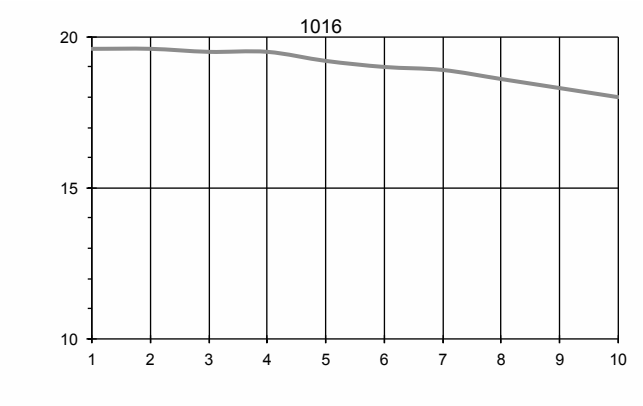
1016
20
15
10
1
2
3
4
5
6
7
8
9
10

2. INSTALLATION

2.1 Installation warning

Before start installation, the operator must be aware of safety precautions to prevent physical injury.

OPERATOR PROTECTION

Use safety equipment according to the company regulations.
Use this safety equipment within the work area during installation, service and when handling chemicals:

- **protective mask**
- **protective gloves**
- **safety goggles**
- **ear plugs or hear muffs**
- **further security device, if necessary.**

POWER SUPPLY DISCONNECTION

Always disconnect power to the motor before you perform any installation or maintenance tasks. Failure to disconnect power will result in serious physical injury.

INSTALLATION PUMP GUIDELINES

Install the pump
- in a safety place and fixed to the table / wall to avoid vibration problems;
- in an easy accessible place;
- in horizontal position.

Use only hoses compatibles with product to dose.

See "8.1 Chemical compatibility table" page 31.
If dosing product is not listed please consult full compatibility table or contact chemical's manufacturer.

2.2 Commissioning steps

5 steps of installation procedure:

1. Pump location
2. Oil filling
3. Piping connection
4. Electric wiring
5. Start-up

2.2.1 Pump location

Pump must be installed on a flat base at max **3 m** height from tank's bottom.
Fasten the pump by clamping screws.

Injection point must be higher of tank to avoid accidental chemical injection.

Otherwise, connect a **multifunction valve** on delivery pipeline.

2.2.2 Oil filling

Pumps are shipped WITH OIL AND WITH A BLIND CAP.
At the job site you must replace the blind cap with the one supplied. Keep the blind cap for further shipping.

Fill the oil reservoir through oil inlet ("Fig. 1. PRIUS pump" page 6).
The required amount of oil is 0,30 lt. For acceptable lubricants see the table below.
Check oil level regularly. Change the oil every 8.000-10.000 operating hours.

You must never start the pump without oil.

Tab. 3. Acceptable oil for lubricating

BRAND	LUBRICANT TYPE
MOBIL	MOBILGEAR 632
SHELL	OMALA OIL 320
BP	ENERGOL GR-XP 320
IP	MELLANA OIL 320
ESSO	SPARTAN EP 320
AGIP	BLASIA 320

2.2.3 Piping connection

Never operate any pumping system with a blocked suction and discharge. Operation, even for a brief period under these conditions, can cause motor to overheat. You must take all necessary measures to avoid this condition.

Suction piping should be as short as possible and installed in vertical position to avoid air bubbles suction.

Fig. 3. Hose connections

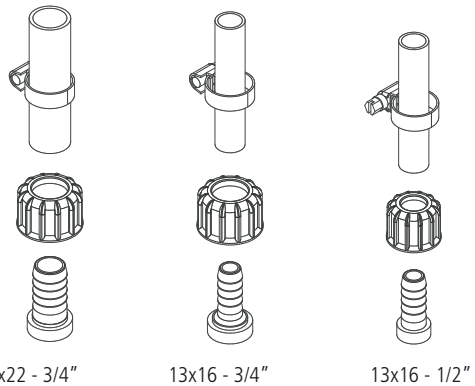

Suction and delivery valves must be installed in vertical position.

Hand-tighten the nuts firmly.
Do not use tongs or any other tool.

Delivery hose must be firmly fixed to avoid suddenly movements that could damage near objects

2.2.4 Pump head

Pump head has got manual venting by opening discharge knob.

For priming procedure see "5. PRIMING" page 27.

It's allowed to lightly bend discharge hose.

During calibration procedure ("TEST") insert discharge hose into BECKER test-tube.

2.2.5 Foot filter

Foot filter is always recommended.
Foot filter should be adequate to suction piping and installed al least 10 cm from the tank bottom.

2.2.6 Installation drawings

Fig. 4. Installation drawings

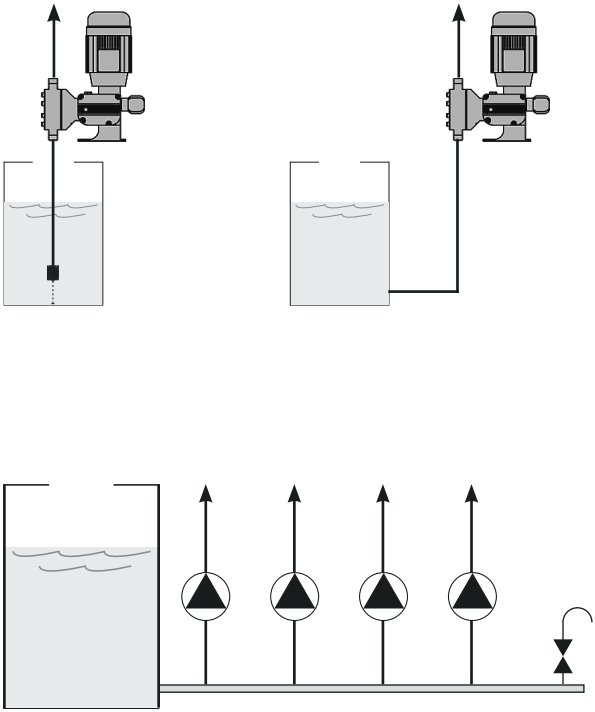

3. ELECTRICAL WIRING

3.1 Preliminary checks

The electrical wirings should be carried out by AUTHORIZED AND QUALIFIED PERSONNEL only in accordance with local regulations.

Before to proceed, verify the following steps:

1. **Verify the data on nameplate.**
   Make sure that the electrical data on the nameplate of the motor corresponds to the electrical supply.

2. **Verify the grounded power outlet.**
   The pump must be plugged to a grounded power outlet.

3. **Install a motor protection switch.**
   Pump must be connected to a motor protection switch (Residual Current Circuit Breaker - MCCB).

4. **Verify the cable.**
   Cable type and cross-section must be in accordance to motor data.

5. **Verify the motor rotation.**
   Start up the pump to check the motor's direction of rotation. It must comply with that indicated by the arrow marked on the motor fan cover. If the direction is reversed, rewire the motor power wires in accordance with the wiring diagram, refer to "3.2 Connection diagrams" page 24.

3.2 Connection diagrams

CONNECTION DIAGRAMS for 3~PHASE MOTOR 50 Hz

"Y" CONNECTION
380-420 Vac

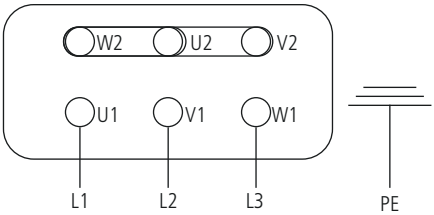

"Δ" (DELTA) CONNECTION
220-240 Vac

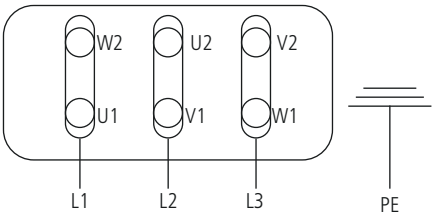

CONNECTION DIAGRAMS for 1~PHASE MOTOR

⚠ MOTOR SUITABLE FOR INSERTIONS WITH RANGE OF AT LEAST 6” INTERVAL

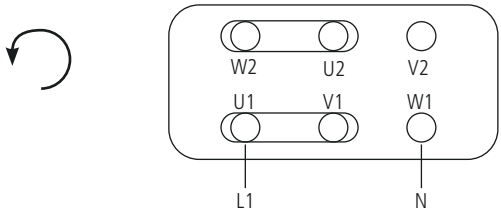

4. START UP

4.1 Start up

All operation before described must be carried out before starting the pump.

1. Pump location
2. Oil filling
3. Piping connection
4. Electric wiring

Follow the **"GENERAL SAFETY GUIDELINES" PAGE 4**.

1. Start the pump at minimum pressure.
2. Turn the stroke lenght knob on 20%.
3. After 5 minutes, gradually increase the capacity until reaching the prescribed value for the operating condition.

⚠ **Control the pressure correspond to the one on the nameplate. If not, stop the pump immediatly.**

If the pump does not start to dose:
a) Stop the pump.
b) Prime the pump head ("5. PRIMING" PAGE 27)
c) Start the pump again.

4. Monitor periodically the pump functioning.

5. PRIMING

5.1 How to prime the pump

The first time and where use of the pump is suspended for a long period of time, priming may be necessary. It allows suction piping and pump head to fill with liquid before pumping against pressure.

1. Connect all pipings (suction, delivery and discharge).
2. Rotate discharge knob to open discharge valve.
3. Rotate stroke lenght knob on 100%;
4. Power the pump.
5. When the chemical starts to flow into discharge hose, close discharge knob.
6. Proceed to standard operating condition.

Priming the pump is also recommended when there is air into pump head or into suction pipe.

6. MAINTENANCE

6.1 Maintenance schedule

Before start maitenance, the operator must be aware of safety precautions to prevent physical injury.

OPERATOR PROTECTION
Use safety equipment according to the company regulations.
Use this safety equipment within the work area during installation, service and when handling chemicals:

- **protective mask**
- **protective gloves**
- **safety goggles**
- **ear plugs or hear muffs**
- **further security device, if necessary.**

POWER SUPPLY DISCONNECTION
Always disconnect power to the motor before you perform any installation or maintenance tasks. Failure to disconnect power will result in serious physical injury.

Installation and maintenance tasks should be carried out by AUTHORIZED AND QUALIFIED PERSONNEL only in accordance with local regulations.

Before starting any maintenance or before long downtimes, drain the chemical from pump head.

Use original spare parts.

6.2 Maintenance inspection

A maintenance schedule includes these types of inspections:

- Routine maintenance and inspoections
- Three-month inspections
- Annual inspections

Shorten the inspection intervals appropriately if the pumped chemical is abrasive or corrosive.

Routine maitenance and inspections

Perform these tasks whenever you perform routine maintenance:

- Inspect the seal. Ensure that there are no leaks from the mechanical seal.
- Check electrical wiring
- Check the level and condition of the oil through the sight glass
- Check for unusual noise and vibration (noise allowed 78 dbA; ± 5 dB).
- Check the pump and piping for leaks.
- Inspect the discharge pressure.
- Check temperature (motor temperature max 70°C; pump head max 40°C)
- Check for corrosion on parts of the pump and / or on hoses.

Three-month inspections

Perform these tasks every three months:

- Check that the bolts are tight.
- Check the mechanical seal if the pump has been left idle.

Annual inspections

Perform these inspections one time each year:

- Check the pump capacity (as per nameplate).
- Check the pump pressure (as per nameplate).
- Check the pump power (as per nameplate).
- Change the oil every year (8.000-10.000 operating hours).
- Change the oil more often if there are adverse conditions

If the pump performance does not satisfy your process requirements, and the process requirements have not changed, then perform these steps:

1. Disassemble the pump.
2. Inspect it.
3. Replace worn parts.

6.3 Shutdown

Shutdown the dosing pump before any maintenance operation or before long downtimes.
Disconnect power to the motor and ensure it cannot be restarted.
Drain the chemical from pump head.
Release the pressure and disconnect the disharge pipe from the discharge valve.
Rinse the pump head and clean all valves.

7. TROUBLESHOOTING

Tab. 4. Guide to troubleshooting.

PROBLEM	CAUSE	REMEDY
Dosing pump not delivering or output too low	Suction valve leaking or blocked	Clean or replace suction valve
	Suction pipe leaking or blocked	Replace suction pipe
	Air bubbles into pump head or into suction pipe	Prime the pump as described in "5.1 How to prime the pump" page 27
	Viscosity too high	Increase the pipe diameter or contact manufacturer
	Suction lift too high	Decrease lift
	Foot filter obstruction	Clean the foot filter
Motor and pump head too hot	Wrong wiring or defecting contact	Check wiring
	Pressure too high	Install a valve
	Delivery pipe obstructed or blocked	Clean delivery pipe
	Low level oil	Refill oil
Liquid loss	Diaphragm rupture	Contact manufacturer for diaphragm replacement

If the problem can not be solved, please contac after-sales service or return the dosing pump to the manufacturer.

7.1 Repair service

Before return the dosing pump to the manufacturer Repair service, drain the chemical from pump head and rinse it.
If there is the possibility that residual corrosive liquid into pump head could cause damages, declare it on REPAIR FORM.

Remove oil and replace operating cap with the blind cap.

Complete the PRODUCT SERVICE REPAIR FORM and send it with the dosing pump.
Repair service is not accepted if PRODUCT SERVICE REPAIR FORM is missing.

8. COMPATIBILITY TABLE

8.1 Chemical compatibility table

Solenoid driven metering pumps are widely used to dose chemical fluids and it is important that the most suitable material in contact with fluid is selected for each application. This compatibility table serves as a useful help in this respect. All the informations in this list are verified periodically and believed to be correct on the date of issuance. All the informations in this list are based on manufacturer's data and its own experience but since the resistance of any material depends by several factors this list is supplied only as an initial guide, in no way manufacturer makes warranties of any matter respect to the informations provided in this list.

Tab. 5. Chemical compatibility table.

Product	Formula	Ceram.	PVDF	PP	PVC	SS 316	PMMA	Hastel.	PTFE	FPM	EPDM	NBR	PE
Acetic Acid, Max 75%	CH3COOH	2	1	1	1	1	3	1	1	3	1	3	1
Hydrochloric Acid, Concentrate	HCl	1	1	1	1	3	1	1	1	1	3	3	1
Hydrofluoric Acid 40%	H2F2	3	1	3	2	3	3	2	1	1	3	3	1
Phosphoric Acid, 50%	H3PO4	1	1	1	1	2	1	1	1	1	1	3	1
Nitric Acid, 65%	HNO3	1	1	2	3	2	3	1	1	1	3	3	2
Sulphuric Acid, 85%	H2SO4	1	1	1	1	2	3	1	1	1	3	3	1
Sulphuric Acid, 98.5%	H2SO4	1	1	3	3	3	3	1	1	1	3	3	3
Amines	R-NH2	1	2	1	3	1	-	1	1	3	3	1	1
Sodium Bisulphite	NaHSO3	1	1	1	1	2	1	1	1	1	1	1	1
Sodium Carbonate (Soda)	Na2CO3	2	1	1	1	1	1	1	1	2	1	1	1
Ferric Chloride	FeCl3	1	1	1	1	3	1	1	1	1	1	1	1
Calcium Hydroxide (Slaked Lime)	Ca(OH)2	1	1	1	1	1	1	1	1	1	1	1	1
Sodium Hydroxide (Caustic Soda)	NaOH	2	3	1	1	1	1	1	1	2	1	2	1
Calcium Hypochlor.(Chlor. ted Lime)	Ca(OCl)2	1	1	1	1	3	1	1	1	1	1	3	1
Sodium Hypochlorite, 12.5%	NaOCl + NaCl	1	1	2	1	3	1	1	1	1	1	2	3
Potassium Permanganate, 10%	KMnO4	1	1	1	1	1	1	1	1	1	1	3	1
Hydrogen Peroxide, 30% (Perydrol)	H2O2	1	1	1	1	1	3	1	1	1	3	3	1
Aluminium Sulphate	Al2(SO4)3	1	1	1	1	1	1	1	1	1	1	1	1
Copper-II-Sulphate (Roman Vitriol)	CuSO4	1	1	1	1	1	1	1	1	1	1	1	1

1 - Good resistance rating

2 - Fairly resistance rating

3- Not resistant

8.2 Materials

Polyvinyldene fluoride (PVDF) .....Pump heads, Valves, Fittings
Polypropylene (PP).....Pump heads, Valves, Fittings
Stainless steel (SS 316).....Pump heads, Valves
Polymethyl Metacrilate Acrylic (PMMA) ...Pump heads
Polytetrafluoroethylene (PTFE) .....Diaphragm
Fluorocarbon (FPM).....O-ring
Ethylene propylene (EPDM).....O-ring
Nitrile (NBR).....O-ring

9. UMS PUMP HEAD VERSION

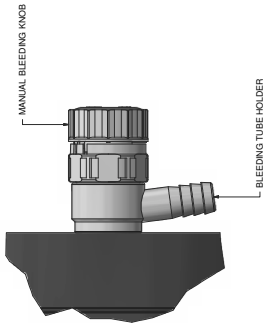

During tightening of the ring nut on the UMS pump body valve, hold the valve steady with one hand and tighten the ring nut with the other to prevent rotation or mechanical stress. Tighten by hand only; do not use tools.

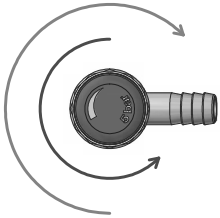

SAFETY — TURN RIGHT

BLEEDING — TURN LEFT

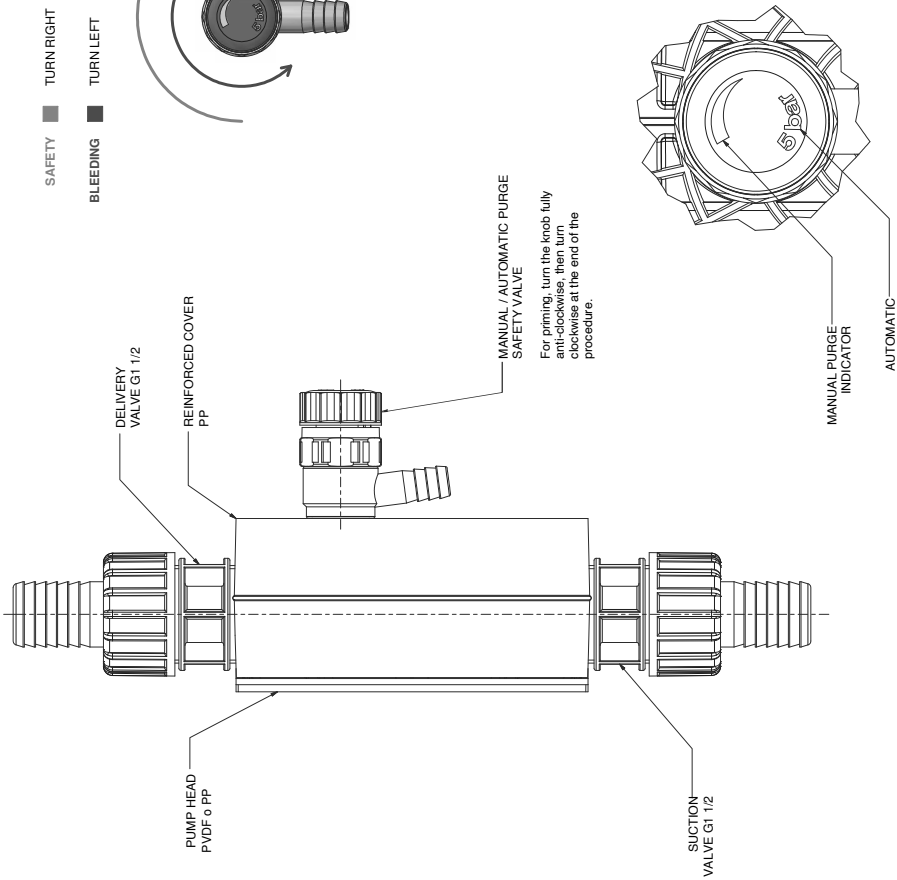

9.1. DIMENSIONS (MM) PRIUS WITH UMS PUMP HEAD (0,37KW)

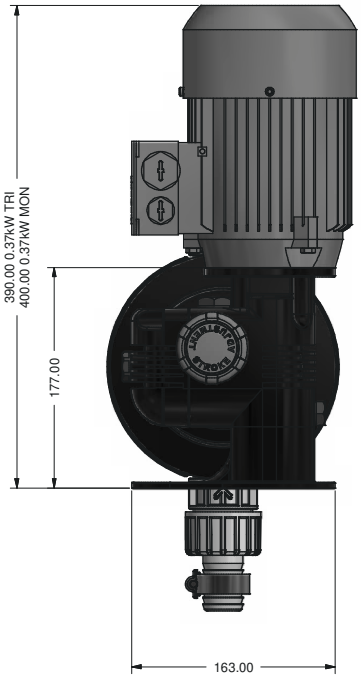

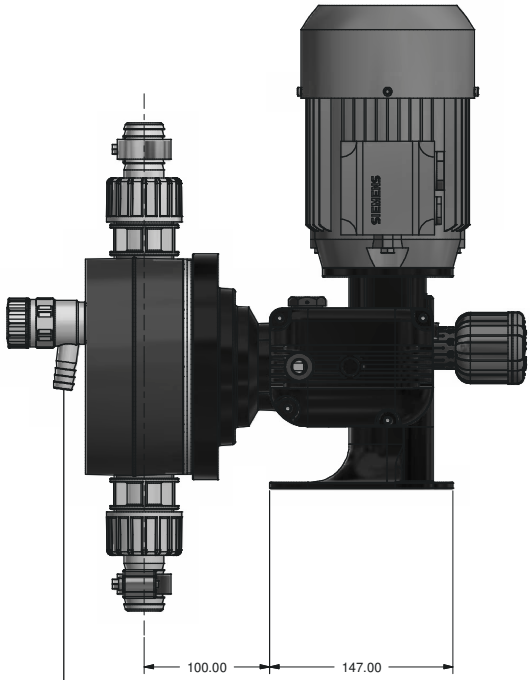

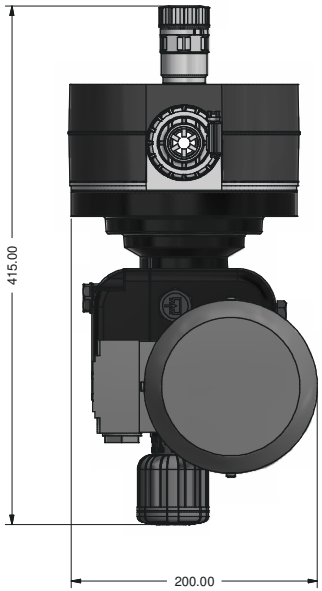

WARNING: AUTOMATIC PURGE VALVE FOR HIGH PRESSURE. CONNECT THE EXHAUST PIPE 16X22 PVC AND INSERT THE OTHER END IN THE TANK OF THE PRODUCT TO BE DOSED. THE EXHAUST PIPE MUST BE FIXED AND NOT LEFT FREE TO MOVE.

9.2. DIMENSIONS (MM) PRIUS WITH UMS PUMP HEAD (0,55KW)

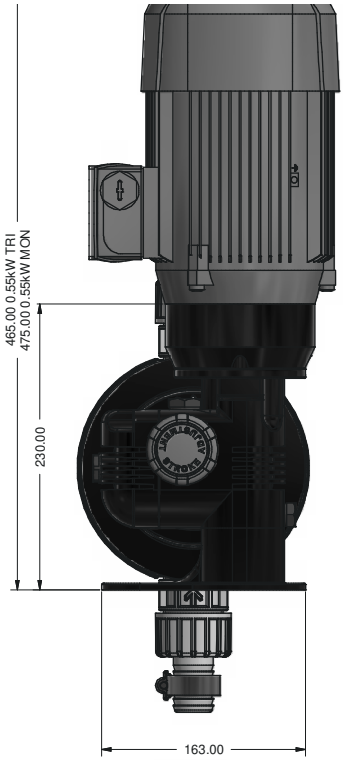

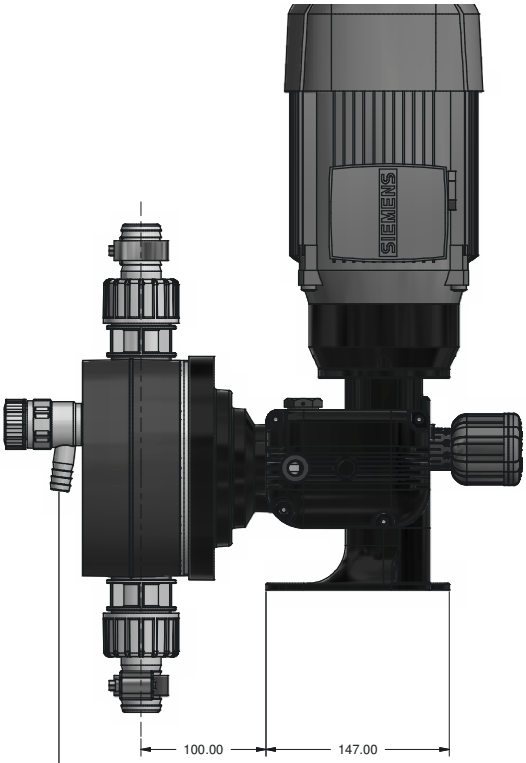

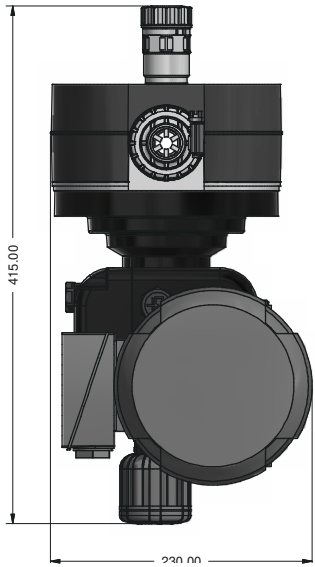

WARNING: AUTOMATIC PURGE VALVE FOR HIGH PRESSURE. CONNECT THE EXHAUST PIPE 16X22 PVC AND INSERT THE OTHER END IN THE TANK OF THE PRODUCT TO BE DOSED. THE EXHAUST PIPE MUST BE FIXED AND NOT LEFT FREE TO MOVE.

PRODUCT SERVICE REPAIR FORM

ENCLOSE THE PRESENT FORM TO THE DELIVERY NOTE

DATE .....

SENDER

Company name.....

Address .....

Phone no. .....

Contact person.....

PRODUCT TYPE (see product label)

DEVICE CODE .....

S/N (serial number).....

OPERATING CONDITIONS

Location/installation description .....

.....

Chemical .....

Start-up (date) ..... Running time (approx. hours).....

REMOVE ALL THE LIQUID INTO THE PUMP HEAD AND DRY IT BEFORE PACKAGING IN ITS ORIGINAL BOX.

DESCRIPTION OF PROBLEM

☐ MECHANICAL

- Wear parts.....
- Brekage/other damages .....
- Corrosion.....
- Other.....

☐ ELECTRICAL

- Connections, connector, cables .....
- Operating controls (keyboard, display, etc.) .....
- Elettronics.....
- Other.....

☐ LEAKS

- Connections.....
- Pump head .....

☐ NOT OR INADEQUATE FUNCTION/OTHER

.....

.....

.....

I declare that the dosing pump is free of any hazardous chemical.

Signature of the compiler

Company stamp

PRECAUTIONS RELATING TO DIRECTIVES, REGULATIONS AND STANDARDS

§ CE/EU and UKCA marking

We guarantee that this product meets the essential requirements of the applicable Directives and Regulations based on the following specifications. Please carefully consider the following specifications for use of the product in European Union member countries and the United Kingdom.

• CE/EU harmonized directives and standards

Directives
DIRECTIVE 2006/42/EC
DIRECTIVE 2014/35/EU
DIRECTIVE 2014/30/EU
DIRECTIVE 2011/65/EU
DELEGATED DIRECTIVE (EU) 2015/863

Harmonized standards
EN ISO 12100
EN 809
EN ISO 20361
EN IEC 61326-1
EN 61010-1
EN IEC 63000

• UKCA harmonized regulations and standards

Regulations
2008 No. 1597
2008 2016 No. 1091
2016 No. 1101
2012 No. 3032

Harmonized standards
BS EN ISO 12100
BS EN 809
BS EN ISO 20361
BS EN IEC 61326-1
BS EN 61010-1
BS EN IEC 63000

§ Other compliances

Decree 6 April 2004, n. 174 of the Ministry of Health (Gazzetta Ufficiale n. 166 of 17-7-2004)
Decree 7 February 2012, n.25 of the Ministry of Health (Gazzetta Ufficiale n. 166 of 17-7-2004)

Disposal of end-of-life equipment by users

This symbol warns you not to dispose of the product with normal waste. Respect human health and the environment by giving the discarded equipment to a designated collection center for the recycling of electronic and electrical equipment. For more information visit the online site.

When dismantling a pump please separate material types and send them according to local recycling disposal requirements. We appreciate your efforts in supporting your local Recycle Environmental Program. Working together we'll form an active union to assure the world's invaluable resources are conserved.