“AMS AC” series Metering Pumps

Data Sheet

- Compressed air driven metering pump
- 230 VAC and compressed air power supply
- Stroke frequency adjustment
- Manual venting PVDF pump head
- All liquid ends (pump head, injection valve, foot filter, delivery hose) are in PVDF

Power supply:	230 VAC (190–265 VAC) - 50/60 Hz 115 VAC (90–135 VAC) - 50/60 Hz 24 VAC (20–32 VAC) - 50/60 Hz 12 VDC (10–16 VDC) 24 VDC (20-32 VDC)
Compressed air:	6–10 bar (compressed air without lubrificant and/or condensed water)
Suction air pressure:	7 bar
Pump Strokes	0–120
Environment Temperature:	0–45°C (32–113°F)
Chemical Temperature:	0–50°C (32–122°F)
Packaging and Transporting Temperature:	-10–+50°C (14–122°F)
Installation Class:	II
Pollution Level:	2
Audible Noise:	78.3 db(A)
Protection Degree Rating:	IP65
Max operating altitude:	2000m

Configuration code

Model A OA 1050 V 00 00

MODELS		
Code AMS AC	**MOD.**	**DESCRIPTION**
OA	AMS AC CO	Constant pump with stroke speed (frequency) adjustment.
LA	AMS AC CL	Constant pump with level control, stroke speed (frequency) adjustment and stroke length adjustment.
MC	AMS AC MF	• **MULTIFUNCTION** (Constant, Divide, Multiply, PPM, Batch, Volt, mA, %, ml/q) • Set **AUTOMATIC REPRIMING**, with a flow sensor installed. • Set **STROKES RECOVERY SYSTEM**, with a flow sensor installed. • Set **UPKEEP DOSING MODE** in plant shutdown situation. • **WORK-PAUSE MODE**: cyclic dosing controlled by an external contact.

CAPACITIES					
Models			**PVDF injection hose**	**Suction hose**	**Air supply fitting**
1050	50 l/h against 10 bar	13.2 GPH against 145 PSI	8 x 10	8 x 12	6 x 8
05140	140 l/h against 5 bar	37 GPH against 72 PSI	13 x 16	12 x 18	6 x 8
00220	220 l/h against 0 bar	58.1 GPH against 0 PSI	13 x 16	12 x 18	6 x 8

POWER SUPPLY	
00	230 VAC Schuko plug
0S	230 VAC australian plug
01	230 VAC without plug
03	115 VAC US plug
04	24 VAC without plug
05	12 VDC *
07	24 VDC
* On some models only.	

LIQUID ENDS								
	HEAD	**ORINGS**	**VALVE**		**DIAPHRAGM**	**HOSES**		**VISCOSITY**
			Body	Balls		Delivery	Suction	Max CPS
K	PVDF	FKM B	PVDF	Ceramic	PTFE	PVDF	PVC	100
P	PVDF	EPDM	PVDF	Ceramic	PTFE	PVDF	PVC	100
W	PVDF	Nytrile	PVDF	Ceramic	PTFE	PVDF	PVC	100
T	PVDF	FKM B + PTFE	PVDF	Ceramic	PTFE	PVDF	PVC	100
S	PVDF	Silicone	PVDF	Ceramic	PTFE	PVDF	PVC	100
A	Acrylic	FKM B	Polypropylene	Ceramic	PTFE	PVDF	PVC	100
Z	SS	FKM B	SS	SS	PTFE	N/A	N/A	100

Via Donatori di Sangue, 1 - 02100 Rieti (Italy)
+39 074622841 | emecpumps.com

emec SIMPLE AS WATER

IQNET CERTIFIED MANAGEMENT SYSTEM
qualityaustria SYSTEM CERTIFIED
ISO 9001:2015 No.07728/0
ISO 14001:2015 No.00997/0
ISO 45001:2018 No.01121/0

“AMS AC” series Metering Pumps

Data Sheet

INFORMATION FOR AMS AC CO AND AMS AC CL MODELS									
Models	Strokes per minute		Stroke length range reliability	Power consumption at (230 VAC)	Power consumption at (115 VAC)	Power consumption at (24 VAC)	Weight	Air consumption l/min	Air supply bar
	min	max							
1050	12	120	from 30% to 100%	1 Watt	1 Watt	1 Watt	4,5 Kg (9.92 Lbs)	20	7
05140	12	120						30	7
00220	12	120						30	7

INFORMATION FOR AMS AC MF MODELS									
Models	Strokes per minute		Stroke length range reliability	Power consumption at (230 VAC)	Power consumption at (115 VAC)	Power consumption at (24 VAC)	Weight	Air consumption l/min	Air supply bar
	min	max							
1050	1	120	from 30% to 100%	7 Watt	7 Watt	7 Watt	4,5 Kg (9.92 Lbs)	30	7
05140	1	120						30	7
00220	1	120						30	7

MORE INFORMATION ABOUT AMS AC CO AND AMS AC CL MODELS									
Model	FLOW				cc per STROKE		Maximum injection pressure		Pump Head
	min cc/h	max l/h	Min GPH	Max GPH	min	max	bar	PSI	
1050	1500	50	0,3963	13,21	2,08	6,94	10	145	N
05140	4200	140	1,11	36,97	5,83	19,44	5	72,5	T
00220	6600	220	1,74	58,1	9,2	30,56	0	0	T

MORE INFORMATION ABOUT AMS AC MF MODELS									
Model	FLOW				cc per STROKE		Maximum injection pressure		Pump Head
	min cc/h	max l/h	Min GPH	Max GPH	min	max	bar	PSI	
1050	2,08	50	0,55	13,21	2,08	6,94	10	145	N
05140	5,83	140	1,54	36,97	5,83	19,44	5	72,5	T
00220	9,17	220	2,42	58,1	9,17	30,56	0	0	T

“T” PUMP HEAD

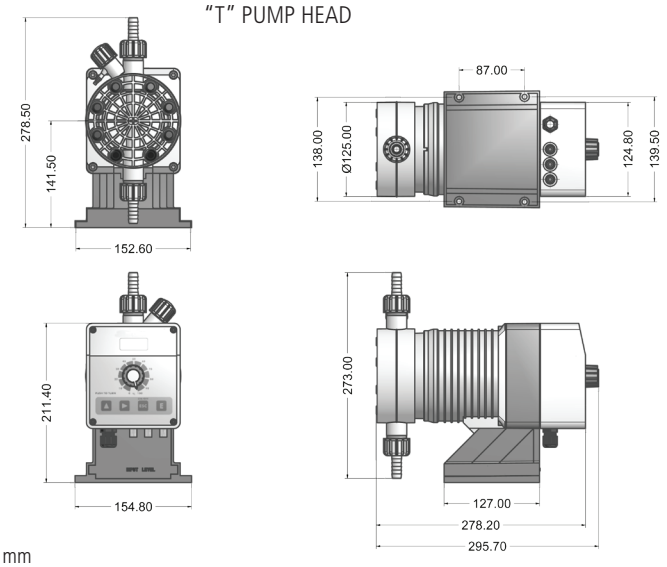

“N” PUMP HEAD

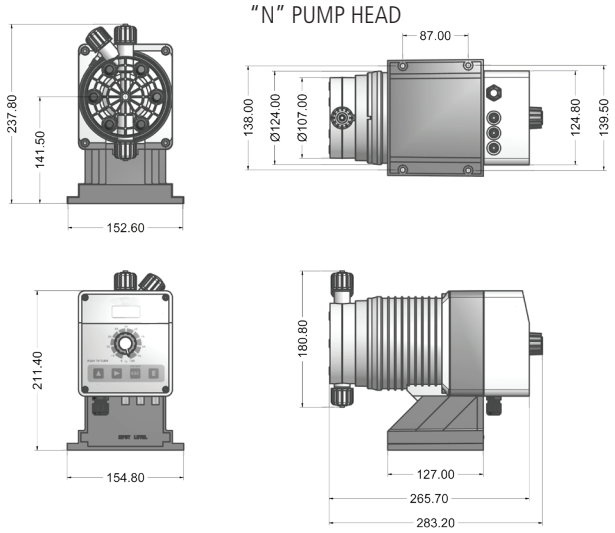

mm

Via Donatori di Sangue, 1 - 02100 Rieti (Italy)
+39 074622841 | emecpumps.com

Specifications subject to change without notice | R2025

emec SIMPLE AS WATER

IQNET CERTIFIED MANAGEMENT SYSTEM
qualityaustria SYSTEM CERTIFIED
ISO 9001:2015 No.07728/0
ISO 14001:2015 No.00997/0
ISO 45001:2018 No.01121/0