"K PLUS" series metering pumps

Data Sheet

R100523

- Foot mounted
- Microprocessor technology
- Constant or proportional feeding
- Manual stroke length adjustment
- Manual venting (K) or self venting (KA) pump head
- Enclosure .....PP
- Environment temperature.....10-45°C (55-113°F)
- Chemical temperature.....0-50°C (32-122°F)
- Transportation and storage temperature .....-10-50°C (14-122°F)
- Altitude .....2000 m
- Installation class II
- Pollution level.....2
- Audible noise.....73.4 db(A)
- Protection degree .....IP65 (% working RU: 85% T<=40°C; 70% T=50°C - without condensing water)

CE

c UL us LISTED (on request)

Configuration Code

MODELS			
Code K	Code KA	MOD.	DECRIPTION
MU	**AU**	K PLUS	Constant proportional pump with level control. Working mode: - constant - constant with divider (1/10) - pulse divider (1/10; 10/100; 100/1000) - pulse multiplier (1/10) - mA signal current (0/4 mA = 0 pulses: 20mA = max pulses)
PO	**PA**	KCO PLUS	Constant pump with speed reducer (1/10)
PL	**UA**	KCL PLUS	Constant pump with level control. Speed reducer (1/10)

CAPACITIES				
K			**Hoses**	**Pump head**
2001	1 l/h at 20 bar	0.26 GPH at 290 PSI	4 x 6	I
1802	2 l/h at 18 bar	0.53 GPH at 261 PSI	4 x 6	L
1504	4 l/h at 15 bar	1.06 GPH at 217 PSI	4 x 6	L
1005	5 l/h at 10 bar	1.32 GPH at 102 PSI	4 x 6	L
0808	8 l/h at 8 bar	2.11 GPH at 116 PSI	4 x 6	L
0510	10 l/h at 5 bar	2.64 GPH at 58 PSI	4 x 6	L
0218	18 l/h at 2 bar	4.76 GPH at 29 PSI	6 x 8	M
KA			**Hoses**	**Pump head**
1801	1 l/h at 18 bar	0.26 GPH at 261 PSI	4 x 6	LA
1503	3 l/h at 15 bar	0.79 GPH at 217 PSI	4 x 6	LA
103.5	3.5 l/h at 10 bar	0.92 GPH at 102 PSI	4 x 6	LA
100.5	0.5 l/h at 10 bar	0.13 GPH at 102 PSI	4 x 6	JA
085.5	5.5 l/h at 8 bar	1.45 GPH at 116 PSI	4 x 6	LA
057.5	7.5 l/h at 5 bar	1.98 GPH at 58 PSI	4 x 6	LA
0213	13 l/h at 2 bar	3.43 GPH at 29 PSI	6 x 8	MA

Model K MU 2001 K 00 00

LIQUID ENDS								
	HEAD	**ORINGS**	**VALVE**		**DIAPHRAGM**	**HOSES [1]**		**VISCOSITY**
			Body	Balls		Delivery	Suction	Max CPS
K	PVDF	FKM B	PVDF	Ceramic	PTFE	PVDF	PVC	100
P	PVDF	EPDM	PVDF	Ceramic	PTFE	PVDF	PVC	100
Y	PVDF	Nytrile	PVDF	Ceramic	PTFE	PVDF	PVC	100
V	PP	FKM B	PP	Ceramic	PTFE	PVDF	PVC	100
D	PP	EPDM	PP	Ceramic	PTFE	PE	PVC	100
W	PP	Nytrile	PP	Ceramic	PTFE	PE	PVC	100
J	PVDF	FKM B + PTFE	PVDF	Ceramic	PTFE	PVDF	PVC	100
M	PVDF	EPDM + PTFE	PVDF	Ceramic	PTFE	PVDF	PVC	100
A	Acrylic	FKM B	PVDF	Ceramic	PTFE	PVDF	PVC	100
Z	SS	FKM B	SS	SS	PTFE	N/A	N/A	100
$	Acrylic	FKM B	PP	SS + Hastelloy spring	PTFE	PP	PVC	8000 [2]

[1] Size may be different from standard.

POWER SUPPLY	
00	230 VAC Schuko plug
0S	230 VAC australian plug
01	230 VAC without plug
03	115 VAC US plug
04	24 VAC without plug
05	12 VDC *
07	24 VDC

* On some models only.

Via Donatori di Sangue, 1 - 02100 Rieti (Italy)
+39 074622841 | emecpumps.com

emec SIMPLE AS WATER

IQNET CERTIFIED MANAGEMENT SYSTEM

qualityaustria SYSTEM CERTIFIED
ISO 9001:2015 No.07728/0
ISO 14001:2015 No.00997/0
ISO 45001:2018 No.01121/0

Specifications subject to change without notice | R2025

Technical features

INFORMATION FOR K PLUS								
Models	Strokes speed		Stroke length range reliability	Power consumption at max flow (230 VAC)	Power consumption at max flow (115 VAC)	Power consumption at max low (24 VAC/ 24VDC)	Power consumption at max low (12 VDC)	Weight
	min	max						
2001	18	180	from 30% to 100%	19 Watt	24 Watt	12 Watt	8.8 Watt	4.1 Kg (9.02 Lbs)
1802	18	180						
1504	18	180						
1005	18	180						
0808	18	180						
0510	18	180						
0501	18	180						
0218	18	180						
INFORMATION FOR KA MODELS								
1801	18	180	from 30% to 100%	19 Watt	24 Watt	12 Watt	8.8 Watt	4.1 Kg (9.02 Lbs)
1503	18	180						
103.5	18	180						
100.5	18	180						
085.5	18	180						
057.5	18	180						
0213	18	180						

CAPACITY								
K PLUS	FLOW				cc per STROKE		Maximum pressure	
	min cc/h	max l/h	Min GPH	Max GPH	min	max	bar	PSI
2001	30	1	0,01	0,26	0,03	0,09	20	290
1802	60	2	0,02	0,53	0,06	0,19	18	261
1504	120	4	0,03	1,1	0,1	0,37	15	217,5
1005	150	5	0,04	1,3	0,1	0,46	10	145
0808	240	8	0,06	2,1	0,2	0,74	8	116
0510	300	10	0,08	2,6	0,3	0,93	5	72,5
0501	30	1	0,01	0,3	0	0,09	5	72,5
0218	540	18	0,14	4,8	0,5	1,67	2	29

CAPACITY								
KA PLUS	FLOW				cc per STROKE		Maximum pressure	
	min cc/h	max l/h	Min GPH	Max GPH	min	max	bar	PSI
1801	30	1	0,01	0,26	0,03	0,09	18	261
1503	90	3	0,02	0,79	0,08	0,28	15	217,5
103.5	105	3,5	0,03	0,9	0,1	0,32	10	145
100.5	15	0,5	0,0039	0,13	0,1	0,32	10	145
085.5	165	5,5	0,05	1,5	0,2	0,51	8	116
057.5	225	7,5	0,06	2	0,2	0,69	5	72,5
0213	390	13	0,1	3,4	0,4	1,2	2	29

QUANTITY	PACKAGE CONTENT
n. 1	Assembly kit
n. 1	5 X 20 delayed fuse
n. 1	Level probe with axial foot filter (PVDF) - level probe not in KCO PLUS mod.
n. 1	0,3 Bar injection valve (PVDF)
m 2	Delivery hose
m 2	Suction hose
m 2	Discharge hose
m 2,5	Input signal cable (only K PLUS)
n.1	Operating manual

POWER SUPPLY	FUSE
230 VAC (190-265 VAC) - 50/60 Hz	1 A
115 VAC (90-135 VAC) - 50/60 Hz	500 mA
24 VAC (20-32 VAC) - 50/60 Hz	2A
12 VDC (10-16 VDC)	3.15A

Via Donatori di Sangue, 1 - 02100 Rieti (Italy)
+39 074622841 | emecpumps.com

Specifications subject to change without notice | R2025

emec SIMPLE AS WATER

IQNET CERTIFIED MANAGEMENT SYSTEM
qualityaustria SYSTEM CERTIFIED
ISO 9001:2015 No.07728/0
ISO 14001:2015 No.00997/0
ISO 45001:2018 No.01121/0

Dimension

mm [inches]

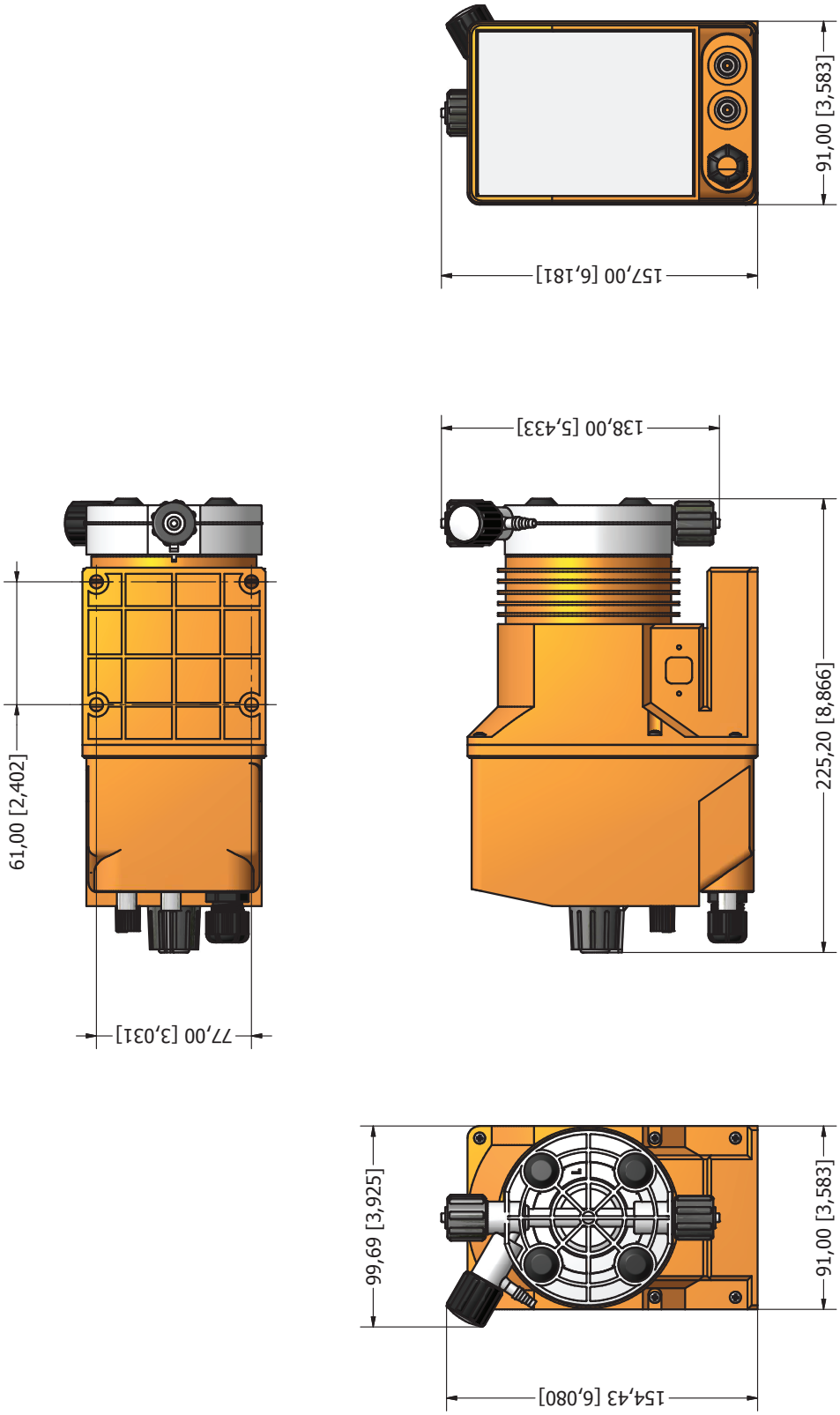

Via Donatori di Sangue, 1 - 02100 Rieti (Italy)
+39 074622841 | emecpumps.com

Specifications subject to change without notice | R2025

emec SIMPLE AS WATER

IQNET CERTIFIED MANAGEMENT SYSTEM

qualityaustria SYSTEM CERTIFIED

ISO 9001:2015 No.07728/0
ISO 14001:2015 No.00997/0
ISO 45001:2018 No.01121/0