"TMS" series Metering Pumps

Data Sheet

"TMSA Self Venting"

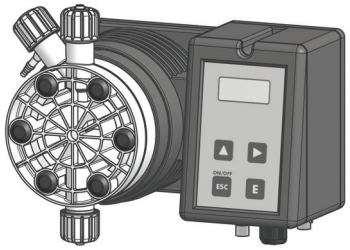

- Wall mounted, with dispaly
- Microprocessor technology
- Manual venting (TMS) or sefl venting (TMSA) PVDF pump head
- All liquid ends (pump head, injection valve, foot filter, delivery hose) are in PVDF

Power supply:	230 VAC (190-265 VAC) - 50/60 Hz 115 VAC (90-135 VAC) - 50/60 Hz 24 VAC (20-32 VAC) - 50/60 Hz 24 VDC (20-32 VDC) 12 VDC (10-16 VDC)
Pump Strokes	0-120
Environment Temperature:	0-45°C (32-113°F)
Chemical Temperature:	0-50°C (32-122°F)
Packaging and Transporting Temperature:	-10-50°C
Installation Class:	II
Pollution Level:	2
Audible Noise:	62,0 db(A)
Protection Degree Rating:	IP 65 (% working RU: 85% T<=40°C; 70% T=50°C -
without	condensing water)
Max altitude:	2000 m

Configuration code

MODELS			
TMS Code	**TMSA Code**	**MOD.**	**DESCRIPTION**
MF	**FF**	MF	Digital multifunction pump (Constant, Divide, Multiply, PPM, Batch, Volt, mA, %, ml/q) , stand-by and flow sensor input, alarm output and level control. Recovery fault mode, work-pause mode and upkeep mode.
DC	**AD**	DC	Digital constant pump, stand-by input and alarm output and level control.
PH	**AH**	PH	Proportional pump driven by internal built-in pH meter (0-14 pH) and level control, supplied without pH probe.
RH	**AR**	RH	Proportional pump driven by internal built-in ORP meter (0-1000 mV) and level control, supplied without ORP probe.

CAPACITIES					
TMS Models			Delivey hose (PVDF)	Suction hose	Pump head mod.
2005	5 l/h at 20 bar	1.32 GPH at 290 PSI	4 x 6	4 x 6	L
1207	7 l/h at 12 bar	3.96 GPH at 73 PSI	6 x 8	6 x 8	N
0515	15 l/h at 5 bar	3.96 GPH at 73 PSI	6 x 8	6 x 8	N
0420	20 l/h at 4 bar	5.28 GPH at 58 PSI	6 x 8	6 x 8	N
0330	30 l/h at 3 bar	1.32 GPH at 43 PSI	8 x 10	8 x 12	S
0150	50 l/h at 1 bar	1.32 GPH at 15 PSI	8 x 10	8 x 12	S
00100	100 l/h at 0 bar	26.4 GPH at 0 PSI	12 x 18 PVC reinforced	12 x 18 PVC reinforced	T
TMSA Models			Delivey hose (PVDF)	Suction hose	Pump head mod.
203,2	3,2 l/h at 20 bar	0.85 GPH at 290 PSI	4 x 6	4 x 6	LA
0510	10 l/h at 5 bar	2.64 GPH at 73 PSI	6 x 8	6 x 8	NA
0413	13 l/h at 4 bar	3.43 GPH at 58 PSI	6 x 8	6 x 8	NA
0320	20 l/h at 3 bar	5,28 GPH at 43,5 PSI	8 x 10	8 x 12	SA
0135	35 l/h at 1 bar	9,24 GPH at 14,5 PSI	8 x 10	8 x 12	SA

Model T MF 2005 K 00 00

POWER SUPPLY	
00	230 VAC Schuko plug
05	230 VAC australian plug
01	230 VAC without plug
03	115 VAC US plug
04	24 VAC without plug
05	12 VDC *
07	24 VDC
* On some models only.	

LIQUID ENDS								
	HEAD	**ORINGS**	**VALVE**		**DIAPHRAGM**	**HOSES [1]**		**VISCOSITY**
			Body	Balls		Delivery	Suction	Max CPS
K	PVDF	FKM B	PVDF	Ceramic	PTFE	PVDF	PVC	100
P	PVDF	EPDM	PVDF	Ceramic	PTFE	PVDF	PVC	100
Y	PVDF	Nytrile	PVDF	Ceramic	PTFE	PVDF	PVC	100
V	PP	FKM B	PP	Ceramic	PTFE	PVDF	PVC	100
D	PP	EPDM	PP	Ceramic	PTFE	PE	PVC	100
W	PP	Nytrile	PP	Ceramic	PTFE	PE	PVC	100
J	PVDF	FKM B + PTFE	PVDF	Ceramic	PTFE	PVDF	PVC	100
A	Acrylic	FKM B	PVDF	Ceramic	PTFE	PVDF	PVC	100
Z	SS	FKM B	SS	SS	PTFE	N/A	N/A	100
$	Acrylic	FKM B	PP	SS + Hastelloy spring	PTFE	PE	PVC	8000 [2]

[1] Size may be different from standard.
[2] Using high viscosity pump head mod. $, pump output may results lower in some applications.

Via Donatori di Sangue, 1 - 02100 Rieti (Italy)
+39 074622841 | emecpumps.com

emec SIMPLE AS WATER

IQNET CERTIFIED MANAGEMENT SYSTEM
qualityaustria SYSTEM CERTIFIED
ISO 9001:2015 No.07728/0
ISO 14001:2015 No.00997/0
ISO 45001:2018 No.01121/0

"TMS" series Metering Pumps

Data Sheet

"TMSA Self Venting"

INFORMATION						
TMS	**Strokes speed**		**Power consumption at max flow (230 VAC)**	**Power consumption at max flow (115 VAC)**	**Power consumption at max flow (24 VAC/VDC)**	**Weight**
	min	max				
	imp/hour	imp/min				
2005	1	120	27 Watt	21 Watt	n/a	5,7 Kg (12,6 Lbs)
0515	1	120	27 Watt	15 Watt	14 Watt	
0420	1	120	27 Watt	21 Watt	n/a	
0330	1	120	27 Watt	21 Watt	n/a	
0150	1	120	27 Watt	21 Watt	n/a	
00100	1	120	27 Watt	21 Watt	n/a	
TMSA	**Strokes speed**		**Power consumption at max flow (230 VAC)**	**Power consumption at max flow (115 VAC)**	**Power consumption at max flow (24 VAC/VDC)**	**Weight**
	min	max				
	imp/hour	imp/min				
203,2	1	120	27 Watt	21 Watt	n/a	5,7 Kg (12,6 Lbs)
0510	1	120	27 Watt	15 Watt	14 Watt	
0413	1	120	27 Watt	21 Watt	n/a	
0320	1	120	27 Watt	21 Watt	n/a	
0135	1	120	27 Watt	21 Watt	n/a	

MORE INFORMATION						
TMS	**Flow**			**cc per Stroke**	**Max injection pressure**	
	min cc/h	max l/h	Max GPH	**Max**	**bar**	**PSI**
2005	0,7	5	1.32	0,7	20	290
0515	2,1	15	3.96	2,1	5	73
0420	2,8	20	5.28	2,8	4	58
0330	4,2	30	7.93	4,2	3	43
0150	7	50	13.2	7	1	15
00100	14	100	26.4	14	0	0
TMSA	**Flow**			**cc per Stroke**	**Max injection pressure**	
	min cc/h	max l/h	Max GPH	**Max**	**bar**	**PSI**
203,2	0,44	3,2	0.85	0,44	20	290
0510	1,39	10	2.64	1,39	5	73
0413	1,80	13	3.43	1,80	4	58
0320	1,85	20	5,28	1,85	3	43,5
0135	3,24	35	9,24	3,24	1	14,5

"S"-"T" PUMP HEAD

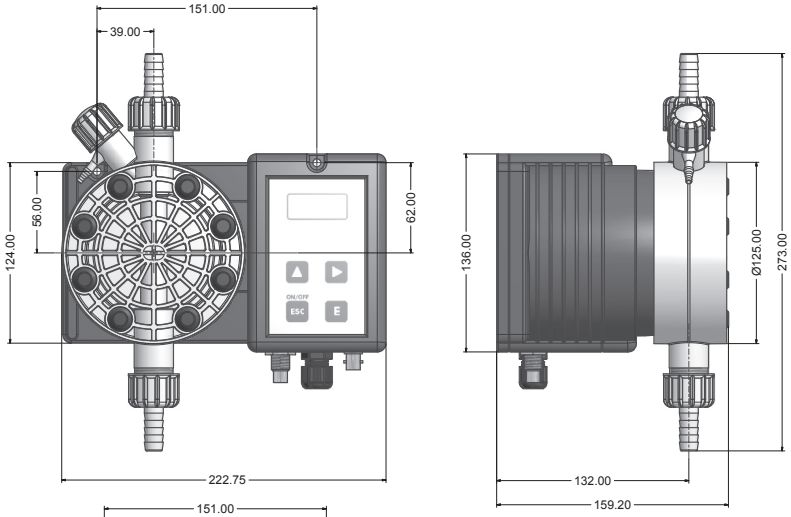

Measurement unit: mm

"N"-"P" PUMP HEAD

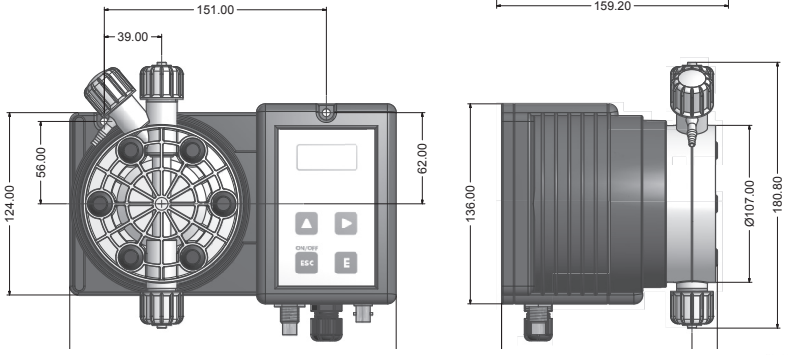

Via Donatori di Sangue, 1 - 02100 Rieti (Italy)
+39 074622841 | emecpumps.com

emec SIMPLE AS WATER

IQNET CERTIFIED MANAGEMENT SYSTEM

qualityaustria SYSTEM CERTIFIED
ISO 9001:2015 No.07728/0
ISO 14001:2015 No.00997/0
ISO 45001:2018 No.01121/0

Specifications subject to change without notice | R2025