"V" series Metering Pumps

Data Sheet

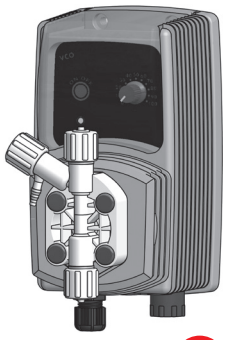

CE

c UL us LISTED (on request)

- Wall mounted
- Microprocessor technology
- Stroke speed adjustment
- Manual venting PVDF pump head
- All liquid ends (pump head, injection valve, foot filter) ....PVDF
- Enclosure .....PPO
- Environment temperature.....0-45°C(32-113°F)
- Chemical temperature.....0-50°C (32-122°F)
- Transportation and storage temperature .....-10-50°C (14-122°F)
- Installation class II
- Pollution level 2
- Audible noise.....70.4db(A)
- .....67.4db(A) silenced mod.
  .....66.4db(A) ultra-silenced mod.
- Protection degree .....IP65 (% working RU: 85% T<=40°C; 70% T=50°C - without condensing water)

Configuration Code

MODEL		
CODE	MODEL	FUNCTION
CO	"VCO"	Constant pump with stroke speed (frequency) adjustment and a divider mode to reduce by 10 times the pump capacity.
CL	"VCL"	Constant pump with level control, stroke speed (frequency) adjustment and a divider mode to reduce by 10 times the pump capacity.

CAPACITIES				
V Models			Hoses	Pump head
2001	1 l/h at 20 bar	0.26 GPH at 290 PSI	4 x 8	J
1802	2 l/h at 18 bar	0.52 GPH at 261 PSI	4 x 8	K
1804	4 l/h at 18 bar	1.05 GPH at 261 PSI	4 x 8	K
1502	2 l/h at 15 bar	0.52 GPH at 217 PSI	4 x 6	K
1504	4 l/h at 15 bar	1.05 GPH at 217 PSI	4 x 6	K
1505	5 l/h at 15 bar	1.32 GPH at 217 PSI	4 x 6	K
1004	4 l/h at 10 bar	1.05 GPH at 145 PSI	4 x 6	K
1005	5 l/h at 10 bar	1.32 GPH at 145 PSI	4 x 6	K
1010	10 l/h at 10 bar	2.64 GPH at 145 PSI	4 x 6	K
0706	6 l/h at 7 bar	1.58 GPH at 101 PSI	4 x 6	K
0510	10 l/h at 5 bar	2.64 GPH at 72 PSI	4 x 6	K
0512	12 l/h at 5 bar	3.17 GPH at 72 PSI	4 x 6	K
0501	1 l/h at 5 bar	0.26 GPH at 72 PSI	4 x 6	J
0408	8 l/h at 4 bar	2.11 GPH at 58 PSI	4 x 6	K
0310	10l/h at 3 bar	2.64 GPH at 43 PSI	4 x 6	K
0215	15l/h at 2 bar	3.96 GPH at 29 PSI	6 x 8	K
0116	16l/h at 1 bar	4.22 GPH at 14 PSI	6 x 8	K

Model V CO 2001 4 00 00

POWER SUPPLY	
00	230 VAC Schuko plug
0S	230 VAC australian plug
01	230 VAC without plug
03	115 VAC US plug
04	24 VAC without plug
05	12 VDC *
07	24 VDC

* On some models only.

LIQUID ENDS								
	HEAD	ORINGS	VALVES		DIAPHRAGM	HOSES		VISCOSITY
			Body	Balls		Delivery	Suction	Max CPS
1	PVDF	FKM B	PVDF	Ceramic	PTFE	PE	PVC	100
2	PVDF	EPDM	PVDF	Ceramic	PTFE	PE	PVC	100
4*	PVDF	FKM B	PVDF	Ceramic	PTFE	PE	PVC	100
5*	PVDF	EPDM	PVDF	Ceramic	PTFE	PE	PVC	100
V	PP	FKM B	PP	Ceramic	PTFE	PVDF	PVC	100
D	PP	EPDM	PP	Ceramic	PTFE	PVDF	PVC	100
W	PP	Nytrile	PP	Ceramic	PTFE	PVDF	PVC	100

* Use for capacities up to 1 l/h.

Via Donatori di Sangue, 1 - 02100 Rieti (Italy)
+39 074622841 | emecpumps.com

emec SIMPLE AS WATER

IQNET CERTIFIED MANAGEMENT SYSTEM

qualityaustria SYSTEM CERTIFIED
ISO 9001:2015 No.07728/0
ISO 14001:2015 No.00997/0
ISO 45001:2018 No.01121/0

Specifications subject to change without notice | R2025

Technical features

INFORMATION					
MODEL	Strokes speed		Power consumption at max flow (230 VAC)	Power consumption at max flow (115 VAC)	Weight
	min	max			
2001	18	180	16	13	2,2 KG (4.85 LBS)
1802	18	180	16	13	
1804	18	180	22	15	
1502	18	180	16	11	
1504	18	180	16	13	
1505	18	180	22	15	
1004	18	180	16	11	
1005	18	180	16	13	
1010	18	180	22	15	
0706	18	180	16	11	
0510	18	180	16	13	
0512	18	180	22	15	
0501	18	180	16	11	
0408	18	180	16	11	
0310	18	180	16	11	
0215	18	180	16	13	
0116	18	180	16	13	

CAPACITY						
MODEL	FLOW			cc per STROKE	Maximum pressure	
	min cc/h	max l/h	Max GPH		bar	PSI
2001	97,2	1	0,26	0,09	20	290
1802	205,2	2	0,53	0,19	18	261
1804	399,6	4	1,1	0,37	18	261
1502	205,2	2	0,5	0,19	15	217
1504	399,6	4	1,1	0,37	15	217
1505	496,8	5	1,3	0,46	15	217
1004	399,6	4	1,1	0,37	10	145
1005	496,8	5	1,3	0,46	10	145
1010	1004,4	10	2,6	0,93	10	145
0706	604,8	6	1,6	0,56	7	101
0510	1004,4	10	2,6	0,93	5	72
0512	1198,8	12	3,2	1,11	5	72
0501	97,2	1	0,3	0,09	5	72
0408	799,2	8	2,1	0,74	4	58
0310	1004,4	10	2,64	0,93	3	43
0215	1501,2	15	3,96	1,39	2	29
0116	1598,4	16	4,2	1,48	1	14

FUSE		
MODEL	230 VAC	115 VAC
2001	1	500
1802	1	500
1804	1.25	630
1502	800	400
1504	1	500
1505	1.25	630
1004	800	400
1005	1	500
1010	1.25	630
0706	800	400
0510	1	500
0512	1.25	630
0501	800	400
0408	800	400
0310	800	400
0215	1.25	630
0116	1	500

QUANTITY	PACKAGE CONTENT
n. 1	Assembly kit
n. 1	5 X 20 delayed fuse
n. 1	Level probe with axial foot filter (PVDF) (level probe not in CO model)
n. 1	0,3 Bar injection valve (PVDF)
m 2	Delivery hose
m 2	Suction hose
m 2	Discharge hose
n.1	Operating manual

POWER SUPPLY
230 VAC (190÷265 VAC)
115 VAC (90÷135 VAC)
24 VAC (20÷32 VAC)
12 VDC (10÷16 VDC)

Via Donatori di Sangue, 1 - 02100 Rieti (Italy)
+39 074622841 | emecpumps.com

Specifications subject to change without notice | R2025

emec
SIMPLE AS WATER

IQNET CERTIFIED MANAGEMENT SYSTEM
qualityaustria SYSTEM CERTIFIED
ISO 9001:2015 No.07728/0
ISO 14001:2015 No.00997/0
ISO 45001:2018 No.01121/0

Dimension

mm [inches]

DIMENSIONS		
	mm	*inches*
A	106.96	4.21
B	210.44	8.28
C	199.44	7.85
D	114.50	4.50
E	187.96	7.40
F	97.00	3.81
G	106.96	4.21
H	125.47	4.93
L	50.00	1.96
M	201.00	7.91

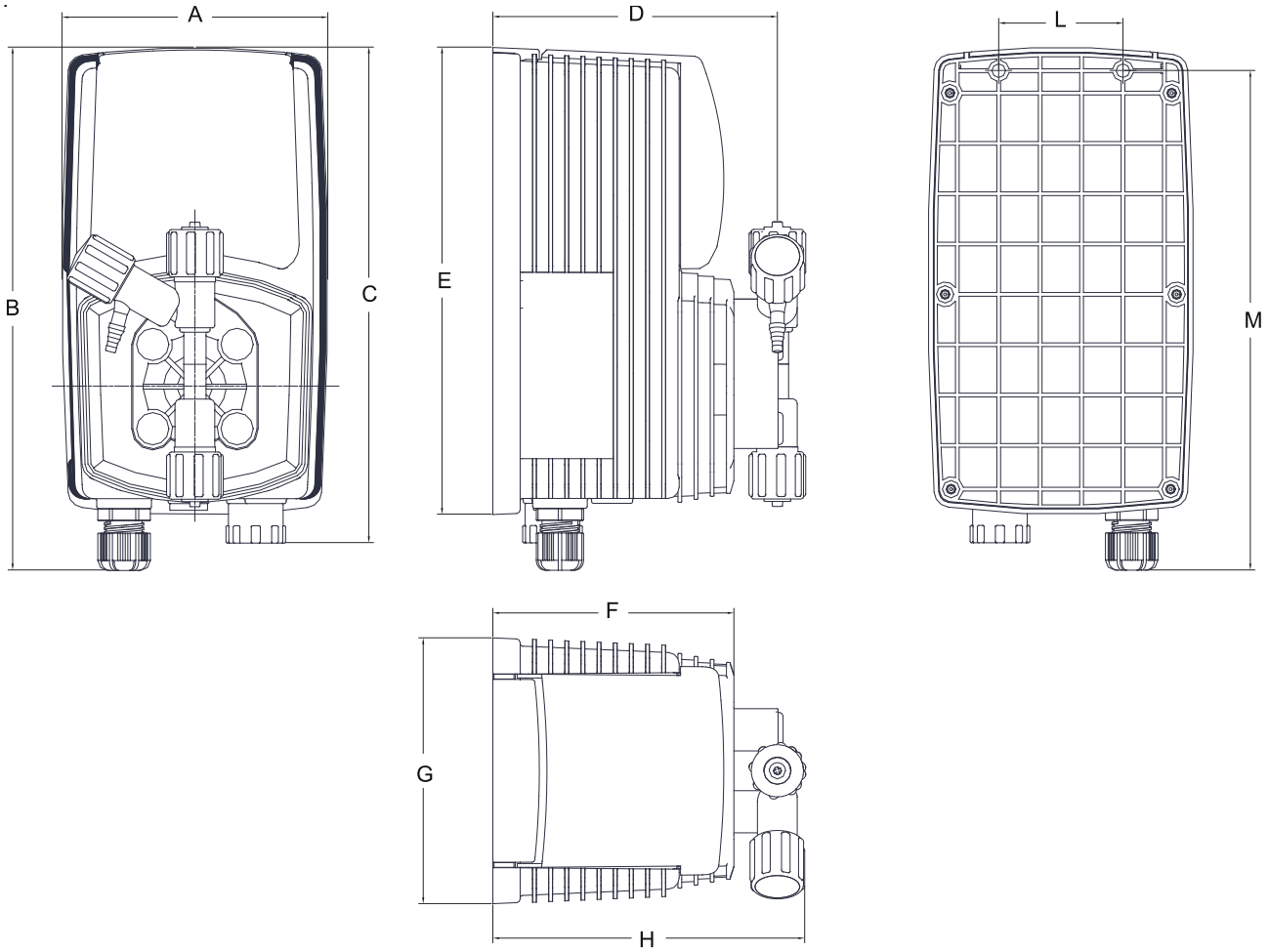

"VA" Self Venting series Metering Pumps Data Sheet

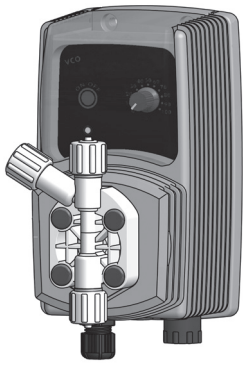

- Wall mounted
- Microprocessor technology
- Stroke speed adjustment
- Self venting PVDF pump head
- All liquid ends (pump head, injection valve, foot filter) ....PVDF
- Enclosure .....PPO
- Environment temperature.....0-45°C (32-113°F)
- Chemical temperature.....0-50°C (32-122°F)
- Transportation and storage temperature .....-10-50°C (14-122°F)
- Installation class II
- Audible noise.....70.4db(A)
  .....67.4db(A) silenced mod.
  .....66.4db(A) ultra-silenced mod.
- Protection degree .....IP65 (% working RU: 85% T<=40°C; 70% T=50°C - without condensing water)

CE

c UL us LISTED (on request)

Configuration Code

MODEL		
CODE	MODEL	FUNCTION
AO	"VA CO"	Constant pump with stroke speed (frequency) adjustment and a divider mode to reduce by 10 times the pump capacity.
AL	"VA CL"	Constant pump with level control, stroke speed (frequency) adjustment and a divider mode to reduce by 10 times the pump capacity.

CAPACITIES				
VA Models			Hoses	Pump head
1802	2 l/h at 18 bar	0.52 GPH at 261 PSI	4 x 8	KA
1503	3 l/h at 15 bar	0.79 GPH at 217 PSI	4 x 6	KA
1501	1 l/h at 15 bar	0.26 GPH at 217 PSI	4 x 6	KA
103,4	3,4 l/h at 10 bar	0.89 GPH at 145 PSI	4 x 6	KA
1007	7 l/h at 10 bar	1.84 GPH at 145 PSI	4 x 6	KA
1002	2 l/h at 10 bar	0.52 GPH at 145 PSI	4 x 6	KA
100,5	0,5 l/h at 10 bar	0.1 GPH at 145 PSI	4 x 6	JA
0704	4 l/h at 7 bar	1.05 GPH at 101 PSI	4 x 6	KA
057,5	7,5 l/h at 5 bar	1.98 GPH at 72 PSI	4 x 6	KA
0509	9 l/h at 5 bar	2,37 GPH at 72 PSI	4 x 6	KA
045,5	5,5 l/h at 4 bar	1.45 GPH at 58 PSI	4 x 6	KA
0307	7 l/h at 3 bar	1.84 GPH at 43 PSI	4 x 6	KA
0212	12 l/h at 2 bar	3.2 GPH at 29 PSI	6 x 8	KA
0113,5	13,5 l/h at 1 bar	3.56 GPH at 14 PSI	6 x 8	KA

Model V **AO** **1802** **4** 00 **00**

POWER SUPPLY	
00	230 VAC Schuko plug
0S	230 VAC australian plug
01	230 VAC without plug
03	115 VAC US plug
04	24 VAC without plug
05	12 VDC *
07	24 VDC
* On some models only.	

LIQUID ENDS								
	HEAD	ORINGS	VALVES		DIAPHRAGM	HOSES		VISCOSITY
			Body	Balls		Delivery	Suction	Max CPS
1	PVDF	FKM B	PVDF	Ceramic	PTFE	PE	PVC	100
3	PVDF	EPDM	PVDF	Ceramic	PTFE	PE	PVC	100
4*	PVDF	FKM B	PVDF	Ceramic	PTFE	PE	PVC	100
5*	PVDF	EPDM	PVDF	Ceramic	PTFE	PE	PVC	100
V	PP	FKM B	PP	Ceramic	PTFE	PVDF	PVC	100
D	PP	EPDM	PP	Ceramic	PTFE	PVDF	PVC	100
W	PP	Nytrile	PP	Ceramic	PTFE	PVDF	PVC	100
* Use for capacities up to 1 l/h.								

Via Donatori di Sangue, 1 - 02100 Rieti (Italy)
+39 074622841 | emecpumps.com

Specifications subject to change without notice | R2025

emec SIMPLE AS WATER

IQNET CERTIFIED MANAGEMENT SYSTEM

qualityaustria SYSTEM CERTIFIED
ISO 9001:2015 No.07728/0
ISO 14001:2015 No.00997/0
ISO 45001:2018 No.01121/0

"VA" Self Venting series Metering Pumps Data Sheet

Technical features

INFORMATION					
Models	Strokes speed		Power consumption at max flow (230 VAC)	Power consumption at max flow (115 VAC)	Weight
	min	max			
1802	18	180	22 Watt	15 Watt	2,2 KG (4.85 LBS)
1503	18	180	22 Watt	15 Watt	
1501	18	180	16 Watt	11 Watt	
103,4	18	180	16 Watt	13 Watt	
1007	18	180	22 Watt	15 Watt	
1002	18	180	16 Watt	11 Watt	
100,5	18	180	16 Watt	11 Watt	
0704	18	180	16 Watt	11 Watt	
057,5	18	180	16 Watt	13 Watt	
0509	18	180	22 Watt	15 Watt	
045,5	18	180	16 Watt	11 Watt	
0307	18	180	16 Watt	11 Watt	
0212	18	180	16 Watt	13 Watt	
0113,5	18	180	16 Watt	13 Watt	

CAPACITY						
Model	FLOW			cc per STROKE	Maximum pressure	
	min cc/h	max l/h	Max GPH		bar	PSI
1802	205.2	2	0.53	0.19	18	261
1503	302.4	3	0.79	0.28	18	217
1501	97.2	1	0.3	0.09	15	217
103,4	334.8	3.4	0.9	0.31	10	145
1007	702	7	1.8	0.65	10	145
1002	205.2	2	0.5	0.19	10	145
100,5	54	0.5	0.1	0.05	10	145
0704	399.6	4	1.1	0.37	7	101
057,5	745.2	7.5	2	0.69	5	72
0509	896.4	9	2.4	0.83	5	72
045,5	550.8	5.5	1.5	0.51	4	58
0307	702	7	1.8	0.65	3	43
0212	1198.8	12	3.2	1.11	2	29
0113,5	1350	13.5	3.6	1.25	1	14

QUANTITY	PACKAGE CONTENT
n. 1	Assembly kit
n. 1	5 X 20 delayed fuse
n. 1	Level probe with axial foot filter (PVDF) (level probe not in CO model)
n. 1	0,3 Bar injection valve (PVDF)
m 2	Delivery hose
m 2	Suction hose
m 2	Discharge hose
n.1	Operating manual

POWER SUPPLY
230 VAC (190-265 VAC)
115 VAC (90-135 VAC)
24 VAC (20-32 VAC)
12 VDC (10-16 VDC)

FUSE		
MODEL	230 VAC	115 VAC
1802	1.25 A	1.25 A
1503	1.25 A	1.25 A
1501	800 mA	800 mA
103,4	1 A	1 A
1007	1.25 A	1.25 A
1002	800 mA	800 mA
100,5	800 mA	800 mA
0704	800 mA	800 mA
057,5	1 A	1 A
0509	1.25 A	1.25 A
045,5	800 mA	800 mA
0307	800 mA	800 mA
0212	1.25 A	1.25 A
0113,5	1 A	1 A

Via Donatori di Sangue, 1 - 02100 Rieti (Italy)
+39 074622841 | emecpumps.com

Specifications subject to change without notice | R2025

emec SIMPLE AS WATER

IQNET CERTIFIED MANAGEMENT SYSTEM
qualityaustria SYSTEM CERTIFIED
ISO 9001:2015 No.07728/0
ISO 14001:2015 No.00997/0
ISO 45001:2018 No.01121/0

Dimension

mm [inches]

DIMENSIONS		
	mm	*inches*
A	106.96	4.21
B	210.44	8.28
C	199.44	7.85
D	114.50	4.50
E	187.96	7.40
F	97.00	3.81
G	106.96	4.21
H	125.47	4.93
L	50.00	1.96
M	201.00	7.91

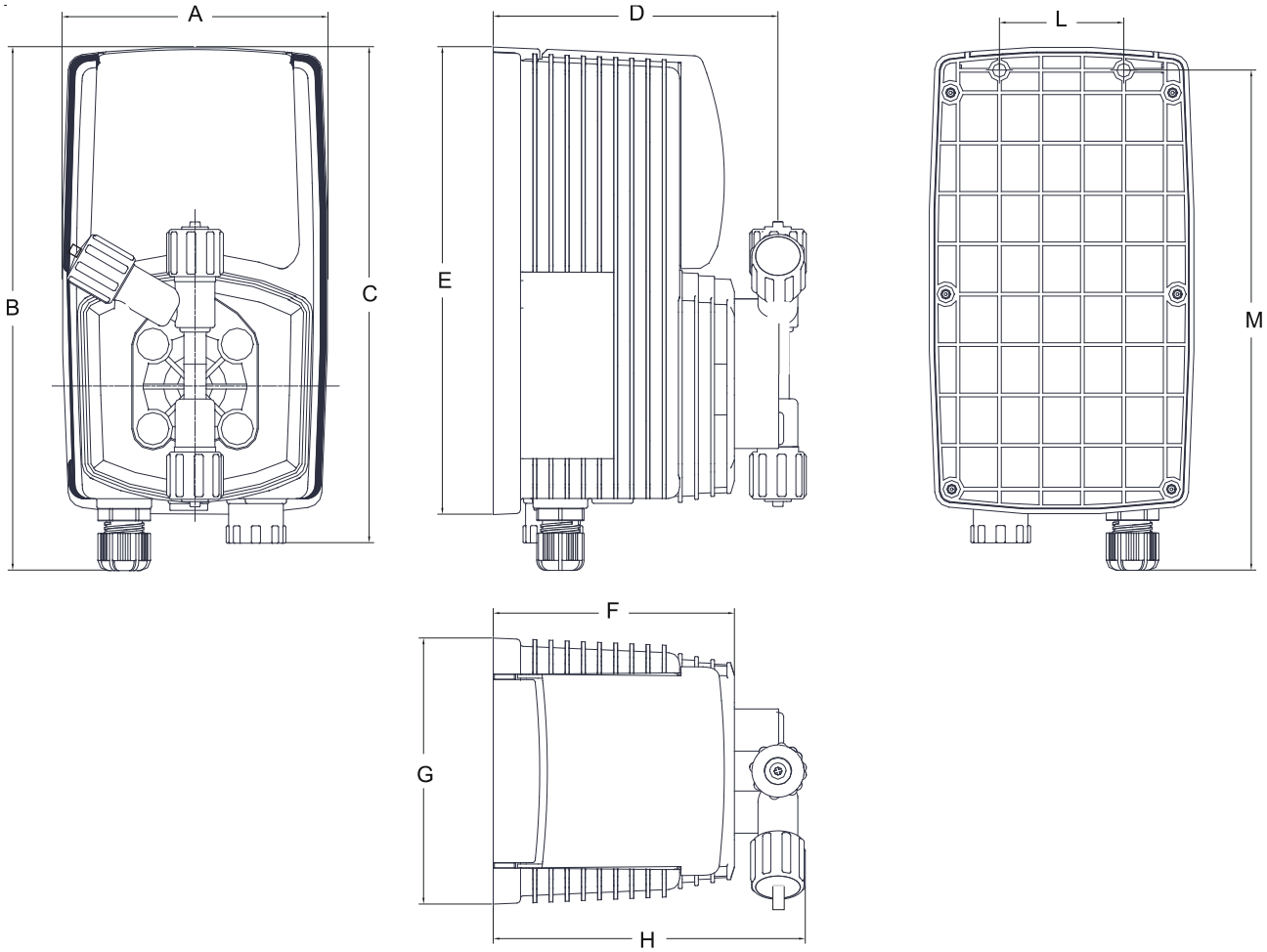

Via Donatori di Sangue, 1 - 02100 Rieti (Italy)
+39 074622841 | emecpumps.com

Specifications subject to change without notice | R2025

emec SIMPLE AS WATER

IQNET CERTIFIED MANAGEMENT SYSTEM
qualityaustria SYSTEM CERTIFIED
ISO 9001:2015 No.07728/0
ISO 14001:2015 No.00997/0
ISO 45001:2018 No.01121/0