"WDPHRHS"

Data Sheet

FEATURES

- Wide LCD backlight display
- Instrument operated by a rotation "Encoder"
- 1 metering pumps with PVDF pump heads
- A 230 Vac output driven by Redox
- Flow control input
- pH range: 0-14 pH; Redox range: 0-999 mV
- Alarms: max dosing time, probe check-up, level, voltage, flow
- N.O. or N.C. digital input
- Programmable delay at dosing startup (max 60 minutes)
- pH priority dosage over ORP dosage
- Probe check-up
- pH compensation
- Environment working temp.: -10°C - 45°C (14°F - 113°F)
- Power supply 190÷265 VAC; 50/60 Hz
- RS485 output for web control (ERMES)

INPUT:

- Stand-by
- Flow
- pH level
- Redox level
- pH probe
- Redox probe
- Power supply

OUTPUT:

- pH pump
- 230 Vac output
- Alarm output

WDPHRHS is an integrated All-in-One Swimming Pool Controller with a metering pump for acid (pH) and a 230 Vac output driven by disinfectant (ORP) for salt generator or dry feeder.

It is possible to operate in two different working modes: On/Off or proportional according with the set points.
In On/Off working mode, a "Waiting Time" function let the pumps operate at pulses per minutes for a set time (1 pulse every x minutes) to provide a reaction time.

Important operational messages easily recognizable by the different background colors of the display

CONFIGURATION CODE

MODELS
0310
SELF-VENTING MODELS
0307

POWER SUPPLY	
00	230 VAC Schuko plug
01	230 VAC without plug
03	115 VAC US plug

Model WBS 0310 1 00 00 000

LIQUID ENDS								
	Head	Orings	Valves		Diaphragm	Hoses		Viscosity
			Body	Balls		Delivery	Suction	Max CPS
1	PVDF	Viton®	PVDF	Ceramic	PTFE	PE	PVC	100
2	PVDF	EPDM	PVDF	Ceramic	PTFE	PE	PVC	100
Viton® is a registered trademark of DuPont Dow Elastomers.								

Via Donatori di Sangue, 1 - 02100 Rieti (Italy)
+39 074622841 | emecpumps.com

Specifications subject to change without notice | R2025

emec SIMPLE AS WATER

IQNET CERTIFIED MANAGEMENT SYSTEM
qualityaustria SYSTEM CERTIFIED
ISO 9001:2015 No.07728/0
ISO 14001:2015 No.00997/0
ISO 45001:2018 No.01121/0

"WDPHRHS"

Data Sheet

INFORMATION				
MODEL	Stroke speed		Power consumption	Weight
	Min stroke hour	Max stroke minute		
0310	1	180	32 Watt	3.0 Kg (6.61 Lbs)
SELF-VENTING MODEL				
0310	1	180	32 Watt	3.0 Kg (6.61 Lbs)

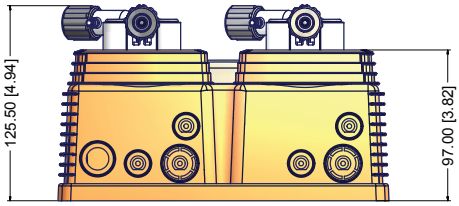

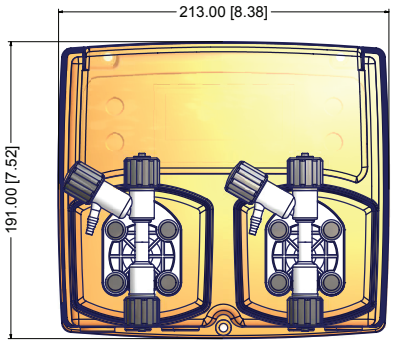

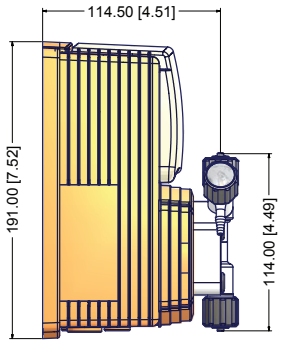

MORE INFORMATION						
MODEL	Flow		Stroke/ minute	cc per stroke	Max pressure	
	l/h	GPH			bar	PSI
0310	10	2,64	180	0,93	03	44
SELF-VENTING MODEL						
0307	07	1,85	180	0,65	03	44

Via Donatori di Sangue, 1 - 02100 Rieti (Italy)
+39 074622841 | emecpumps.com

Specifications subject to change without notice | R2025

emec SIMPLE AS WATER

IQNET CERTIFIED MANAGEMENT SYSTEM
qualityaustria SYSTEM CERTIFIED
ISO 9001:2015 No.07728/0
ISO 14001:2015 No.00997/0
ISO 45001:2018 No.01121/0