R990126

KMS DC - KMSA DC

PRODUCT LABEL

EN

KMS DC

KMSA DC

SOLENOID DRIVEN METERING PUMPS
WITH DIAPHRAGM

OPERATING MANUAL

This operating instructions contains safety information that if ignored can endanger life or result in serious injury.

Read these instructions **carefully** before use and keep them for future reference.

Information and specifications on this manual could be uncorrect or could have printing errors. Specifications are subject to change without notice.

Version: R1-04-15

Product Identification Codes
(the "_" symbols complete the product code based on the configuration of the variants)
Codici Identificativi Prodotto
(i simboli "_" completano il codice del prodotto in base alla configurazione delle varianti)

KPO _____	KIP _____	KAN _____
KPA _____	KLA _____	KAF _____
KPL _____	KLC _____	KAD _____
KUA _____	KLU _____	KCD _____
KSP _____	KMF _____	KCF _____
KSU _____	KMX _____	KMH _____
KMU _____	KPI _____	KML _____
KAU _____	KEN _____	KMM _____
KAM _____	KFS _____	KPH _____
KCC _____	KDC _____	KRH _____
KCS _____	KAR _____	

GENERAL SAFETY GUIDELINES

Operating, installing, or maintaining the unit in any way that is not covered in this manual could cause death, serious personal injury, or damage to the equipment.

ICON

This manual use the following safety message icon:

Danger!
Indicates a hazardous situation which, if not avoided, will result in death or serious injury.

Warning!
Indicates a hazardous situation which, if not avoided, could result in death or serious injury.

Important - A practice not related to personal injury or additional information.

Cross reference - An instance which refers to related information elsewhere in the same document

PURPOSE OF USE AND SAFETY

METERING PUMP IS INTENDED FOR CHEMICAL DOSING AND DRINKING WATER TREATMENT.

Do not use in explosive area (EX).
Do not use with flammable chemicals.
Do not use with radioactive chemicals.

Use after a proper installation.

Use the pump in accordance with the data and specifications printed on the label.

Do not modify or use in a manner inconsistent with the provisions of the operating manual.

Keep the pump protected from sun and water. Avoid water splashes.

In emergencies the pump should be switched off immediately. Disconnect the power cable from the power supply.

When using pump with aggressive chemicals observe the regulations concerning the transport and storage of aggressive fluids.

When installing always observe national regulations.

Manufacturer is not liable for any unauthorized use or misuse of this product that may cause injury, damage to persons or materials.

Pump must be accessible at all times for both operating and servicing. Access must not be obstructed in any way.

Feeder should be interlocked with a no-flow protection device.

Pump and accessories must be serviced and repaired by qualified and authorized personnel only.

Before any operation:
- **always read chemical Material Safety Data Sheet (MSDS);**
- **always wear protective clothing;**
- **always discharge the liquid end before servicing the pump.**
- **empty and rinse the liquid end before work on a pump which has been used with hazardous or unknown chemicals.**

This equipment requires regular maintenance to ensure potability requirements of the water and maintenance of improvements as declared by the manufaturer.

ENVIRONMENTAL SAFETY

Work area
Always keep the pump area clean to avoid and/or discover emissions.

Recycling guidelines

EWC code: 16 02 14

Always recycle according to these guidelines:
1. If the unit or parts are accepted by an authorized recycling company, then follow local recycling laws and regulations.
2. If the unit or parts are not accepted by an authorized recycling company, then return them to the nearest representative.

Waste and emissions regulations
Observe these safety regulations regarding waste and emissions:
- Dispose appropriately of all waste.
- Handle and dispose of the dosed chemical in compliance with applicable environmental regulations.
- Clean up all spills in accordance with safety and environmental procedures.
- Report all environmental emissions to the appropriate authorities.

LABEL

Figura 1. Product label.

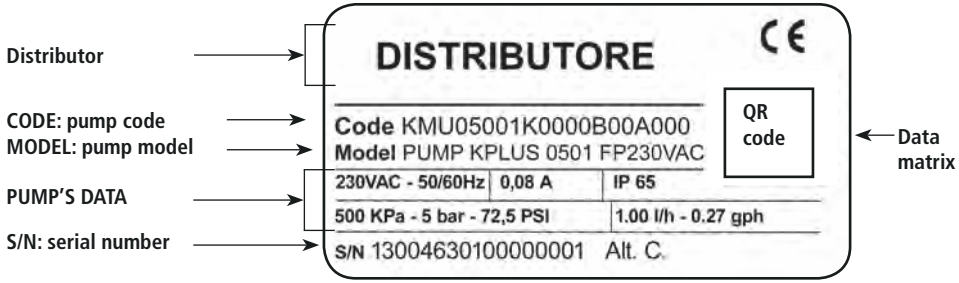

SPARE PARTS

For spare parts orders or any other communication, refer to the pump's label.
Code (CODE) and serial number (S / N) uniquely identify the pump.

TRANSPORTATION AND STORAGE

A not suitable transportation or storage can cause damages.

Use origianal box to pack the pump.

Observe storage conditions also for transportation.

Although packed, always protect the unit against humidity and the action of chemicals.

Before return the dosing pump to the manufacturer Repair service, drain the chemical from pump head and rinse it. Refer to **Shutdown procedure.**

Fill the PRODUCT SERVICE REPAIR FORM and send it with the dosing pump.
Repair service is not accepted if PRODUCT SERVICE REPAIR FORM is missing.

DO NOT TRASH PACKAGING. USE IT TO RETURN THE PUMP.

Transportation and storage temperature ..... 10 - 50°C (32 - 122°F)
Umidity ..... 95% relative humidity (not condensed)

1. INTRODUCTION

1.1 KMS DC Series

KMS D is designed for low/middle dosing of chemicals.
The pump works CONSTANT MODE.

KMS DC has got:
- STAND-BY input
- ALARM contact output.

Flow rate is determined by the stroke length and by the stroke speed. The stroke length is adjustable from 0 to 100% using the stroke length adjustment knob. However dosing accuracy is guarantee within an adjustment range from 30% to 100%.

All control and setup parameters are available through a digital keyboard and they are displayed on a LCD backlit display.

Note: some functions described into this manual may need accessories not included into the pump packaging.

1.2 KMSA DC Series

KMSA DC is the KMS DC version with **self-venting pump head**.
Self-venting pump head must be used when using chemicals that produce gas (i.e. hydrogen peroxide, ammonium, sodium hypoclorite at particular conditions).
For connections **"Self-Venting pump head installation".**

1.4 Working mode

Pump workS in CONSTANT MODE:

MODE	WORKING MODE
CONSTANT	Pump doses at a constant rate set in "SPH" (strokes for hour), "SPM" (strokes for minute) or "LPH" (litres per hour) parameters set during program session.

2. UNPACKING

Included into package:

n.4	Dibbles ø6
n.4	Self tapping screws 4,5 x 40
n.1	Delayed fuse 5 X 20
n.1	Foot filter with valve
n.1	Injection valve
n.1	Level probe
m 2	Delivery pipe * (PVDF)
m 2	Suction pipe * (transparent PVC)
m 2	Discharge pipe (transparent PVC)
m 2,5	Signal cable for "Stand-by" and "Alarm"
n.1	This installation manual

* If hose is 6x8 there is only a 4meters long hose. Cut to obtain suction and delivery hoses.

PLEASE DO NOT TRASH PACKAGING.
IT CAN BE USED TO RETURN THE PUMP.

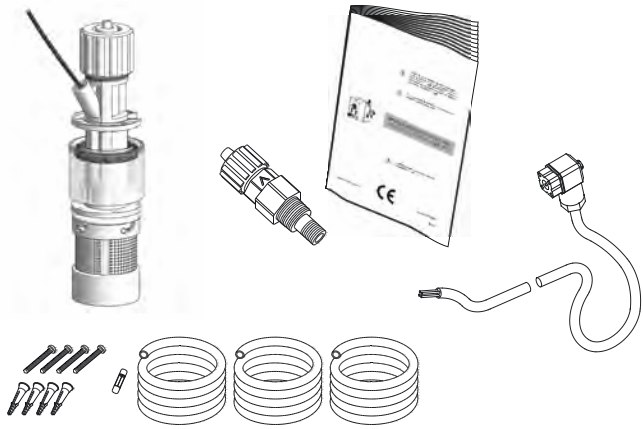

LEGEND:

a. Alternating Current; ~

b. DC, ⎓

c. Protective Earth; ⏚

d. Standby; ⏻

e. Warning - ⚠

KMS DC

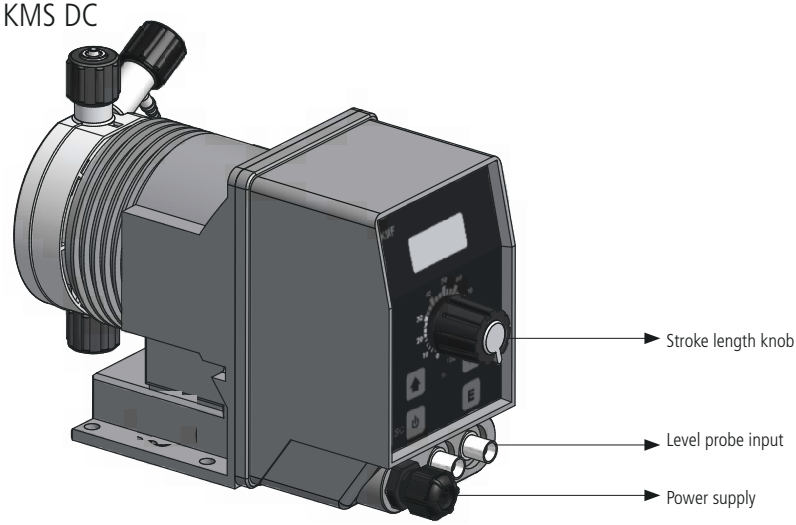

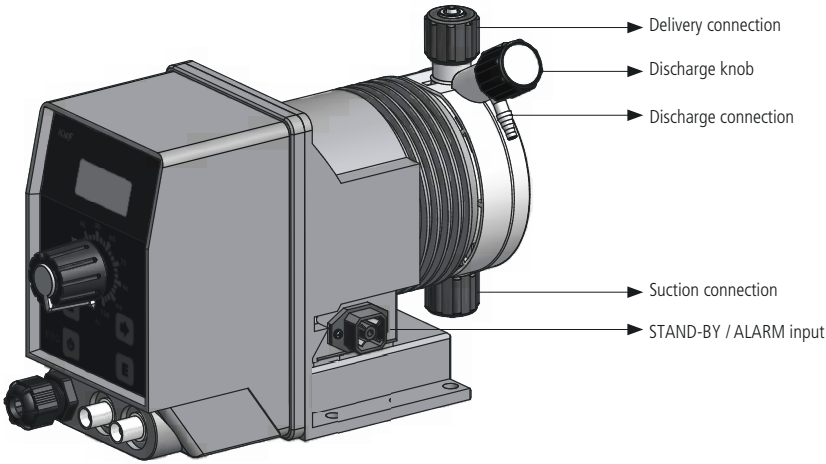

Manual stroke length adjustment

Max CC/stroke (**Construction Materials and Technical info**) are referred to Stroke length knob on 100%.
If Stroke length knob is on 50% cc/stroke will be halved.
To regulate pump's capacity: turn on the pump then press and rotate the knob.

Dosing accuracy is guarantee within an adjustment range from 30% to 100%.

Note: if knob isn't on 100% position then the pump will dose at a pressure greater than the one declared on label.

KMSA DC

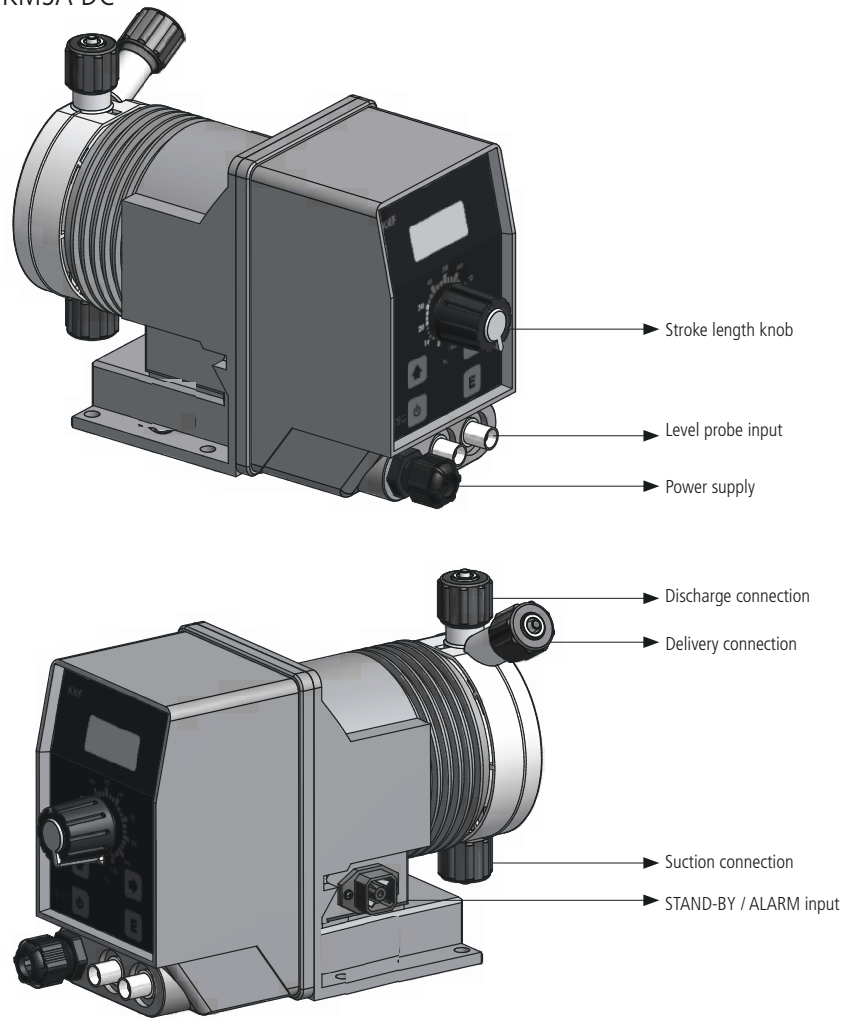
Stroke length knob
Level probe input
Power supply
Discharge connection
Delivery connection
Suction connection
STAND-BY / ALARM input

4. BEFORE TO INSTALL WARNINGS

Pump's installation and operativity is made in 4 main steps:

Pump's installation
Hydraulic Installation (hoses, level probe, injection valve)
Electrical Installation (main power connection, priming)
Programming the pump.

Before to start, please read carefully the following safety information.

Protective clothes

Wear always protective clothes as masks, gloves, safety glasses, ear plugs or ear muffs and further security devices during ALL installation procedure and while handling chemicals.

Installation location

Pump must be installed in a safety place and fixed to the table / wall to avoid vibration problems!

Pump must be installed in a easy accessible place!

Pump must be installed in horizontal position!

Avoid water splashes and direct sun!

Hoses and Valves

Suction and delivery hoses must be installed in vertical position!
All hoses connections must be performed using only hands' force!
No tongs required!

Delivery hose must be firmly fixed to avoid suddenly movements that could damage near objects!

Suction hose must be shorter as possible and installed in vertical position to avoid air bubbles suction!

Use only hoses compatibles with product to dose! See chemical compatibility table. If dosing product is not listed please consult full compatibility table or contact chemical's manufacturer!

Feeder should be interlocked with a no-flow protection device to automatically shut-off the pumps when there is no flow!

Adequate measures shall be taken to prevent cross connection of chemicals!

Chemical feeding must be stopped during backwash cycles and periods of noflow as these conditions may introduce the potential for chemical overdosing. Not doing so may result in elevated chemical concentrations and hazerdous gas introduction into the pool or spa.

5. INSTALLATION DRAW

Pump must be installed in a stable support (for example a table) at a maximum height (**from tank's bottom**) of **1,5 meters**.

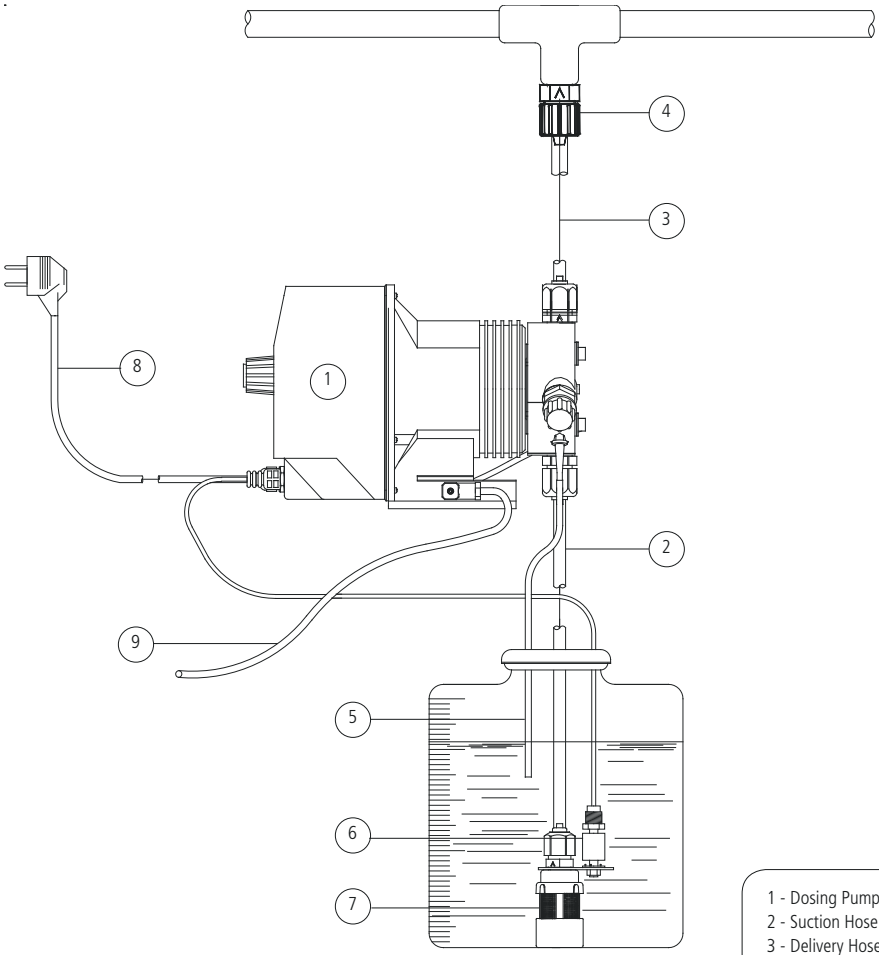

1 - Dosing Pump
2 - Suction Hose
3 - Delivery Hose
4 - Injection Valve
5 - Air discharge
6 - Level Probe
7 - Foot Filter
8 - Power Cable
9 - Standby / Alarm

6. HYDRAULIC INSTALLATION

Hydraulic connections are:

Suction Hose with level probe and foot filter
Delivery Hose with injection valve
Discharge Hose

Suction Hose.

Completely unscrew tightening nut from pump's head and remove assembling components: tightening nut, holding ring and pipe holder.

Assembly as shown in fig. (A). Insert hose into pipe holder until it reaches the bottom.

Lock hose on pump's head by screwing down the tightening nut.
Use only hands to do it!

Connect other side of the hose to the foot filter using the same procedure.

fig. (A)

Assembling foot filter with level probe.

Level probe must be assembled with foot filter using the provided kit.
Foot valve is made to be installed into tank's bottom without sediments priming problem.

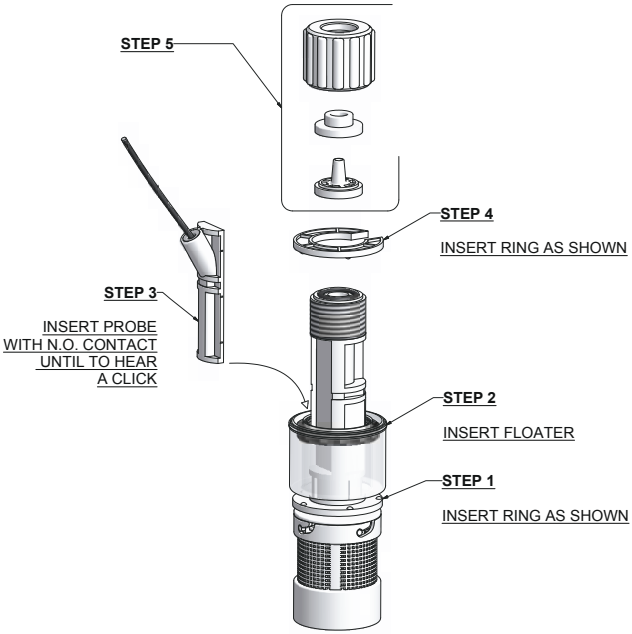

Connect BNC from level probe into pump's level input (front side of the pump).
Put level probe assembled with foot filter into tank's bottom.

Warning: If there is a mixer installed into tank, install a suction lance instead of level probe / foot filter.

Delivery Hose.

Completely unscrew tightening nut from pump's head and remove assembling components: tightening nut, holding ring and pipe holder.

Assembly as shown in fig. (A). Insert hose into pipe holder until it reaches the bottom.

Lock hose on pump's head by screwing down the tightening nut.
Use only hands to do it!

Connect other side of the hose to the injection valve using the same procedure.

Injection Valve.

Injection valve must be installed on plant from water's input.
Injection valve will open at pressure greater than 0,3bar.

Dicharge hose.

Insert one side of discharge hose into discharge connector as shown in fig (C).

Insert other side of discharge hose into product's tank.
During priming procedure product exceeding will flow into tank.

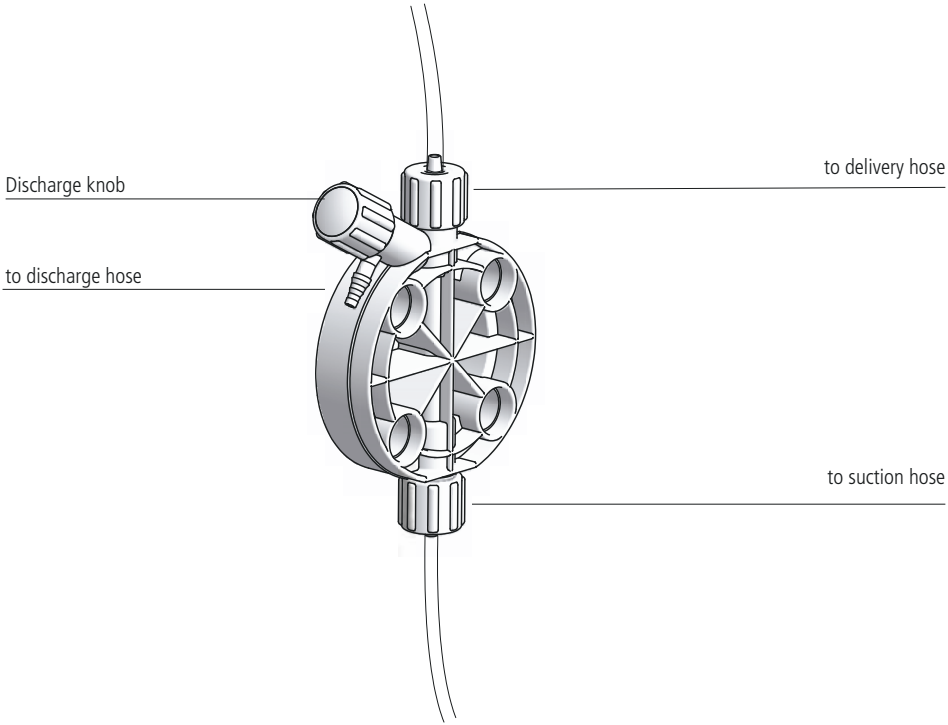

fig (C)

For priming procedure see the paragraph "Priming".

Self-venting pump head.

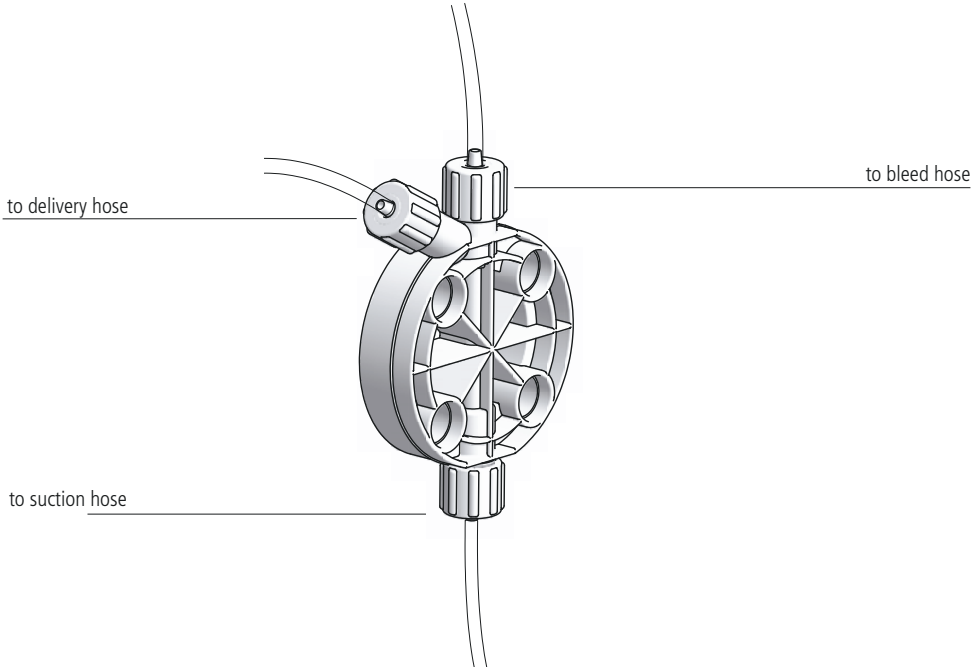

Self-venting pump head must be used when using chemicals that produce gas (i.e. hydrogen peroxide, ammonium, sodium hypoclorite at particular conditions).

Hoses assembling procedure (including purge hose) is described in fig. (A).

Notes:

- suction, delivery and purge valves are DIFFERENT! Do not exchange them!

- delivery and purge hoses are made of same material!

- it's allowed to lightly bend discharge hose!

- during calibration procedure ("TEST") insert discharge hose into BECKER test-tube!

7. ELECTRICAL INSTALLATION

All electrical connections must be performed by AUTHORIZED AND QUALIFIED personnel only.
Before to proceed, please, verify the following steps:

- verify that pump's label values are compatible with main power supply.

- pump must be connected to a plant with a differential switch (0,03A sensitivity) if there isn't a good ground.

- to avoid damages to the pump do not install it in parallel with heavy inductance load (for example: engines). A relay switch must be used. See below picture.

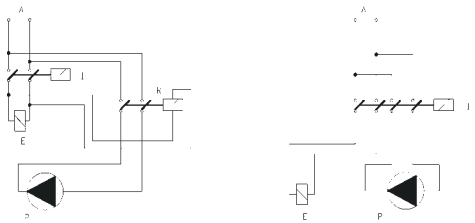

P - Dosing Pump
R - Relay
I - Switch or safety device
E - Electrovalve or inductance load
A - Main Power

WARNING
IF EQUIPMENT IS SUPPLIED WITH A PLUG:

If an appliance coupler or separable plug is used as the disconnecting device, it shall be readily identifiable and easily reached by the operator. For single-phase portable equipment, a plug on a cord of length not greater than 3m is considered to be easily reached.

WARNING
IF EQUIPMENT IS NOT SUPPLIED WITH A PLUG:

a) a switch or circuit-breaker shall be included in the building installation
b) it shall be in close proximity to the equipment and within easy reach of the operator
c) it shall be marked as the disconnetting device for the equipment

Once verified previous steps proceed as follows:

- check that "BNC" of level probe has been connected as described in "Hydraulic Installation" chapter.

- connect alarm and/or stand-by signal as described below fig (D):

1: (Green) "Stand-by" Input
4: (Yellow) "Stand-by" Ground

2: (Brown) Alarm (Relay) Common
3: (White) N.O. Alarm(Relay) Contact

Max load relay output: free contact 1A 24VAC

fig (D)

Notes:
- "Alarm" signal isn't fuse protected
- "Standby" signal has main priority on pump's enabling / disabling.

IF NOT USED, PROTECT THE MINI DIN PLUG WITH THE BLACK RUBBER CAP LOOSE IN THE ACCESSORIES BAG.

8. BASIC SETTINGS

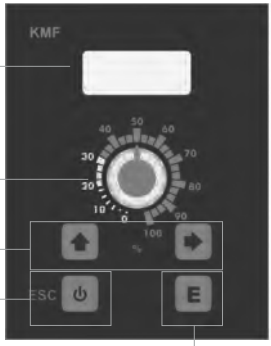

LCD backlit display

Storke Lenght Knob

Scroll and increase digit

Turn the pump on or off and exit from setup menu (without saving parameters)

Enter / exit from setup menu (saving parameters)

The "KMS DC" pump is equipped with a keyboard.To avoid any misunderstanding during next chapters all keys will be described as shown on this legend:

▲ "UP" key

ON/OFF ESC "ESC" key

▶ "RIGHT" key

E "E" key

Menu navigation:

To enter into programming mode press and keep pressed **"E" key** from main screen (fig.3):

STROKES
100 SPM

fig.3

After about 4 seconds the pump will show the password screen (fig.5):

password
0000

fig.5

Default password is "0000". Just press **"E"** key. Otherwise insert password using **"UP"** and **"RIGHT"** keys.

Saving / Discarding changes / Activating working mode

Once edited data into setup menu it's possible to save them by pressing "E" key or to discard them by pressing "ESC" key.

To activate a working mode (Constant) select the required mode and confirm it using "E" key.

Turning on and off the pump

"ESC" key has a double function. It can be used to discard all changes made into setup mode or to turn on/off the pump. To turn on/off the pump press and keep pressed this key while in main screen (fig.3). The pumps will show:

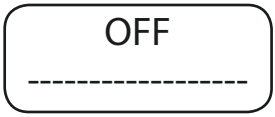

fig.6

To return into operating mode press "ESC" key.

Alarm output logical working.

The pump has an "Alarm" output that changes its status (from N.O. to N.C. or viceversa) when a signal is received from "LEVEL" and/or "STAND-BY". To set this alarm refer to related chapter.

Next time the SETUP menu will be reached it will possible to operate with "SHORT" menu configuration to change only selected mode parameters as shown in fig. B. Press "E" to confirm.

Note: "SHORT" menu option is not available during first time into SETUP menu or after a reset.

PRIMING

To proceed follow these steps: connect all hoses to the pump; open dischage valve by completely turning the discharging knob (counter clock-wise). Power up the pump and turn stroke lenght knob to 100%. After pump's intro (fig.1):

KMS DC
R: 1.xx

fig.1

the pump will show the "Delay" (pump's activation delay) as shown fig.2:

WAITING
00:59

fig.2

Press any key to skip the "Delay". Pump will show "Srokes" (actual strokes) as shown in fig.3:

STROKES
100 SPM

fig.3

Press and keep pressed the "RIGHT" key to enter into priming mode. Pump will go for 30 seconds into priming mode as shown in fig.5.

PRIMING
30 Sec.

fig.4

When the chemical begins to flow out from the outgassing hose then completely close the outgassing knob (except for self-venting pump heads). This ends the priming procedure. If countdown for priming is not yet ended press "ESC" key.

Now the pump is operative. Proceed to setup and programming.

Pump's functions summary

During pump's working mode is it possible to see furthers working information.
Press more times the "UP" key to cycle through following information:

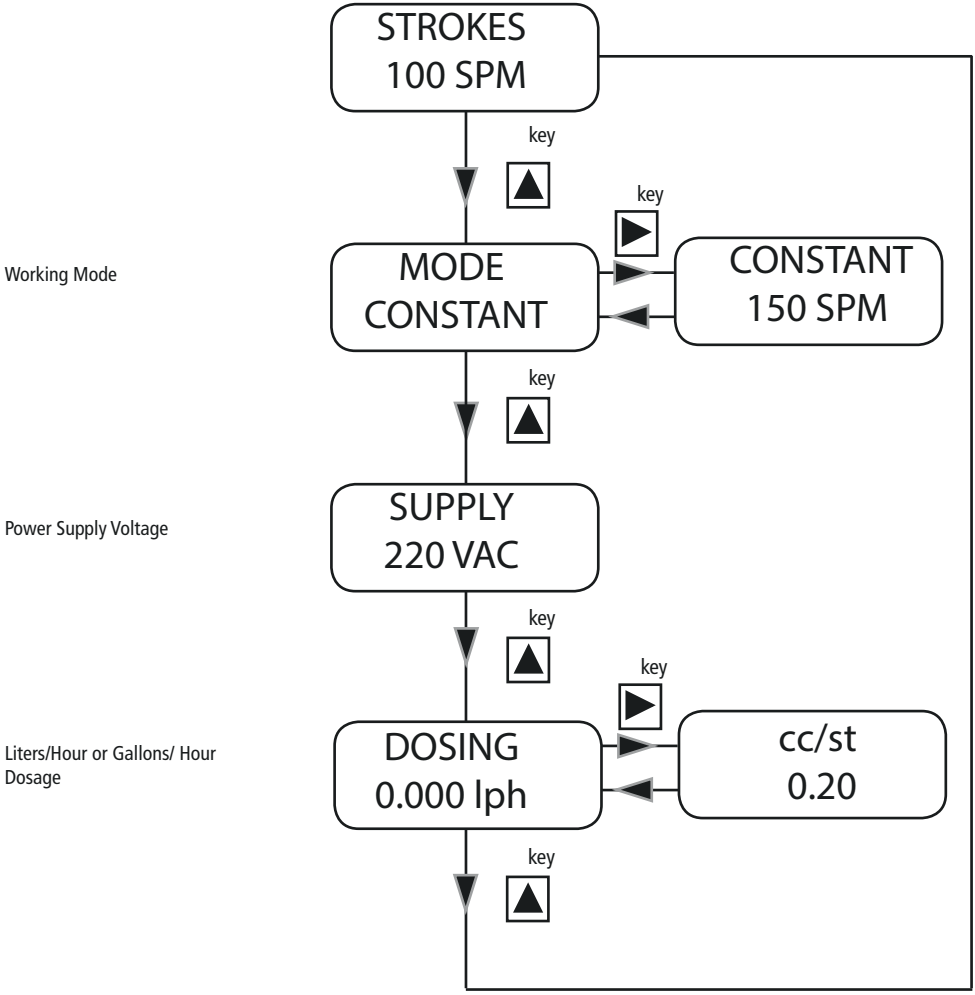

10. PUMP'S FUNCTIONS SUMMARY- ALARMS

If any alarm is active, in the menù "**Pump's functions summary**" a general alarm display will show the **number** of alarm active at the moment. Enter into this menu with "**RIGHT**" key.
The windows displayed show which alarms are active.

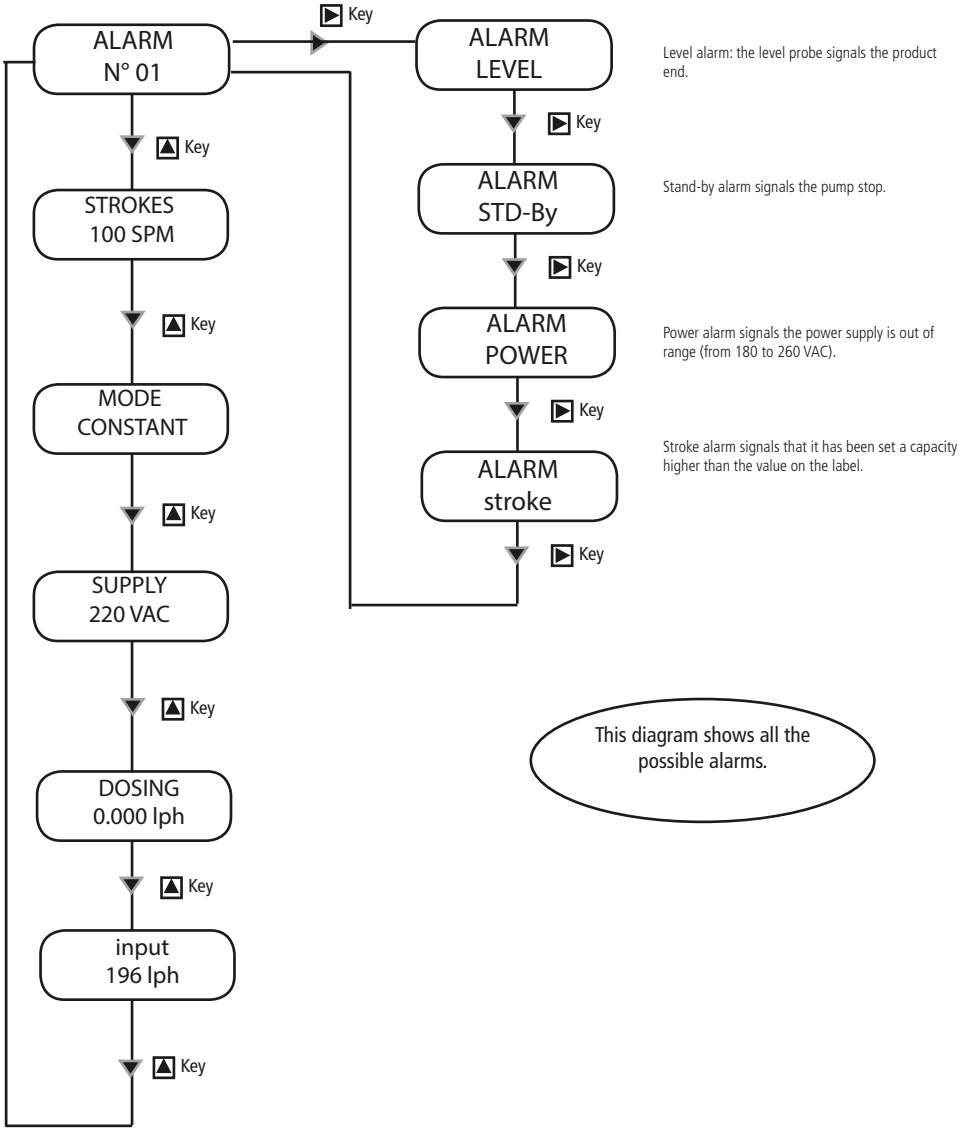

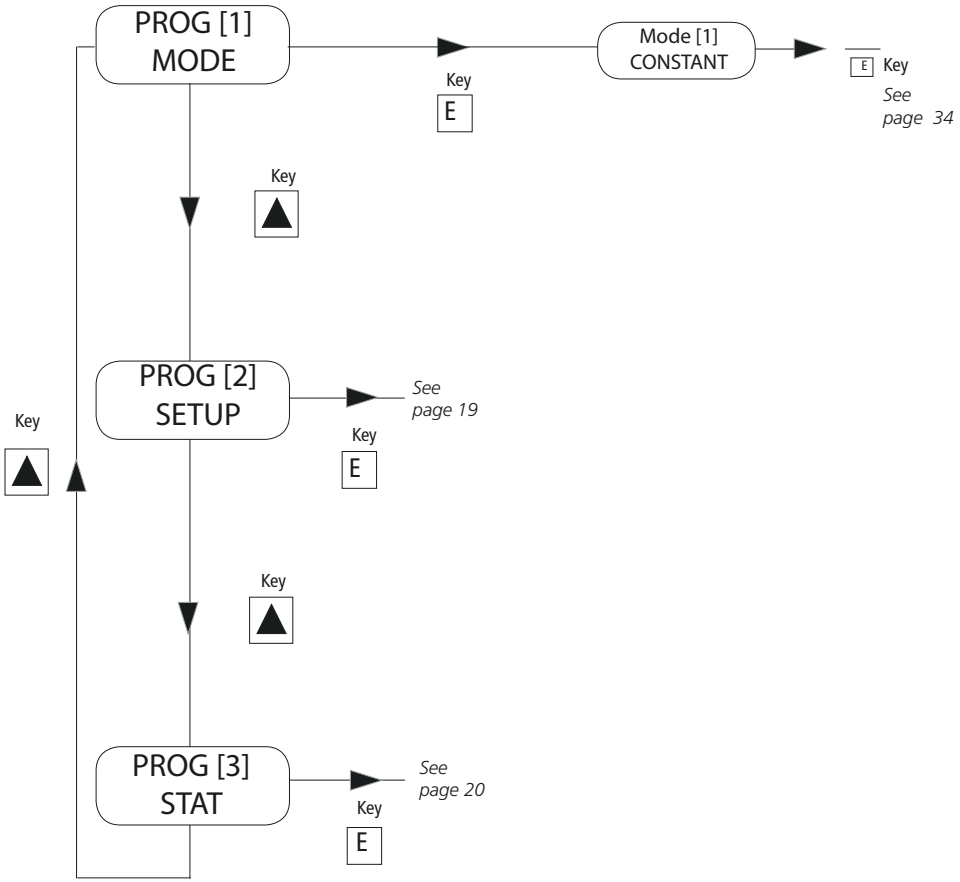
PROG [1]
MODE
Key
E
Mode [1]
CONSTANT
E Key
See
page 34
Key
PROG [2]
SETUP
See
page 19
Key
E
Key
Key
PROG [3]
STAT
See
page 20
Key
E

12. QUICK GUIDE - MAIN MENU (PROG [2] SETUP)

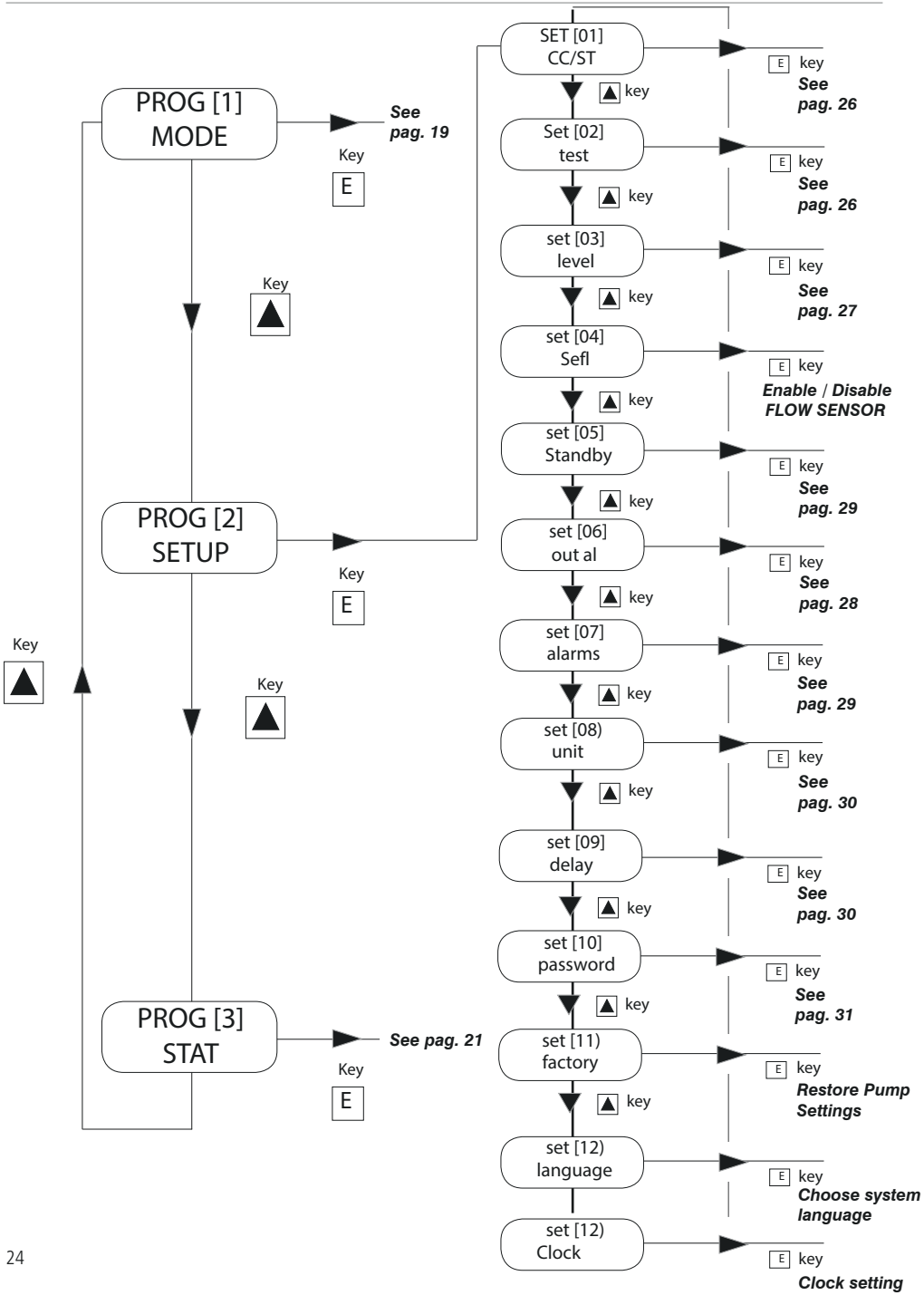

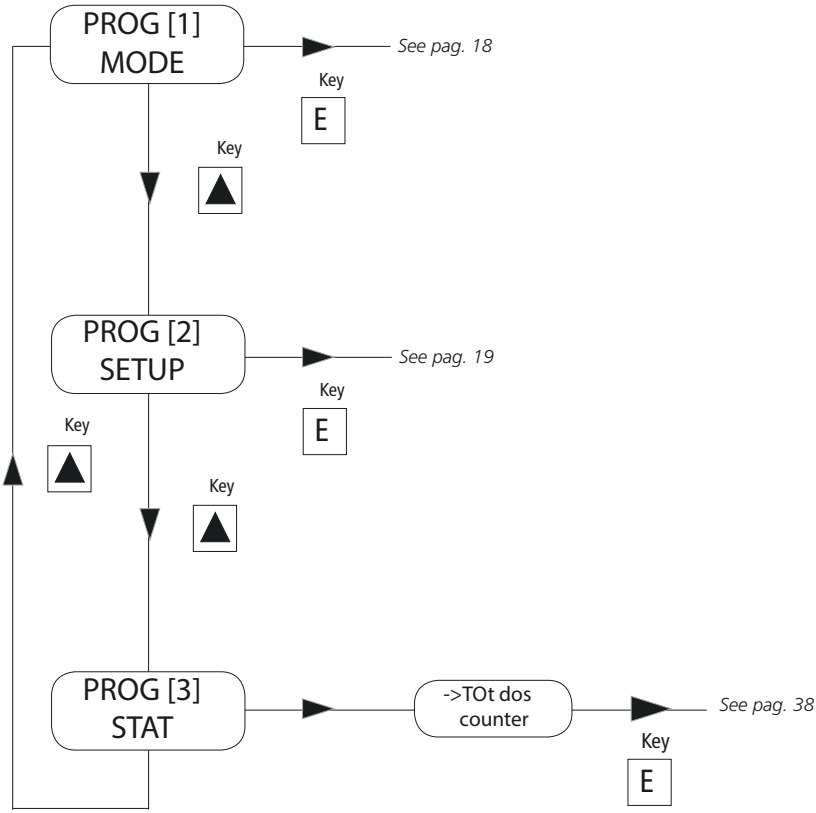
PROG [1]
MODE
See pag. 18
Key
E
Key
PROG [2]
SETUP
See pag. 19
Key
E
Key
Key
PROG [3]
STAT
->TOt dos
counter
See pag. 38
Key
E

Pump's initial setup

Apart of choosen working mode, the pump must be prepared to operate by setting the main parameters into "SETUP" menu. To enter into this menu please follow the "Quick Guide through menu" at page 20.

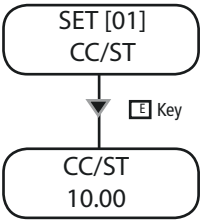

CC per Stroke.

Enter here the cc/stroke value obtained during "Test" mode (calibration).

Use "UP" key to increase of one unit the blinking digit "_".

Press "RIGHT" key to skip on next digit.

Press "E" key to save data and "ESC" exit to main menu.
Otherwise press "ESC" to discard data and exit to main menu.

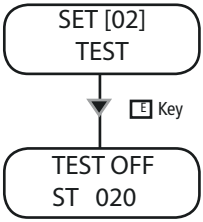

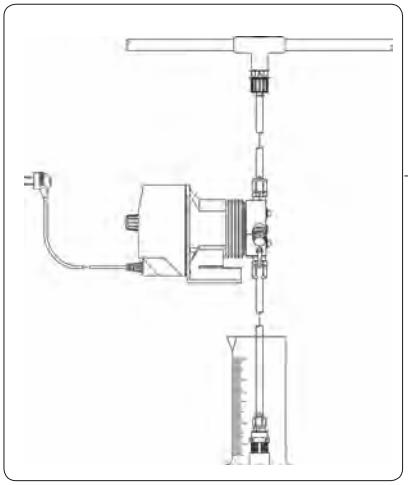

Calibration.

This procedure defines the cc quantity (cubical centimeters) that the pump feed every single injection. To determine this value the pump must be calibrated.

1) Install the pump on plant and insert the suction hose (with its level probe / foot filter) into a BEKER "test-tube".
If pump's model is self-priming put the discharge hose into the "test-tube" too.

2) Power up the pump and turn the flow's knob to required position.

3) Fill up the "test-tube" with the chemical until to reach a known value.

4) From setup menu choose "TEST", and insert 20". This value is the strokes that the pump will produce during the procedure.

6) Press "E". The pump will begin to produce the 20 strokes and to suck the chemical from the "test-tube".

TEST ON
ST 020

7) At the end of 20 strokes the pump will stop. Read the value of chemical left into "test-tube".

8) Substract the initial value to the left value.

9) Divide the result with the ST value (20).

10) Type this value into "CC/ST" (Set [01]) as previously described.

11) If obtained result is too small or too big, please, try to change strokes value (20).

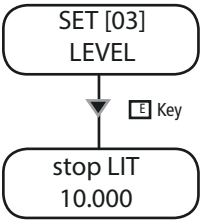

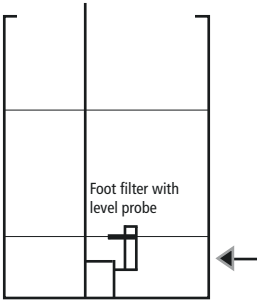

Customizable Reserver (liters / gallons)

Pre Level Alarm (Reserve).

This function defines a pre-alarm status to inform user that the dosing product is near to end. Reserve value to be set, must be calculated on product quantity left between foot filter and pump's suction level.

- Use "UP" key to increase the blinking "_" digit.
- Press "RIGHT" key to skip on next digit.
- Press "E" key to save data and "ESC" exit to main menu.

Otherwise press "ESC" to discard data and exit to main menu.

During the alarm the pump continues to dose but it'll show the following picture:

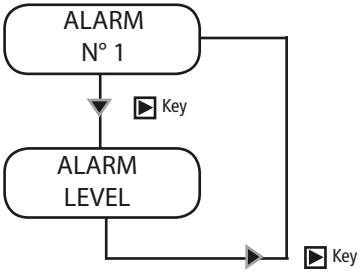

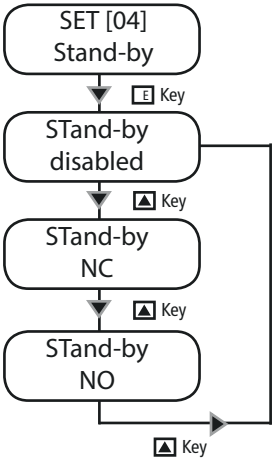

"Stand-By" signal.

This function allows the pump to dose only when an external signal is received from "Stand-by" input. This signal can be enabled as a N.O. contact (Normally Opened) , N.C. contact (Normally Closed) or disabled.

- Use "UP" key to change working mode for "Stand by" signal.

-Press "E" key to save data and "ESC" to exit to main menu. Otherwise press "ESC" to discard data and exit to main menu.

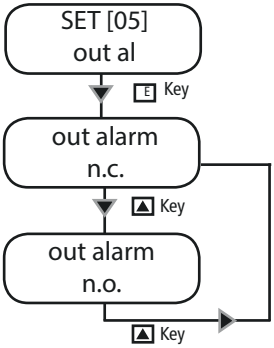

"Out Alarm" signal.

This function allows to manage the alarm output contact . The alarm can be set as "N.O." contact (Normally Open) or "N.C." contact (Normally Closed).

- Use "UP" key to change working mode for "Out Al" signal.

-Press "E" key to save data and exit to main menu. Otherwise press "ESC" to discard data and exit to main menu.

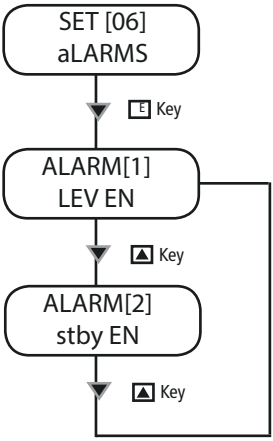

Alarms Management.

Use this function to enable/disable the relay output for level alarm (lev) and/ or standby (stby).

If alarm is activated for one or more events then the output relay will be enabled, the pump will show the alarm status and it'll stop or not the dosing activity.

If alarm is not activated for one or more events then the output relay will be disabled, the pump will show the alarm status and it'll stop or not the dosing activity.

- Use "UP" key to choose the alarm to set.

-Use "RIGHT" key to enable (EN) or disable (DI) the alarm.

-Press "E" key to save data and "ESC" to exit to main menu. Otherwise press "ESC" to discard data and exit to main menu.

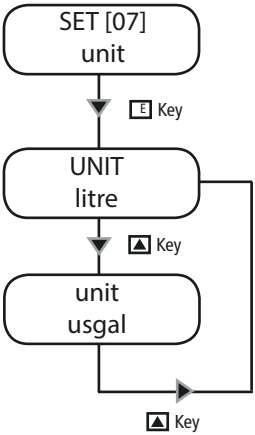

Unit Change.

This function allows to choose between liters or gallons measurement unit.

-Use "UP" key to switch between liter or gallons measurement unit.

-Press "E" key to save data and "ESC" to exit to main menu. Otherwise press "ESC" to discard data and exit to main menu.

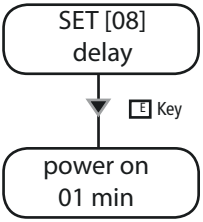

Startup Delay Setup.

When the pump is powered is it possible to have a delay time (from 0 to 10 minutes) before dosing activities.

-Use "UP" key to choose the alarm to set.

-Use "RIGHT" key for next digit.

-Press "E" key to save data and "ESC" to exit to main menu. Otherwise press "ESC" to discard data and exit to main menu.

Note: Press any key during delay time to skip it.

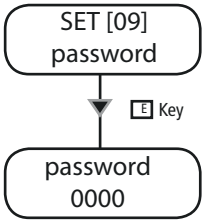

Password Setup.

"Setup" menu is password protected. Default value to enter into "setup" menu is "0000" (only numeric units). To change this password proceed as follows:

- Use "UP" key to change first digit.

-Press "RIGHT" key to move cursor over next digit.

-Press "E" key to save data and "ESC" to exit to main menu. Otherwise press "ESC" to discard data and exit to main menu.

Note: For lost password, please, follow the "Load default" procedure.

"LOAD DEFAULT" procedure

This procedure deletes all programming data set. It reloads the default data of the pump.

Follow this instructions:

- unplug power supply;

- pressing both "UP" and "RIGHT" keys, plug in power supply.

For few seconds, the display shows LOAD DEFAULT before start up the pump.

"RESET PASSWORD" procedure

This procedure resets the password set and reloads the default password of the pump ("0000").

Follow this instructions:

- unplug power supply;

- pressing both "UP" and "ESC" keys, plug in power supply.

For few seconds, the display shows RESET PASSWORD before start up the pump.

Introduction.

CONSTANT mode.
Pump doses at a constant rate set in "SPH" (strokes for hour), "SPM" (strokes for minute) or "LPH" (litres per hour) parameters set during program session.

When to use this mode ?
This mode is useful when there isn't an input signal to control the dosing activity. Pump doses requested product quantity in constantly.

Which parameters must be set ?
SPH (strokes per hour), SPM (strokes per minute) LPH (litres per hour)

CONSTANT mode.

Pump doses at a constant rate set in"SPH" (strokes for hour), "SPM" (strokes for minute), "LPH" (litres per hour) parameters set during program session.

Which parameters must be set ?
SPH (strokes per hour), SPM (strokes per minute), LPH (litres per hour).

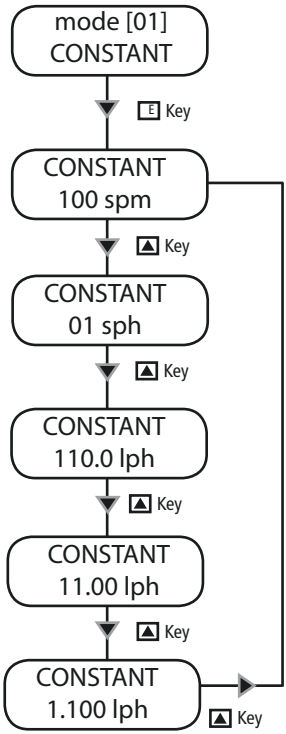

Choose "CONSTANT" working mode: "SPH" (strokes per hour), "SPM" (strokes per minute), "LPH" (litres per hour).

Use "UP" key to choose between these two modes. Use "RIGHT" key to change value. For next digit press again "RIGHT" key.

"LPH" value accuracy depends on cc/st value set into the Setup menu (SET [01] CC/ST).
LPH max value depends on the max frequency of the pump (refer to the pump's label). If an higher value is set, the pump will show an alarm message (ALARM STROKE).

Press "E" key to save data and "ESC" to exit to main menu. Otherwise press "ESC" to discard data and exit to main menu.

Note: last mode displayed before press the "E" key will be the active one.

Stat.

To see dosing statistics choose "STAT" from main menu.

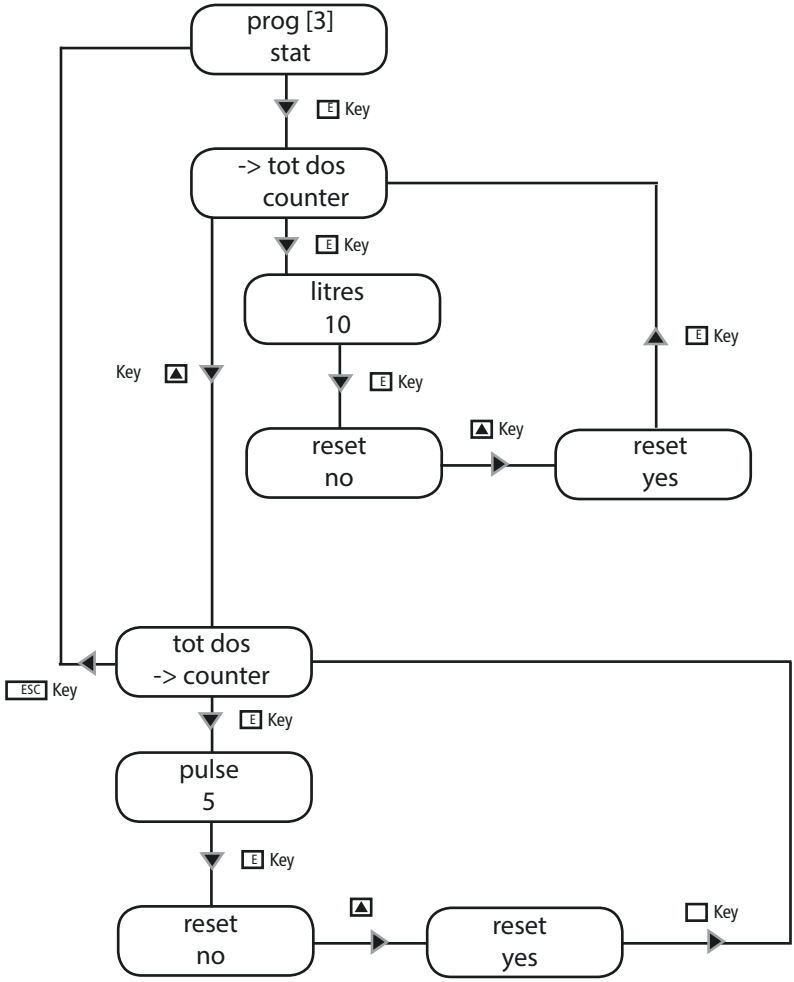

"TOT DOS" means total dosed product since pump last reset.
"COUNTER" means strokes numbers since pump last reset.

Problem	Possible Cause
Pump doesn't turn on.	Pump isn't powered. Connect it to main supply. Pump's protection fuse is broken. Replace it. See page 37 for replacement procedure. Pump's main board is broken. Replace it. See page 37 for replacement procedure.
Pump is not dosing and solenoid is operating.	The foot filter is obstructed. Clean it. Suction hose is empty. Pump must be primed. Repeat priming procedure. Air bubbles inside hydraulic circuit. Check valves - hoses - fittings. Product to dose is generating gas. Turn discharge knob and let air flow away. Use a self-venting pump head.
Pump is not dosing and solenoid isn't operating or slightly operating.	Crystals presence inside valves. Check them and try to dose 2-3 liters of normal water. Change valves. Injection valve obstructed. Change it.
Pump's display shows "ERROR MEM" o "ERROR DATA"	ERROR MEM: error in data storage. it is necessary to reload pump's default data, as described in "Load default procedure" on page 32. ERROR DATA: error in data setting. Check the values set. If they are correct, but the message still appears, the pump is underdimensioned.

20. FUSE AND MAIN BOARD REPLACEMENT

Fuse or main board replacement is allowed to qualified personnel only. Before to operate disconnect the pump from main power and all hydraulic connections.

For fuse replacement is necessary to use a 3x16 and 3x15 screwdriver and a new fuse (same model of old one).

For main board replacement is necessary to use a 3x16 and 3x15 screwdriver and a new main board (same model of old one).

Fuse replacement procedure:

- Turn pump's injection knob on 0%.
- Remove 6 screws from pump's back.
- Pull pump's back cover until it's completed separated from pump's front. Be careful of the knob's spring.
- Locate the blown fuse and replace it.
- Reassemble the pump. Be careful to put back the knob's spring.
- Reinsert screws.

Main board replacement procedure:

- Turn pump's injection knob on 0%.
- Remove 6 screws from pump's back.
- Pull pump's back cover until it's completed separated from pump's front. Be careful of the knob's spring.
- Remove board's screws.
- Completely disconnect wires from main board and replace it. Reinsert screws.
- Reconnect wires to the main board (see enclosed picture).
- Reassemble the pump. Be careful to put back the knob's spring.
- Reinsert screws.

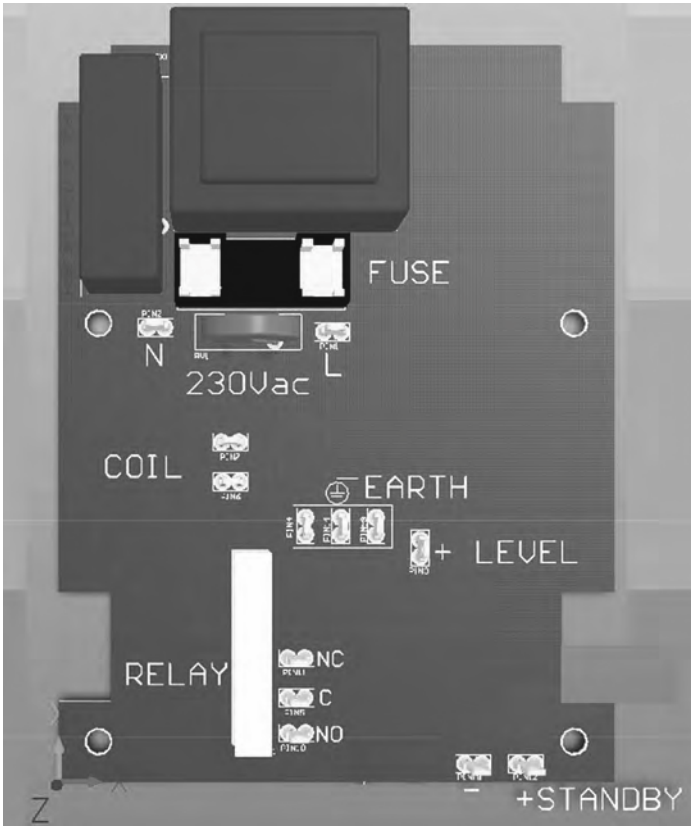
FUSE
N
L
230Vac
COIL
EARTH
+ LEVEL
RELAY
NC
C
NO
–
+STANDBY

Maintenance schedule

In order to ensure the requirements of potable drinking water treated and the maintenance of the improvements as declared by the manufacturer, this equipment must be checked at least once a month.

OPERATOR PROTECTION
Use safety equipment according to the company regulations.
Use this safety equipment within the work area during installation, service and when handling chemicals:
- **protective mask**
- **protective gloves**
- **safety goggles**
- **ear plugs or hear muffs**
- **further security device, if necessary.**

POWER SUPPLY DISCONNECTION
Always disconnect power to the motor before you perform any installation or maintenance tasks. Failure to disconnect power will result in serious physical injury.

Installation and maintenance tasks should be carried out by AUTHORIZED AND QUALIFIED PERSONNEL only in accordance with local regulations.

Use original spare parts.

Maintenance inspection

Shutdown the dosing pump before any maintenance operation **Shutdown procedure.**

A maintenance schedule includes these types of inspections:
- Routine maintenance and inspections
- Three-month inspections
- Annual inspections

Shorten the inspection intervals appropriately if the pumped chemical is abrasive or corrosive.

Routine maitenance and inspections
Perform these tasks whenever you perform routine maintenance:
- Inspect the seal. Ensure that there are no leaks from the mechanical seal.
- Check electrical wiring
- Check for unusual noise and vibration (noise allowed 73.4 dbA; ± 5 dB).
- Check the pump and piping for leaks.
- Check for corrosion on parts of the pump and / or on hoses.

Three-month inspections
Perform these tasks every three months:
- Check that the tightenings.
- Check the mechanical seal if the pump has been left idle.

Annual inspections
Perform these inspections one time each year:
- Check the pump capacity (as per nameplate).
- Check the pump pressure (as per nameplate).
- Check the pump power (as per nameplate).

f the pump performance does not satisfy your process requirements, and the process requirements have not changed, then perform these steps:
1. Disassemble the pump.
2. Inspect it.
3. Replace worn parts.

Shutdown procedure

This procedure SHOULD BE CARRIED OUT BY AUTHORIZED AND QUALIFIED PERSONNEL

OPERATOR PROTECTION
Use safety equipment according to the company regulations.
Use this safety equipment within the work area during installation, service and when handling chemicals:
- **protective mask**
- **protective gloves**
- **safety goggles**
- **ear plugs or hear muffs**
- **further security device, if necessary.**

Shutdown the dosing pump before any maintenance operation or before long downtimes.
Disconnect power and ensure it cannot be restarted.

Depressurize the system. The liquid may leak splashing.

Drain the chemical from pump head.
Release the pressure and disconnect the disharge pipe from the discharge valve.
Rinse the pump head and clean all valves.

TECHNICAL FEATURES

Power supply:	230 VAC (190-265 VAC) - 50/60 Hz
Power supply:	115 VAC (90-135 VAC) - 50/60 Hz
Power supply:	24 VAC (20-32 VAC) - 50/60 Hz
Power supply:	12 VDC (10-16 VDC)
Pump Strokes:	0 - 180 (0 - 140 for KMS AC DC)
Suction Height:	1,5 metres
Environment Temperature:	0 - 45°C (32 - 113°F)
Chemical Temperature:	0 - 50°C (32 - 122°F)
Installation Class:	II
Pollution Level:	2
Audible Noise:	73.4 dbA
Packaging and Transporting Temperature:	-10 - 50°C (14 - 122°F)
Protection degree:	IP 65

MANUFACTURING MATERIALS

Case:	PP
Pump head:	PVDF, Acrilic, SS *
Diaphragm:	PTFE
Balls:	CERAMIC, PTFE, SS *
Suction Pipe	PVC
Delivery Pipe:	PVDF
Valve Body:	PVDF, PE, SS *
O-ring:	FP, EP, PTFE *
Injection connector	PVDF (ceramic, HASTELLOY C276 spring)
Level Probe:	PVDF
Level probe cable:	PE
Foot Filter:	PVDF

*as ordered.

TECHNICAL INFORMATION											
KMS	CAPACITY				cc / stroke		Max pressure		imp/min	Hoses	Pump head
	min cc/h	max l/h	Min GPH	Max GPH	min	max	bar	PSI			
1802	0,06	2	0,000016	0,53	0,06	0,19	18	261	180	4 x 6	L
1504	0,11	4	0,000029	1,06	0,11	0,37	15	217	180	4 x 6	L
1005	0,14	5	0,000037	1,32	0,14	0,46	10	145	180	4 x 6	L
0808	0,22	8	0,000058	2,11	0,22	0,74	8	116	180	4 x 6	L
0510	0,28	10	0,000074	2,64	0,28	0,93	5	72	180	4 x 6	L
0501	0,03	1	0,000008	0,26	0,03	0,09	5	72	120	4 x 6	I
0218	0,50	18	0,00013	4,76	0,50	1,67	2	29	180	6 x 8	M

TECHNICAL INFORMATION											
KMSA	CAPACITY				cc / stroke		Max pressure		imp/min	Hoses	Pump head
	min cc/h	max l/h	Min GPH	Max GPH	min	max	bar	PSI			
1801	0,03	1	0,000008	0,26	0,03	0,09	18	261	180	4 x 6	LA
1503	0,08	3	0,000021	0,79	0,08	0,28	15	217	180	4 x 6	LA
103.5	0,10	3,5	0,000026	0,92	0,10	0,32	10	145	180	4 x 6	LA
085.5	0,15	5,5	0,000040	1,45	0,15	0,51	8	116	180	4 x 6	LA
057.5	0,21	7,5	0,000055	1,98	0,21	0,69	5	72	180	4 x 6	LA
0213	0,37	13	0,000098	3,43	0,37	1,20	2	29	180	6 x 8	MA

Flow rate indicated is for H_2O at 20°C at the rated pressure. Dosing accuracy ± 2% at constant pressure ± 0,5 bar.

1802: l/h 2 bar 18
Pump head mod. L

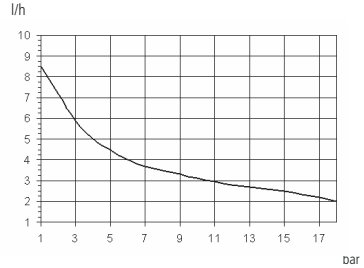

1504: l/h 4 bar 15
Pump head mod. L

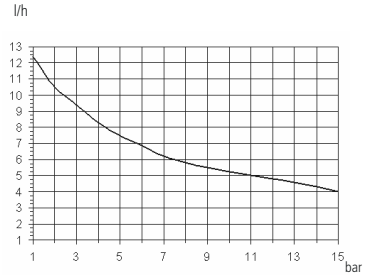

1005: l/h 5 bar 10
Pump head mod. L

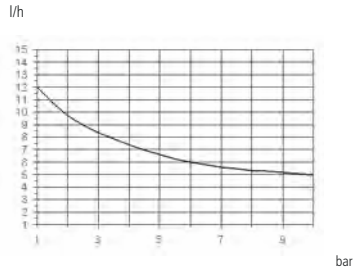

0808: l/h 8 bar 8
Pump head mod. L

0510: l/h 10 bar 5
Pump head mod. L

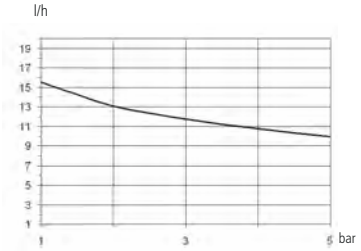

0501: l/h 1 bar 5
Pump head mod. I

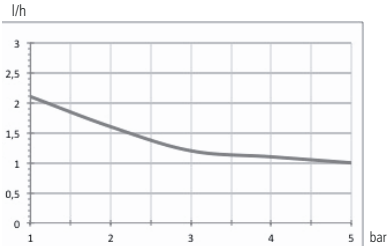

0218: l/h 18 bar 2
Pump head mod. M

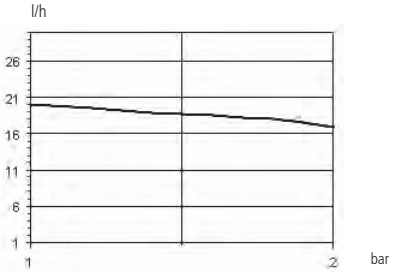

1801: l/h 1 bar 18
Pump head mod. LA

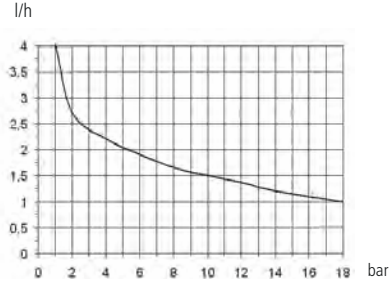

1503: l/h 3 bar 15
Pump head mod. LA

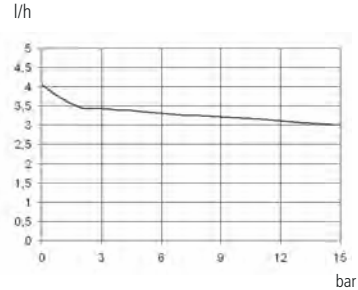

103,5: l/h 3,5 bar 10
Pump head mod. LA

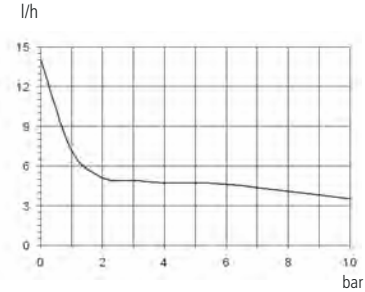

085,5: l/h 5,5 bar 8
Pump head mod. LA

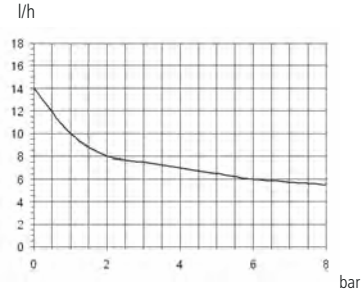

057,5,5: l/h 7,5 bar 5
Pump head mod. LA

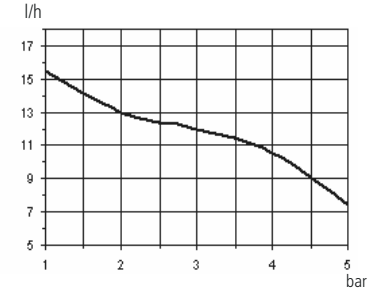

0213: l/h 13 bar 2
Pump head mod. MA

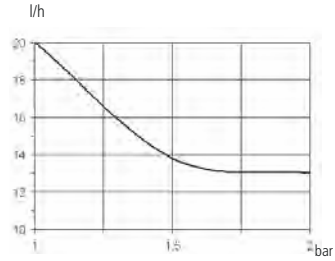

bold : mm
( ) : inches

Dimensions

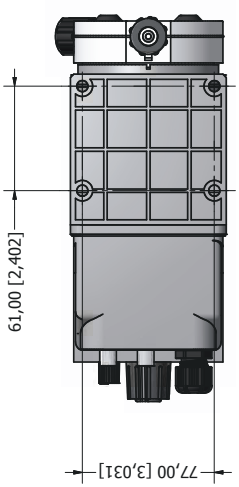

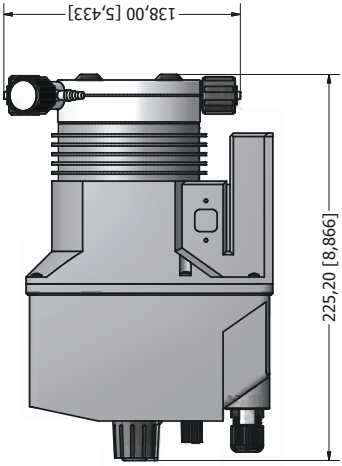

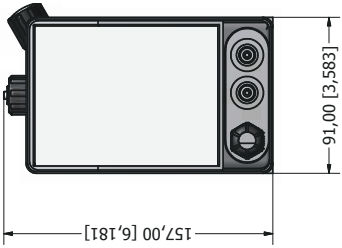

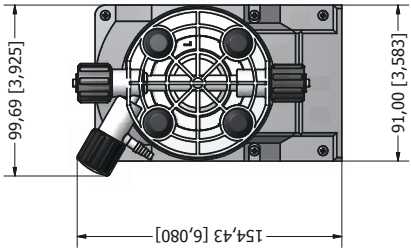

E APPENDIX. CHEMICAL COMPATIBILITY TABLE

Solenoid driven metering pumps are widely used to dose chemical fluids and it is important that the most suitable material in contact with fluid is selected for each application. This compatibility table serves as a useful help in this respect. All the informations in this list are verified periodically and believed to be correct on the date of issuance. All the informations in this list are based on manufacturer's data and its own experience but since the resistance of any material depends by several factors this list is supplied only as an initial guide, in no way manufacturer makes warranties of any matter respect to the informations provided in this list.

Product	Formula	Ceram.	PVDF	PP	PVC	SS 316	PMMA	Hastel.	PTFE	FPM	EPDM	NBR	PE
Acetic Acid, Max 75%	CH3COOH	2	1	1	1	1	3	1	1	3	1	3	1
Hydrochloric Acid, Concentrate	HCl	1	1	1	1	3	1	1	1	1	3	3	1
Hydrofluoric Acid 40%	H2F2	3	1	3	2	3	3	2	1	1	3	3	1
Phosphoric Acid, 50%	H3PO4	1	1	1	1	2	1	1	1	1	1	3	1
Nitric Acid, 65%	HNO3	1	1	2	3	2	3	1	1	1	3	3	2
Sulphuric Acid, 85%	H2SO4	1	1	1	1	2	3	1	1	1	3	3	1
Sulphuric Acid, 98.5%	H2SO4	1	1	3	3	3	3	1	1	1	3	3	3
Amines	R-NH2	1	2	1	3	1	-	1	1	3	3	1	1
Sodium Bisulphite	NaHSO3	1	1	1	1	2	1	1	1	1	1	1	1
Sodium Carbonate (Soda)	Na2CO3	2	3	1	1	1	1	1	1	2	1	1	1
Ferric Chloride	FeCl3	1	1	1	1	3	1	1	1	1	1	1	1
Calcium Hydroxide (Slaked Lime)	Ca(OH)2	1	1	1	1	1	1	1	1	1	1	1	1
Sodium Hydroxide (Caustic Soda)	NaOH	2	1	1	1	1	1	1	1	2	1	2	1
Calcium Hypochlor.(Chlor.ted Lime) [1]	Ca(OCl)2	1	1	1	1	3	1	1	1	1	1	3	1
Sodium Hypochlorite, 12.5%	NaOCl + NaCl	1	1	2	1	3	1	1	1	1	1	2	3
Potassium Permanganate, 10%	KMnO4	1	1	1	1	1	1	1	1	1	1	3	1
Hydrogen Peroxide, 30% (Perydrol)	H2O2	1	1	1	1	1	3	1	1	1	3	3	1
Aluminium Sulphate	Al2(SO4)3	1	1	1	1	1	1	1	1	1	1	1	1
Copper-II-Sulphate (Roman Vitriol)	CuSO4	1	1	1	1	1	1	1	1	1	1	1	1

[1] Calcium Hypochlor.(Chlor.ted Lime): WQA test was based on 1% Calcium Hypochlorite solution.

Resistance rating

Resistant	1
Fairly resistant	2
Not resistant	3

MATERIALS

Polyvinyldene fluoride	PVDF	Pump Heads, valves, fitting, tubing
Polypropylene	PP	Pump Heads, valves, fitting, level floater
PVC	PVC	Pump Heads
Stainless steel	SS 316	Pump Heads, valves
Polymethyl Metacr.(Acrylic)	PMMA	Pump Heads
Hastelloy	C-276	Injection valve spring
Polytetrafluoroethylene	PTFE	Diaphragm
Fluorocarbon (Viton® B)	FPM	Sealings
Ethylene propylene	EPDM	Sealings
Nitrile	NBR	Sealings
Polyethylene	PE	Tubing

F APPENDIX. HOSES RESISTANCE TABLE

Hose features are very important for a reliable dosage. Every pump's model is made to work in the best way using selected hoses according to pump's capacity / model. Information reported here are intended for standard use only. For extended information ask to hose's manufacturer.

Suction / Delivery Hose			
4x6 mm PVC (transparent)	4x8 mm PE (opaque)	6x8 mm PE (opaque)	8x12 mm PVC (transparent)

Delivery Hose	Working Pressure				Breaking Pressure			
	20°C	30°C	40°C	50°C	20°C	30°C	40°C	50°C
4x6 mm PE 230 (opaque)	12 bar	10.5 bar	8.5 bar	6.2 bar	36 bar	31.5 bar	25.5 bar	18.5 bar
4x8 mm PE 230 (opaque)	19 bar	15.7 bar	12 bar	7.5 bar	57 bar	47 bar	36 bar	22.5 bar
6x8 mm PE 230 (opaque)	8.6 bar	6.8 bar	4.8 bar	2.3 bar	26 bar	20.5 bar	14.5 bar	7 bar
8x12 mm PE 230 (opaque)	12 bar	10.5 bar	8.5 bar	6.2 bar	36 bar	31.5 bar	25.5 bar	18.5 bar

	20°C	30°C	40°C	50°C	60°C	80°C	90°C
4x6 mm PVDF Flex 2800 (opaque)	40 bar	34 bar	30 bar	27 bar	24.8 bar	20 bar	10 bar
6x8 mm PVDF Flex 2800 (opaque)	29 bar	25.5 bar	22 bar	20 bar	18 bar	14.5 bar	7.3 bar
8X10 mm PVDF Flex 2800 (opaque)	18 bar	15.5 bar	13.5 bar	12.5 bar	11.2 bar	9 bar	4.5 bar

	20°C
¼ PE 230 (opaque)	17.6 bar
⅜ PE 230 (opaque)	10.6 bar
½ PE 230 (opaque)	10.6 bar

CONNECT ALARM OUTPUT WIRES OF DUTY PUMP TO STAND-BY INPUT OF STAND-BY PUMP

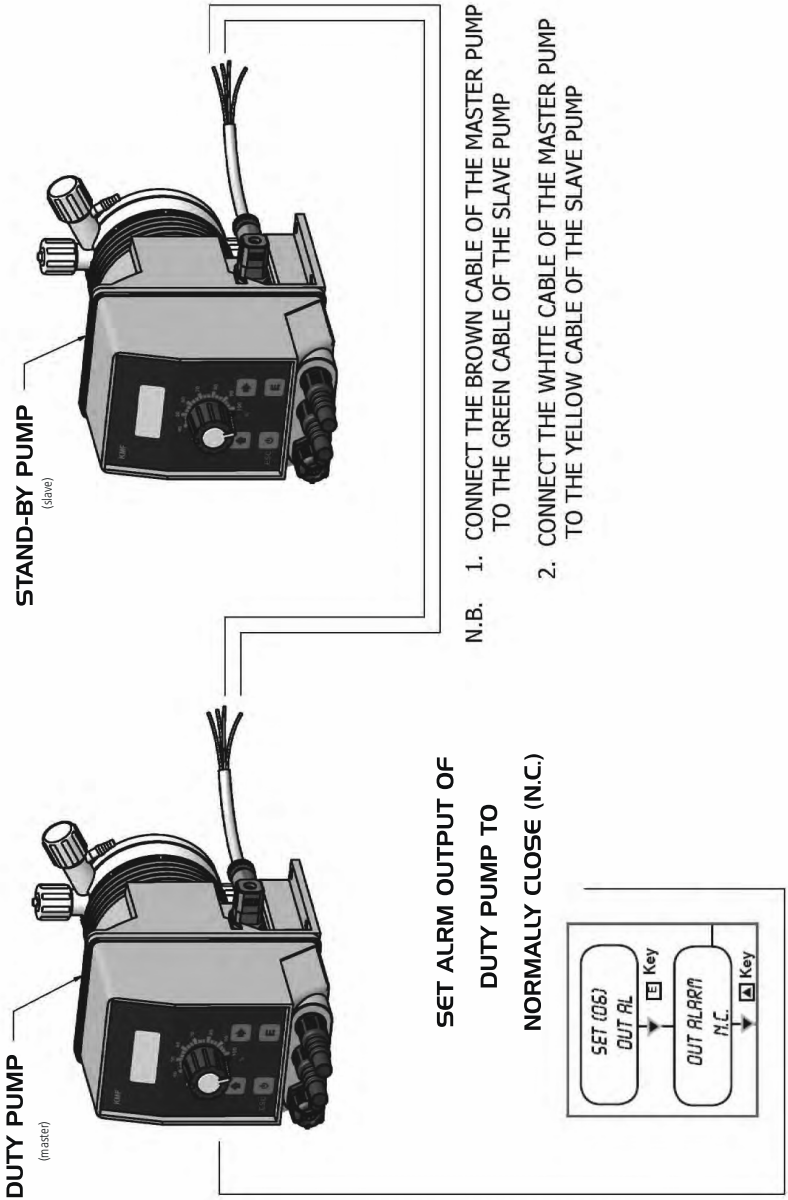

N.B. 1. CONNECT THE BROWN CABLE OF THE MASTER PUMP TO THE GREEN CABLE OF THE SLAVE PUMP

2. CONNECT THE WHITE CABLE OF THE MASTER PUMP TO THE YELLOW CABLE OF THE SLAVE PUMP

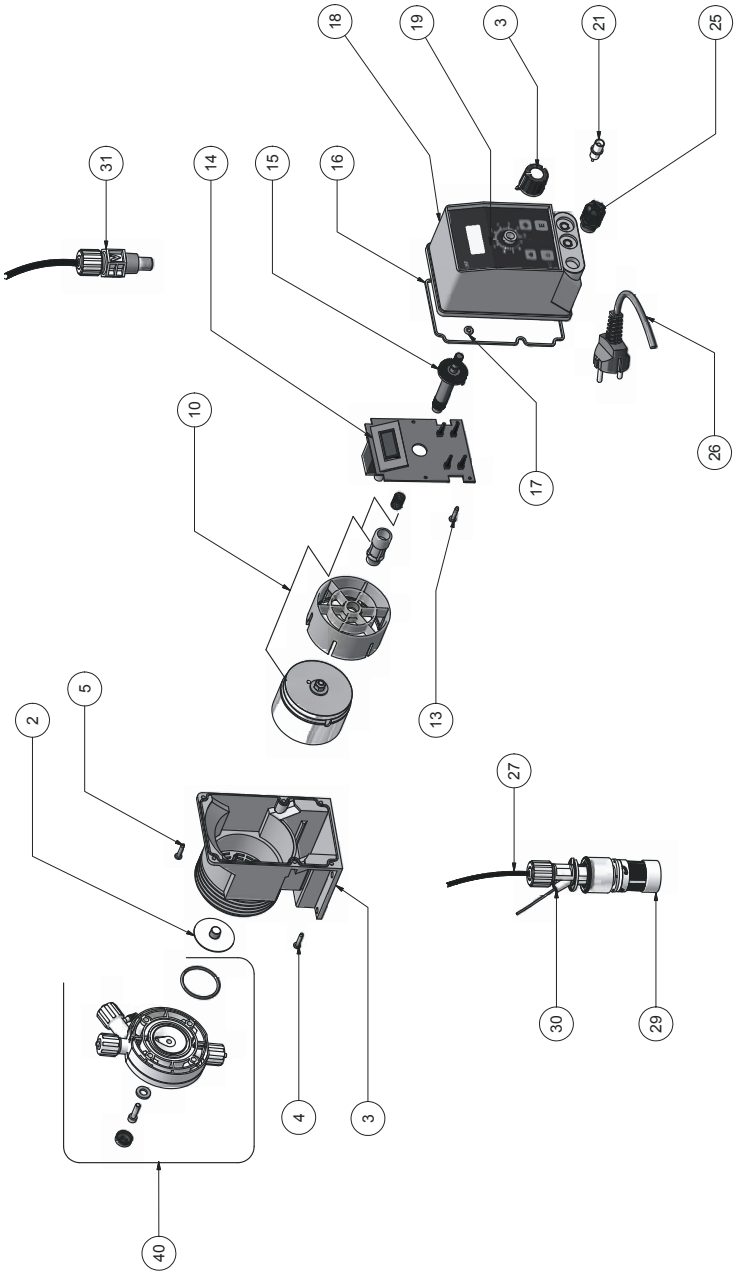

NOTICE: always specify the pump's label when ordering spare parts.

PRODUCT SERVICE REPAIR FORM

ENCLOSE THE PRESENT FORM TO THE DELIVERY NOTE

DATE .....

SENDER

Company name.....

Address .....

Phone no. .....

Contact person.....

PRODUCT TYPE (see product label)

DEVICE CODE .....

S/N (serial number).....

OPERATING CONDITIONS

Location/installation description .....

.....

Chemical .....

Start-up (date) ..... Running time (approx. hours).....

REMOVE ALL THE LIQUID INTO THE PUMP HEAD AND DRY IT BEFORE PACKAGING IN ITS ORIGINAL BOX.

DESCRIPTION OF PROBLEM

☐ MECHANICAL

- Wear parts.....
- Brekage/other damages .....
- Corrosion.....
- Other.....

☐ ELECTRICAL

- Connections, connector, cables .....
- Operating controls (keyboard, display, etc.) .....
- Elettronics.....
- Other.....

☐ LEAKS

- Connections.....
- Pump head .....

☐ NOT OR INADEQUATE FUNCTION/OTHER

.....

.....

.....

I declare that the dosing pump is free of any hazardous chemical.

Signature of the compiler

Company stamp

GENERAL SAFETY GUIDELINES....2
PURPOSE OF USE AND SAFETY....3
LEGEND....3
ENVIRONMENTAL SAFETY....4
LABEL....4
SPARE PARTS....4
TRANSPORTATION AND STORAGE....5

1. INTRODUCTION....6
2. UNPACKING....7
3. PUMP'S DESCRIPTION....8
4. BEFORE TO INSTALL WARNINGS....10
5. INSTALLATION DRAW....11
6. HYDRAULIC INSTALLATION....12
7. ELECTRICAL INSTALLATION....16
8. BASIC SETTINGS....18
9. PRIMING....20
10. PUMP'S FUNCTIONS SUMMARY....21
10. PUMP'S FUNCTIONS SUMMARY- ALARMS....22
11. QUICK GUIDE - MAIN MENU (PROG [1] MODE)....23
12. QUICK GUIDE - MAIN MENU (PROG [2] SETUP)....24
13. QUICK GUIDE - MAIN MENU (PROG [3] STAT)....25
14. SETUP....26
15. "LOAD DEFAULT" AND "RESET PASSWORD" PROCEDURE....32
16. WORKING PROCEDURE SETUP....33
17. "CONSTANT" WORKING MODE....34
18. STATISTICS MANAGEMENT....35
19. TROUBLESHOOTING....36
20. FUSE AND MAIN BOARD REPLACEMENT....37
21. MAIN BOARD....38

A APPENDIX. MAINTENANCE....39
B APPENDIX. CONSTRUCTION MATERIALS AND TECHNICAL INFO....41
C APPENDIX. DELIVERY CURVES....42
C APPENDIX. DELIVERY CURVES FOR SELF-PURGE PUMP HEAD....44
D APPENDIX. DIMENSIONS....45
E APPENDIX. CHEMICAL COMPATIBILITY TABLE....46
F APPENDIX. HOSES RESISTANCE TABLE....47
G APPENDIX. MASTER-SLAVE PUMPS CONNECTION....48
H APPENDIX. EXPLODED VIEW....49

PRECAUTIONS RELATING TO DIRECTIVES, REGULATIONS AND STANDARDS

§ CE/EU and UKCA marking

We guarantee that this product meets the essential requirements of the applicable Directives and Regulations based on the following specifications. Please carefully consider the following specifications for use of the product in European Union member countries and the United Kingdom.

• CE/EU harmonized directives and standards

Directives
DIRECTIVE 2006/42/EC
DIRECTIVE 2014/35/EU
DIRECTIVE 2014/30/EU
DIRECTIVE 2011/65/EU
DELEGATED DIRECTIVE (EU) 2015/863

Harmonized standards
EN ISO 12100
EN 809
EN ISO 20361
EN IEC 61326-1
EN 61010-1
EN IEC 63000

• UKCA harmonized regulations and standards

Regulations
2008 No. 1597
2008 2016 No. 1091
2016 No. 1101
2012 No. 3032

Harmonized standards
BS EN ISO 12100
BS EN 809
BS EN ISO 20361
BS EN IEC 61326-1
BS EN 61010-1
BS EN IEC 63000

Disposal of end-of-life equipment by users

This symbol warns you not to dispose of the product with normal waste. Respect human health and the environment by giving the discarded equipment to a designated collection center for the recycling of electronic and electrical equipment. For more information visit the online site.

When dismantling a pump please separate material types and send them according to local recycling disposal requirements. We appreciate your efforts in supporting your local Recycle Environmental Program. Working together we'll form an active union to assure the world's invaluable resources are conserved.