R990525

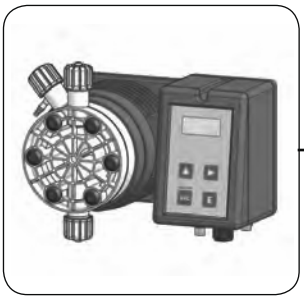

OPERATING INSTRUCTION MANUAL FOR "**TMS DC**" AND "**TMSA DC**" SERIES PUMPS

This operating instructions contains safety information that if ignored can endanger life or result in serious injury. They are indicated by this icon.

Use of this pump with radioactive chemicals is forbidden!

Keep the pump protected from sun and water.
Avoid water splashes.

Read Carefully!

ENGLISH Version
R1-06-10

Product Description *Descrizione Prodotto*	Electromagnetic dosing pump, T and TMS series *Pompa dosatrice elettromagnetiche, serie T e TMS*

Product Identification Codes
(the "_" symbols complete the product code based on the configuration of the variants)
Codici Identificativi Prodotto
(i simboli "_" completano il codice del prodotto in base alla configurazione delle varianti)

TAA _____	TIC _____	TAF _____
TAL _____	TIS _____	TAM _____
TAM _____	TOA _____	TAR _____
TAO _____	TPM _____	TDC _____
TAS _____	TPV _____	TFF _____
TAV _____	TSA _____	TMF _____
TAX _____	TSM _____	TMP _____
TCA _____	TTD _____	TPH _____
TCO _____	TVM _____	TRH _____
TCC _____	TAD _____	

GENERAL SAFETY GUIDELINES

Danger!

In emergencies the pump should be switched off immediately! Disconnect the power cable from the power supply!

When using pump with aggressive chemicals observe the regulations concerning the transport and storage of aggressive fluids!

When installing always observe national regulations!

Manufacturer is not liable for any unauthorized use or misuse of this product that may cause injury, damage to persons or materials.

Caution!

Pump must be accessible at all times for both operating and servicing. Access must not be obstructed in any way!

Feeder should be interlocked with a no-flow protection device.

Pump and accessories must be serviced and repaired by qualified and authorized personnel only!

Always discharge the liquid end before servicing the pump!

Empty and rinse the liquid end before work on a pump which has been used with hazardous or unknown chemicals!

Always read chemical safety datasheet!

Always wear protective clothing when handling hazardous or unknown chemicals!

1. Introduction

1.1 Introduction

Metering Pumps "TMS DC" (TMSA DC self-venting model) Series are the ideal solution for low / middle dosing of chemicals.
All control and setup parameters are available through a digital keyboard and they are displayed on a LCD backlit display. Pump has got: "Standby" input, "LEVEL" input and "Alarm" (contact) output.

Note: some functions described into this manual may need accessories not included into the pump packaging.

1.2 Pump's capacity

Flow rate is determined by the stroke length and by the stroke speed.

1. 3 Working modes

Pump can work in CONSTANT mode.

CONSTANT mode.
Pump doses at a constant rate set in "SPH" (strokes for hour), "SPM" (strokes for minute) or "LPH" (litres per hour) parameters set during program session.

2. Unpacking

Included into package:

n.2	Dibbles ø6
n.2	Self tapping screws 4,5 x 40
n.1	Delayed fuse 5 X 20
n.1	Level probe with axial foot filter (PVDF)
n.1	Injection valve
m 2	Delivery pipe (PVDF)
m 2	Suction pipe (transparent PVC)
m 2	Discharge pipe (transparent PVC)
m 2,5	Signal cable for "Stand-by" and "Alarm"
n.1	This installation manual

* If hose is 6x8 there is only a 4meters long hose.
Cut to obtain suction and delivery hoses.

Remove the contents from the box.

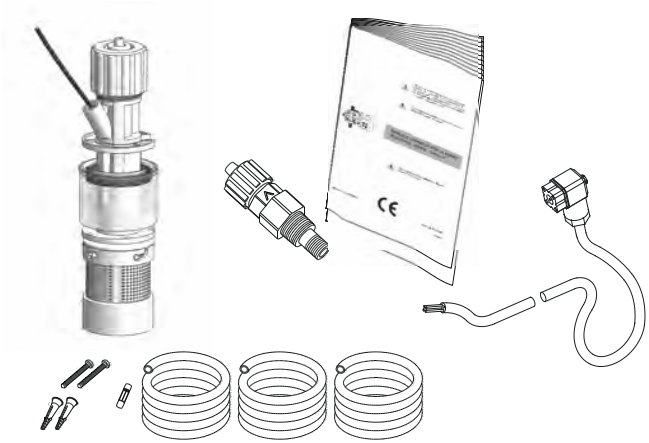

PLEASE DO NOT TRASH PACKAGING.
IT CAN BE USED TO RETURN THE PUMP.

3. Pump's description

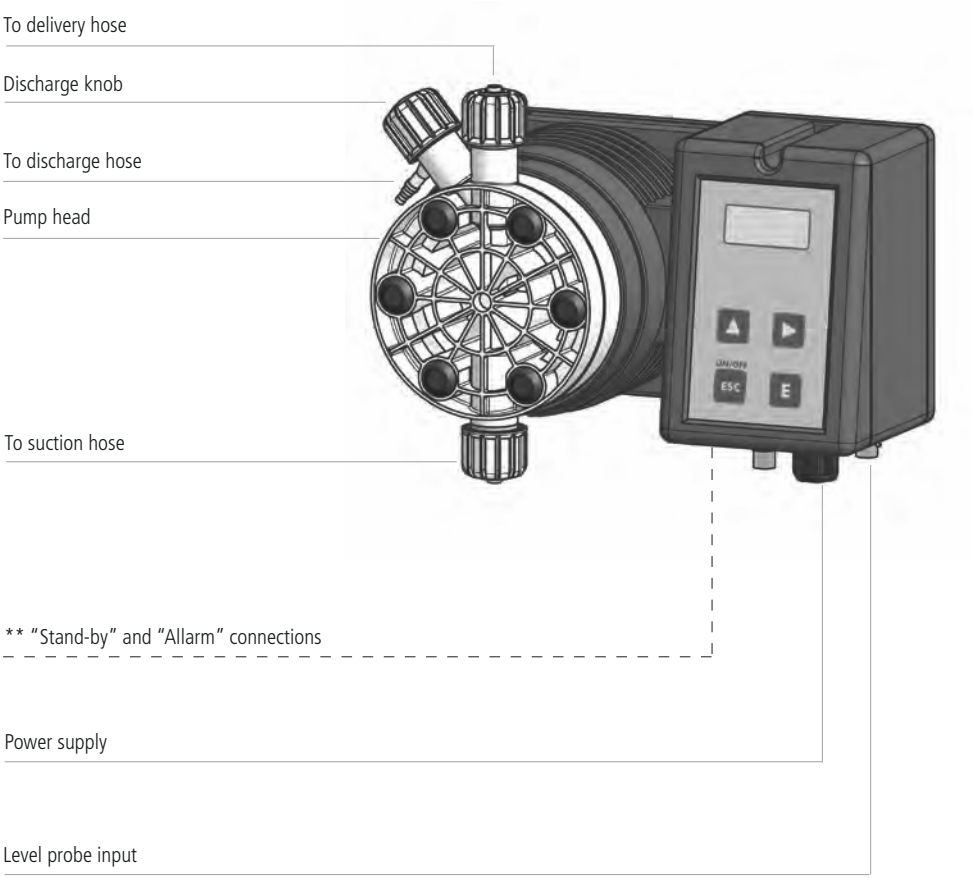

* Note:if knob isn't on 100% position then the pump will dose at pressure greater than the one declared on label.

* *See page 13 for "Stand-by" and "Alarm" connections.

4. Before to Install warnings

Pump's installation and operativity is made in 4 main steps:

Pump's installation
Hydraulic Installation (hoses, level probe, injection valve)
Electrical Installation (main power connection, priming)
Programming the pump.

Before to start, please read carefully the following safety information.

Protective clothes

Wear always protective clothes as masks, gloves, safety glasses and further security devices during ALL installation procedure and while handling chemicals.

Installation location

Pump must be installed in a safety place and fixed to the table / wall to avoid vibration problems!

Pump must be installed in a easy accessible place!

Pump must be installed in vertical position!

Avoid water splashes and direct sun!

Hoses and Valves

Suction and delivery hoses must be installed in vertical position!
All hoses connections must be performed using only hands' force!
No tongs required!

Delivery hose must be firmly fixed to avoid suddenly movements that could damage near objects!

Suction hose must be shorter as possible and installed in vertical position to avoid air bubbles suction!

Use only hoses compatibles with product to dose! See chemical compatibility table. If dosing product is not listed please consult full compatibility table or contact chemical's manufacturer!

Feeder should be interlocked with a no-flow protection device to automatically shut-off the pumps when there is no flow!

Adequate measures shall be taken to prevent cross connection of chemicals!

Chemical feeding must be stopped during backwash cycles and periods of noflow as these conditions may introduce the potential for chemical overdosing. Not doing so may result in elevated chemical concentrations and hazerdous gas introduction into the pool or spa.

5. Installation draw

Pump must be installed in a wall support at a maximum height (**from tank's bottom**) of **1,5 meters**.

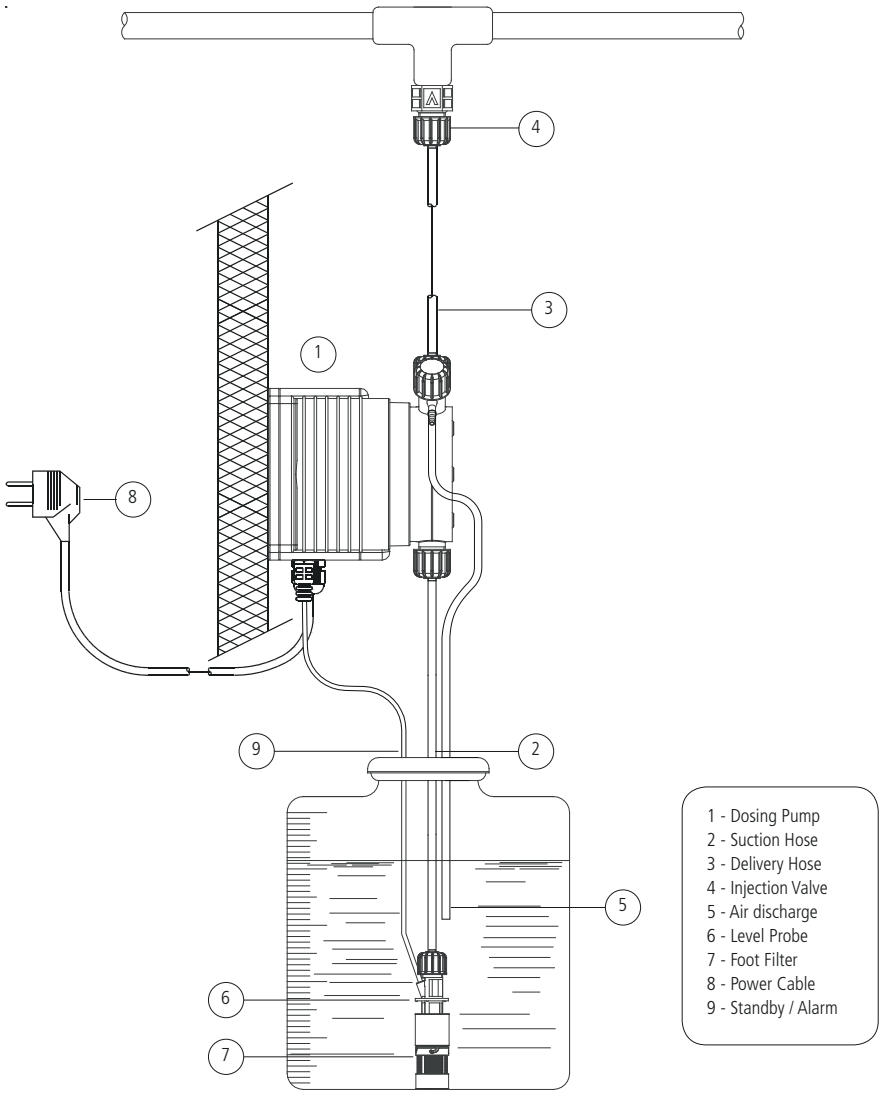

6. Hydraulic installation

Hydraulic connections are:

Suction Hose with level probe and foot filter
Delivery Hose with injection valve
Discharge Hose

6.1 Suction Hose.

Completely unscrew tightening nut from pump's head and remove assembling components: tightening nut, holding ring and pipe holder.

Assembly as shown in fig. (A). Insert hose into pipe holder until it reaches the bottom.

Lock hose on pump's head by screwing down the tightening nut.
Use only hands to do it!

Connect other side of the hose to the foot filter using the same procedure.

fig. (A)

6.2 Assembling foot filter with level probe.

Level probe must be assembled with foot filter using the provided kit.
Foot valve is made to be installed into tank's bottom without sediments priming problem.

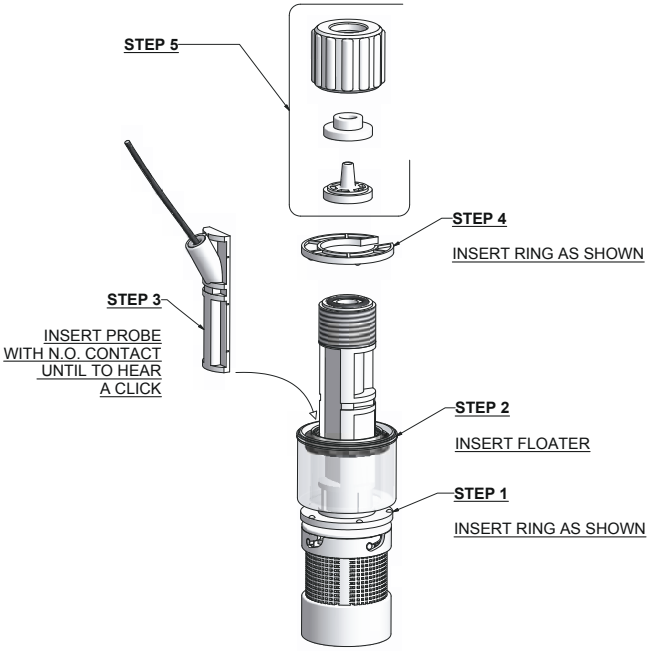

Connect BNC from level probe into pump's level input (front side of the pump).
Put level probe assembled with foot filter into tank's bottom.

Warning: If there is a mixer installed into tank, install a suction lance instead of level probe / foot filter.

6.3 Delivery Hose.

Completely unscrew tightening nut from pump's head and remove assembling components: tightening nut, holding ring and pipe holder.

Assembly as shown in fig. (A). Insert hose into pipe holder until it reaches the bottom.

Lock hose on pump's head by screwing down the tightening nut.
Use only hands to do it!

Connect other side of the hose to the injection valve using the same procedure.

6.4 Injection Valve.

Injection valve must be installed on plant from water's input.
Injection valve will open at pressure greater than 0,3bar.

6.5 Discharge hose.

Insert one side of discharge hose into discharge connector as shown in fig (C).

Insert other side of discharge hose into product's tank.
During priming procedure product exceeding will flow into tank.

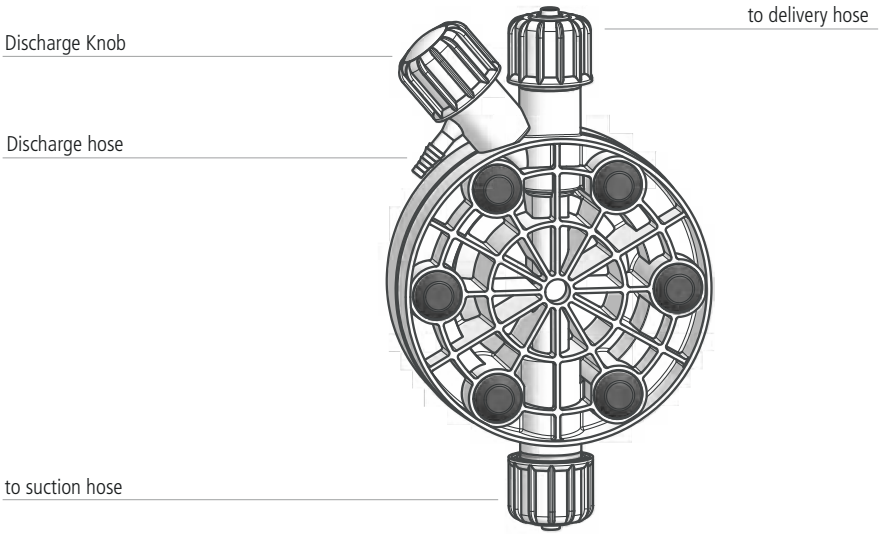

fig (C)

For priming procedure see page 16.

7. Self-Venting pump head installation

7.1 Self-venting pump head.

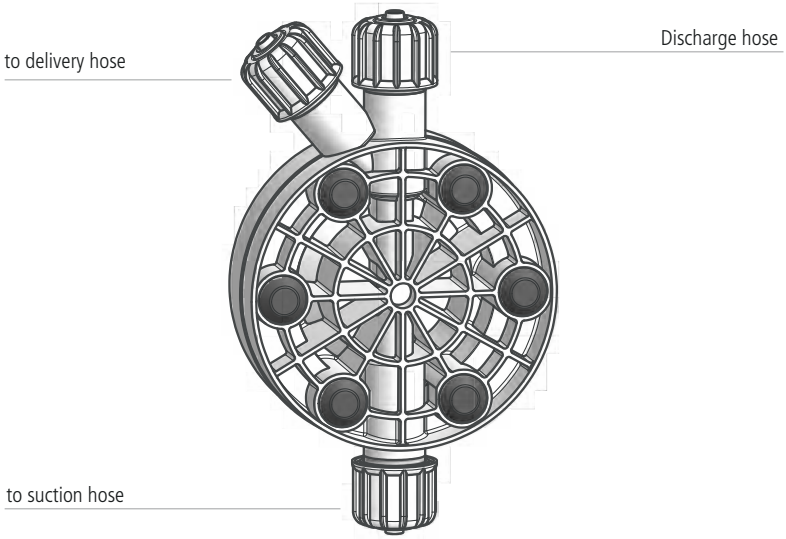

Self-venting pump head must be used when using chemicals that produce gas (i.e. hydrogen peroxide, ammonium, sodium hypoclorite at particular conditions).

Hoses assembling procedure (including purge hose) is described in fig. (A).

Notes:

- suction, delivery and purge valves are DIFFERENT! Do not exchange them!

- delivery and purge hoses are made of same material!

- it's allowed to lightly bend discharge hose!

- during calibration procedure ("TEST") insert discharge hose into BECKER test-tube!

8. Electrical Installation

All electrical connections must be performed by **AUTHORIZED AND QUALIFIED** personnel only.
Before to proceed, please, verify the following steps:

- verify that pump's label values are compatible with main power supply.

- pump must be connected to a plant with a differential switch (0,03A sensitivity) if there isn't a good ground.

- to avoid damages to the pump do not install it in parallel with heavy inductance load (for example: engines). A relay switch must be used. See below picture.

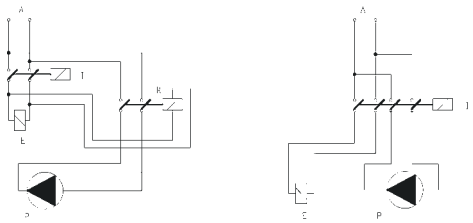

P - Dosing Pump
R - Relay
I - Switch or safety device
E - Electrovalve or inductance load
A - Main Power

Once verified previous steps proceed as follows:

- check that "BNC" of level probe has been connected as described in "Hydraulic Installation" chapter.

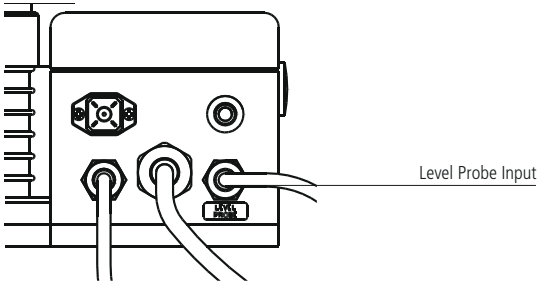

- connect alarm and/or stand-by signal as described below fig (D):

1: (Green) "Stand-by" Input
4: (Yellow) "Stand-by" Ground

2: (Brown) Alarm (Relay) Common
3: (White) N.O. Alarm(Relay) Contact

Max load relay output: 2A 250VAC

fig (D)

Notes:
- "Alarm" signal isn't fuse protected
- "Standby" signal has main priority on pump's enabling / disabling.

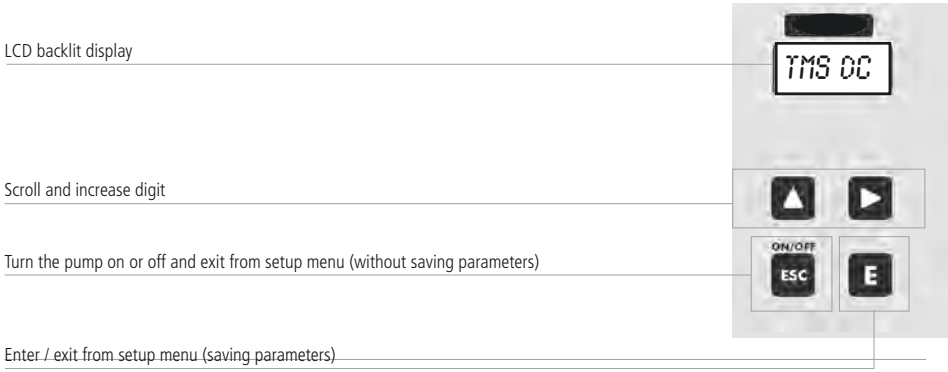

The "TMS DC" pump is equipped with a keyboard.To avoid any misunderstanding during next chapters all keys will be described as shown on this legend:

▲ "UP" key

ON/OFF ESC "ESC" key

▶ "RIGHT" key

E "E" key

Menu navigation:

To enter into programming mode press and keep pressed "E" key from main screen (fig.3):

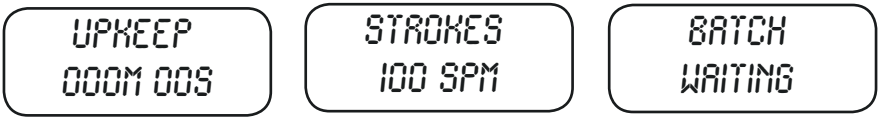

fig.3

Main screen (fig.3) may appear different if "PPM" or "BATCH" mode is enabled. After about 4 seconds the pump will show the password screen (fig.5):

fig.5

Default password is "0000". Just press "E" key. Otherwise insert password using "UP" and "RIGHT" keys.

Saving / Discarding changes / Activating working mode

Once edited data into setup menu it's possible to save them by pressing "E" key or to discard them by pressing "ESC" key.

To activate the working mode (Constant) select the required mode and confirm it using "E" key.

Turning on and off the pump

"ESC" key has a double function. It can be used to discard all changes made into setup mode or to turn on/off the pump. To turn on/off the pump press and keep pressed this key while in main screen (fig.3). The pumps will show:

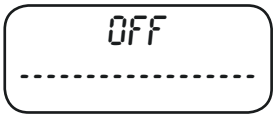

fig.6

To return into operating mode press "ESC" key.

Alarm output logical working.

The pump has an "Alarm" output that changes its status (from N.O. to N.C. or viceversa) when a signal is received from "LEVEL" and/or "SEFL" and/or "STAND-BY". To set this alarm refer to related chapter.

Full menu / Short Menu mode

When entering into SETUP display shows access mode menu:

If this is the first time into SETUP menu then the pump will automatically set itself into "FULL" menu mode as shown in fig. A. Just press "E" key to confirm. This mode will show all pump functions and working modes.

fig. A

fig. B

Next time the SETUP menu will be reached it will possible to operate with "SHORT" menu configuration to change only selected mode parameters as shown in fig. B. Press "E" to confirm.

Note: "SHORT" menu option is not available during first time into SETUP menu or after a reset.

10. Priming

PRIMING

To proceed follow these steps: connect all hoses to the pump; open dischage valve by completely turning the discharging knob (counter clock-wise). Power up the pump and turn stroke lenght knob to 100%. After pump's intro (fig.1):

TMS DC
R: 1.XX

fig.1

the pump will show the "Delay" (pump's activation delay) as shown fig.2:

WAITING
00:59

fig.2

Press any key to skip the "Delay". Pump will show "Srokes" (actual strokes) as shown in fig.3:

STROKES
100 SPM

fig.3

In any working mode, if a SEFL is installed and enabled (see SEFL Setup procedure), the display will show the icon (asterisk as in fig. 4):
- if SEFL works correctly, the asterisk blinks to any pulses given by the solenoid;
- if the asterisk does not appear, there is an anomaly (i.e.: hoses and/or valves are obstructed, SEFL in not connected, etc.).

STROKES
* 100 SPM

fig.4

Press and keep pressed the "RIGHT" key to enter into priming mode. Pump will go for 30 seconds into priming mode as shown in fig.5.

PRIMING
30 SEC.

fig.5

When the chemical begins to flow out from the outgassing hose then completely close the outgassing knob (except for self-venting pump heads). This ends the priming procedure. If countdown for priming is not yet ended press "ESC" key.

Now the pump is operative. Proceed to setup and programming.

11. Pump's functions summary

Pump's functions summary

During pump's working mode is it possible to see furthers working information.
Press more times the "UP" key to cycle through following information:

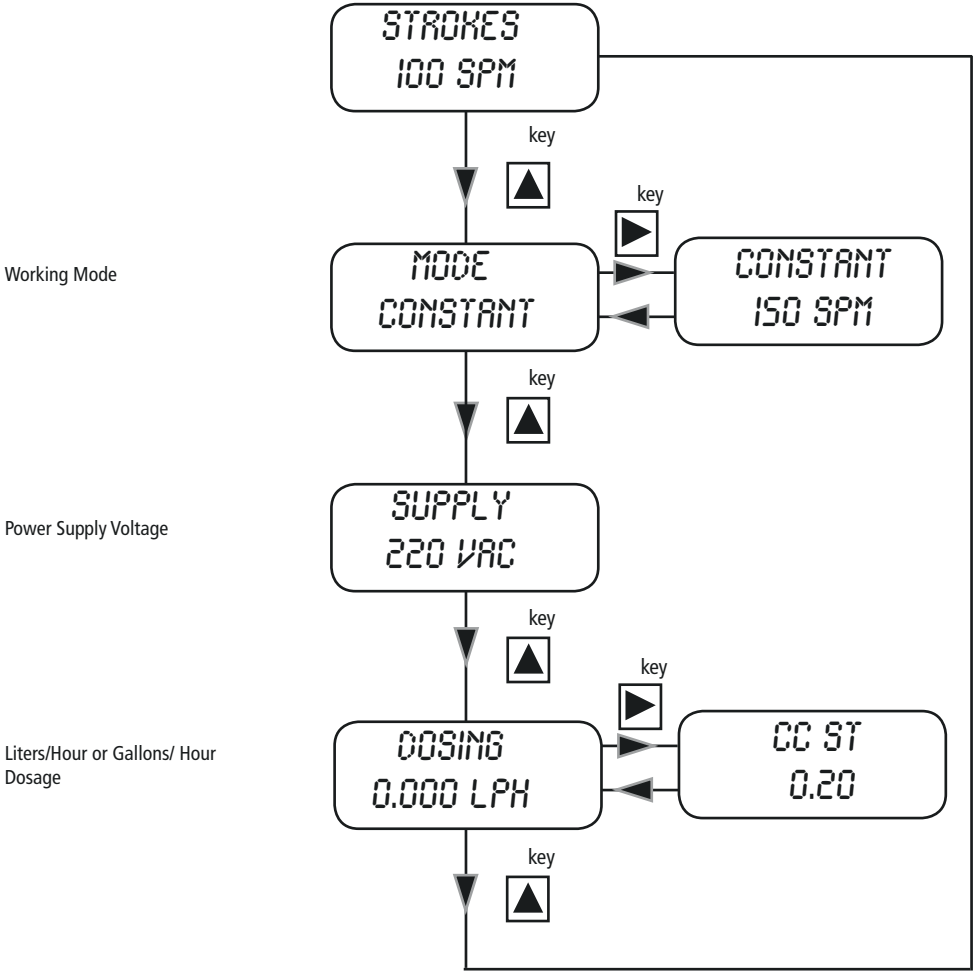

12. Pump's functions summary- ALARMS

If any alarm is active, in the menù "**Pump's functions summary**" a general alarm display will show the **number** of alarm active at the moment. Enter into this menu with "**RIGHT**" key.
The windows displayed show which alarms are active.

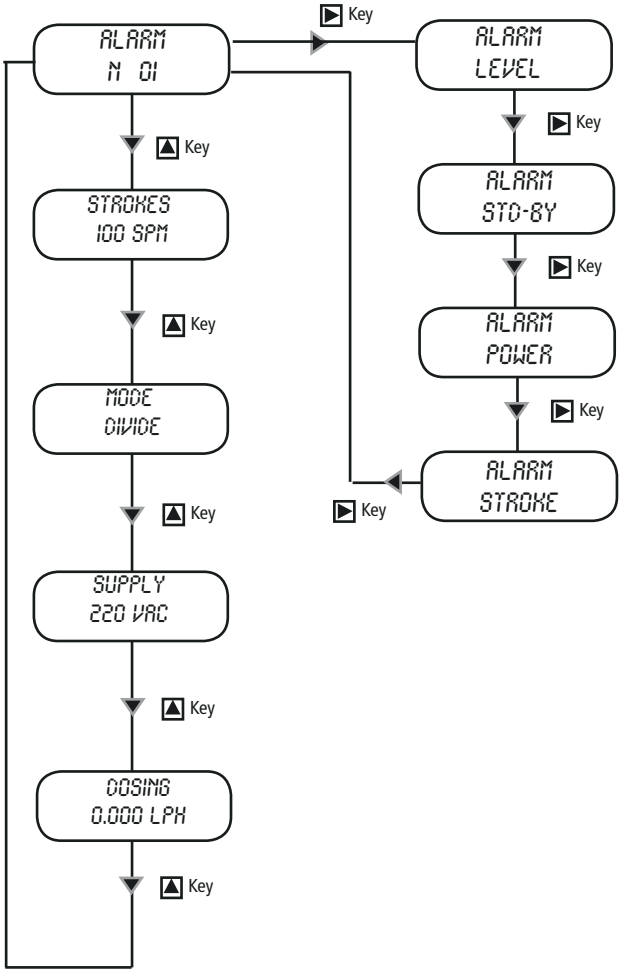

Level alarm: the level probe signals the product end.

Stand-by alarm signals the pump stop.

Power alarm signals the power supply is out of range (from 180 to 260 VAC).

Stroke alarm signals that it has been set a capacity higher than the value on the label.

This diagram shows all the possible alarms.

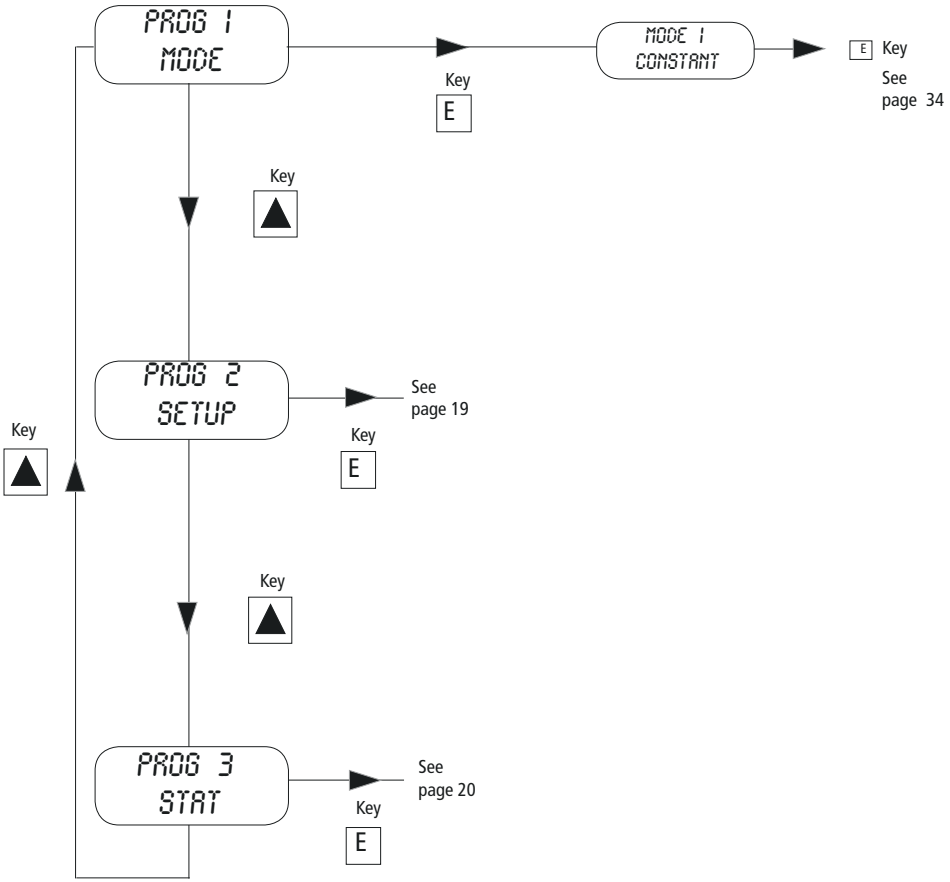
PROG 1
MODE
Key
E
MODE 1
CONSTANT
E Key
See
page 34
Key
PROG 2
SETUP
See
page 19
Key
E
Key
Key
PROG 3
STAT
See
page 20
Key
E

14. Quick Guide - Main Menu (Prog [2] Setup)

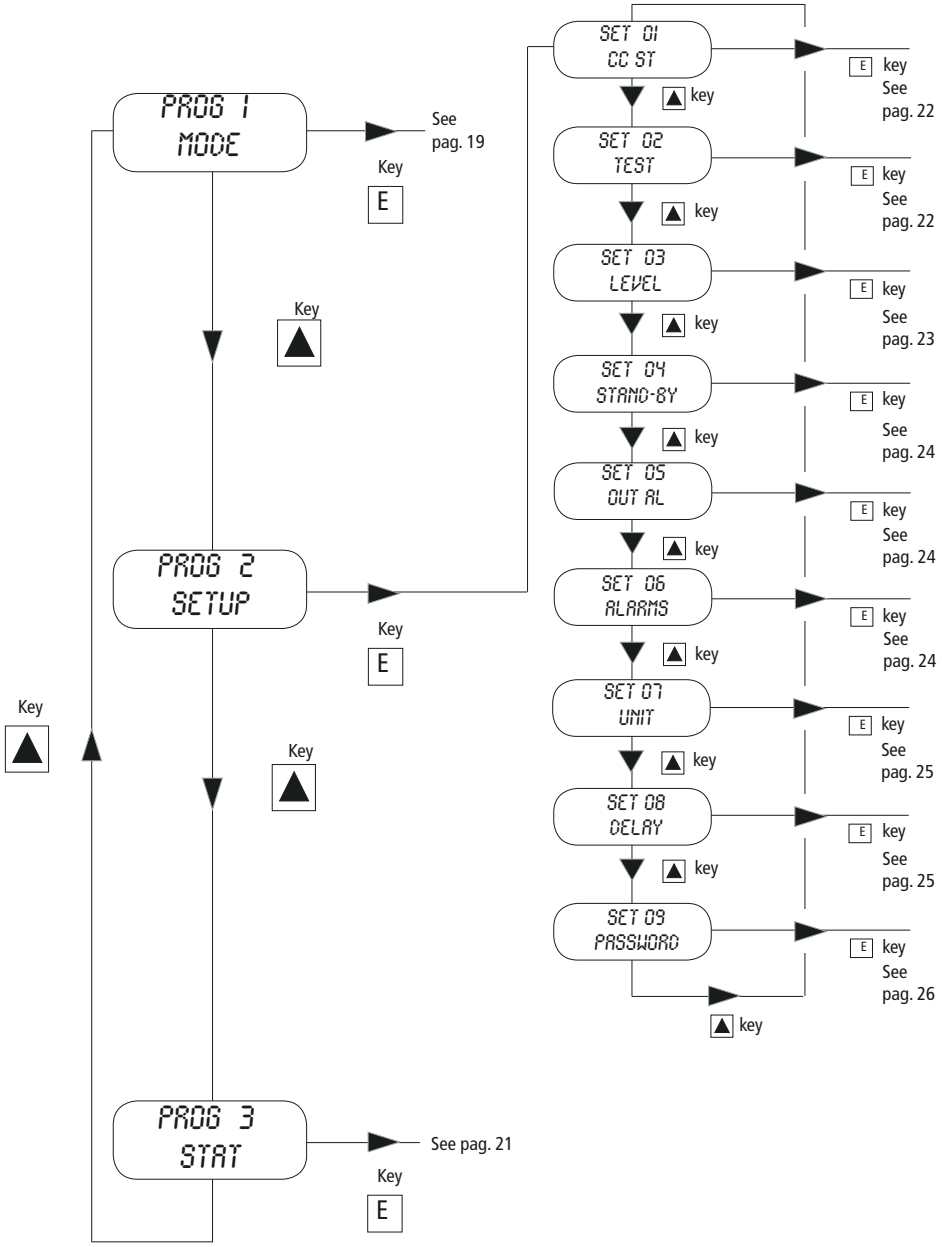

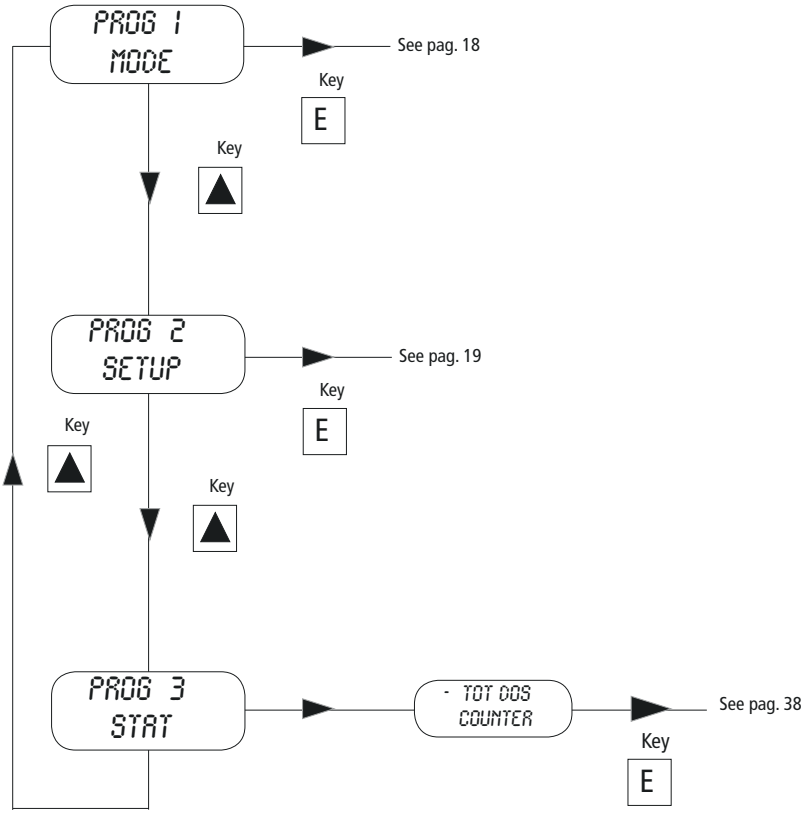
PROG 1
MODE
See pag. 18
Key
E
Key
PROG 2
SETUP
See pag. 19
Key
E
Key
Key
PROG 3
STAT
- TOT DOS
COUNTER
See pag. 38
Key
E

16. Setup

Apart of choosen working mode, the pump must be prepared to operate by setting the main parameters into "SETUP" menu. To enter into this menu please follow the "Quick Guide through menu" at page 20.

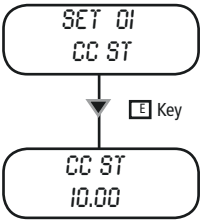

16.1 CC per Stroke.

Enter here the cc/stroke value obtained during "Test" mode (calibration).

Use "UP" key to increase of one unit the blinking digit "_".

Press "RIGHT" key to skip on next digit.

Press "E" key to save data and "ESC" exit to main menu.
Otherwise press "ESC" to discard data and exit to main menu.

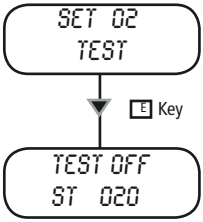

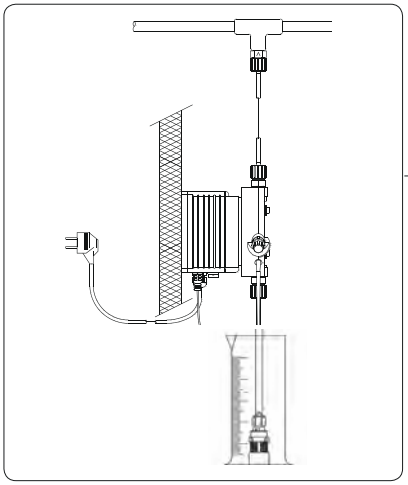

16.2 Calibration.

This procedure defines the cc quantity (cubical centimeters) that the pump feed every single injection. To determine this value the pump must be calibrated.

1) Install the pump on plant and insert the suction hose (with its level probe / foot filter) into a BEKER "test-tube".
If pump's model is self-priming put the discharge hose into the "test-tube" too.

2) Power up the pump and turn the flow's knob to required position.

3) Fill up the "test-tube" with the chemical until to reach a known value.

4) From setup menu choose "TEST", and insert 20". This value is the strokes that the pump will produce during the procedure.

6) Press "E". The pump will begin to produce the 20 strokes and to suck the chemical from the "test-tube".

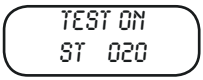

7) At the end of 20 strokes the pump will stop. Read the value of chemical left into "test-tube".

8) Substract the initial value to the left value.

9) Divide the result with the ST value (20).

10) Type this value into "CC/ST" (Set [01]) as previously described.

11) If obtained result is too small or too big, please, try to change strokes value (20).

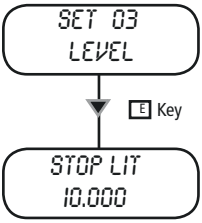

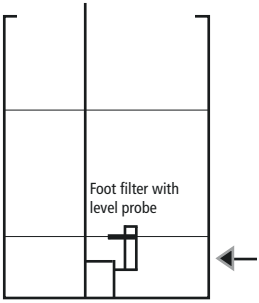

Customizable Reserver (liters / gallons)

16.3 Pre Level Alarm (Reserve).

This function defines a pre-alarm status to inform user that the dosing product is near to end. Reserve value to be set, must be calculated on product quantity left between foot filter and pump's suction level.

- Use "UP" key to increase the blinking "_" digit.
-Press "RIGHT" key to skip on next digit.
-Press "E" key to save data and "ESC" exit to main menu.

Otherwise press "ESC" to discard data and exit to main menu.

During the alarm the pump continues to dose but it'll show the following picture:

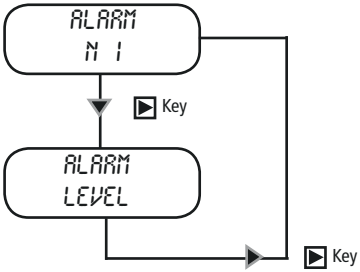

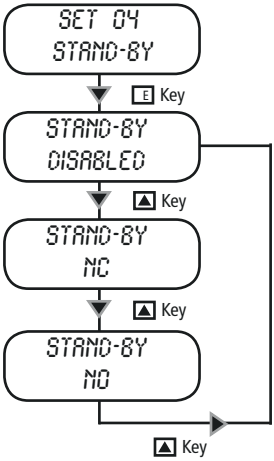

16.5 "Stand-By" signal.

This function allows the pump to dose only when an external signal is received from "Stand-by" input. This signal can be enabled as a N.O. contact (Normally Opened) , N.C. contact (Normally Closed) or disabled.

- Use "UP" key to change working mode for "Stand by" signal.

-Press "E" key to save data and "ESC" to exit to main menu. Otherwise press "ESC" to discard data and exit to main menu.

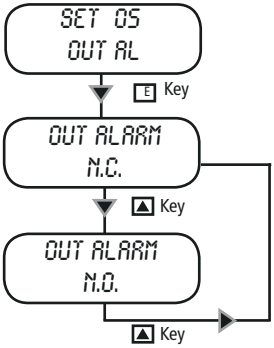

16.6 "Out Alarm" signal.

This function allows to manage the alarm output contact . The alarm can be set as "N.O." contact (Normally Open) or "N.C." contact (Normally Closed).

- Use "UP" key to change working mode for "Out Al" signal.

-Press "E" key to save data and exit to main menu. Otherwise press "ESC" to discard data and exit to main menu.

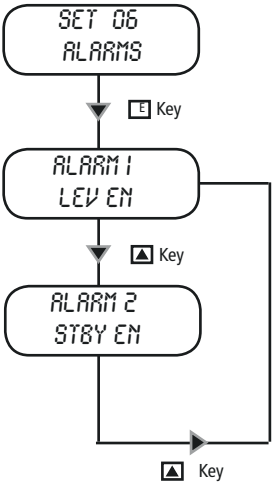

16.7 Alarms Management.

Use this function to enable/disable the relay output for level alarm (lev) and/or standby (stby) and/or flow sensor (sefl) and/or ppm and/or percentage (PERC) and/or MLQ and/or Batch.

If alarm is activated for one or more events then the output relay will be enabled, the pump will show the alarm status and it'll stop or not the dosing activity.

If alarm is not activated for one or more events then the output relay will be disabled, the pump will show the alarm status and it'll stop or not the dosing activity.

- Use "UP" key to choose the alarm to set.

-Use "RIGHT" key to enable (EN) or disable (DI) the alarm.

-Press "E" key to save data and "ESC" to exit to main menu. Otherwise press "ESC" to discard data and exit to main menu.

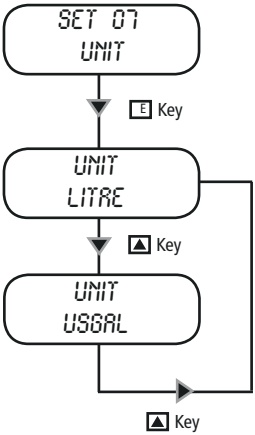

16.10 Unit Change.

This function allows to choose between liters or gallons measurement unit.

-Use "UP" key to switch between liter or gallons measurement unit.

-Press "E" key to save data and "ESC" to exit to main menu. Otherwise press "ESC" to discard data and exit to main menu.

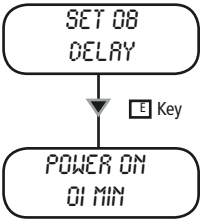

16.11 Startup Delay Setup.

When the pump is powered is it possible to have a delay time (from 0 to 10 minutes) before dosing activities.

-Use "UP" key to choose the alarm to set.

-Use "RIGHT" key for next digit.

-Press "E" key to save data and "ESC" to exit to main menu. Otherwise press "ESC" to discard data and exit to main menu.

Note: Press any key during delay time to skip it.

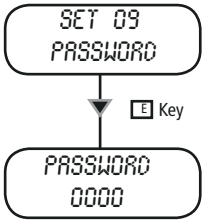

16.12 Password Setup.

"Setup" menu is password protected. Default value to enter into "setup" menu is "0000" (only numeric units). To change this password proceed as follows:

- Use "UP" key to change first digit.

-Press "RIGHT" key to move cursor over next digit.

-Press "E" key to save data and "ESC" to exit to main menu. Otherwise press "ESC" to discard data and exit to main menu.

Note: For lost password, please, follow the "Reset password" procedure.

17. "Load default" and "Reset Password" procedure

"LOAD DEFAULT" procedure

This procedure deletes all programming data set. It reloads the default data of the pump.

Follow this instructions:

- unplug power supply;

- pressing both "UP" and "RIGHT" keys, plug in power supply.

For few seconds, the display shows LOAD DEFAULT before start up the pump.

"RESET PASSWORD" procedure

This procedure resets the password set and reloads the default password of the pump ("0000").

Follow this instructions:

- unplug power supply;

- pressing both "UP" and "ESC" keys, plug in power supply.

For few seconds, the display shows RESET PASSWORD before start up the pump.

18. Working procedure setup

Introduction.

CONSTANT mode.

Pump doses at a constant rate set in "SPH" (strokes for hour), "SPM" (strokes for minute) or "LPH" (litres per hour) parameters set during program session.

When to use this mode ?
This mode is useful when there isn't an input signal to control the dosing activity. Pump doses requested product quantity in constantly.

Which parameters must be set ?
SPH (strokes per hour), SPM (strokes per minute) LPH (litres per hour)

19. "CONSTANT" working mode

Pump doses at a constant rate set in"SPH" (strokes for hour), "SPM" (strokes for minute), "LPH" (litres per hour) parameters set during program session.

Which parameters must be set ?
SPH (strokes per hour), SPM (strokes per minute), LPH (litres per hour).

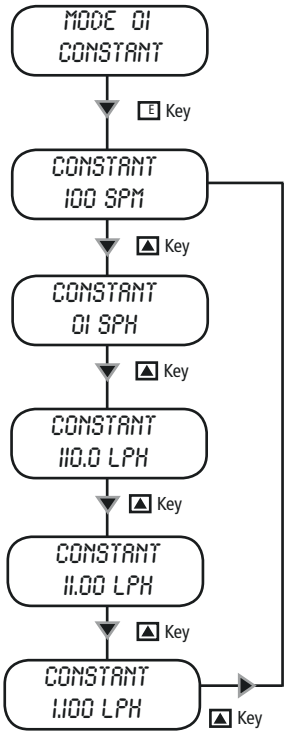

Choose "CONSTANT" working mode: "SPH" (strokes per hour), "SPM" (strokes per minute), "LPH" (litres per hour).

Use "UP" key to choose between these two modes. Use "RIGHT" key to change value. For next digit press again "RIGHT" key.

"LPH" value accuracy depends on cc/st value set into the Setup menu (SET [01] CC/ST).
LPH max value depends on the max frequency of the pump (refer to the pump's label). If an higher value is set, the pump will show an alarm message (ALARM STROKE).

Press "E" key to save data and "ESC" to exit to main menu. Otherwise press "ESC" to discard data and exit to main menu.

Note: last mode displayed before press the "E" key will be the active one.

To see dosing statistics choose "STAT" from main menu. See quick guide at pag. 21

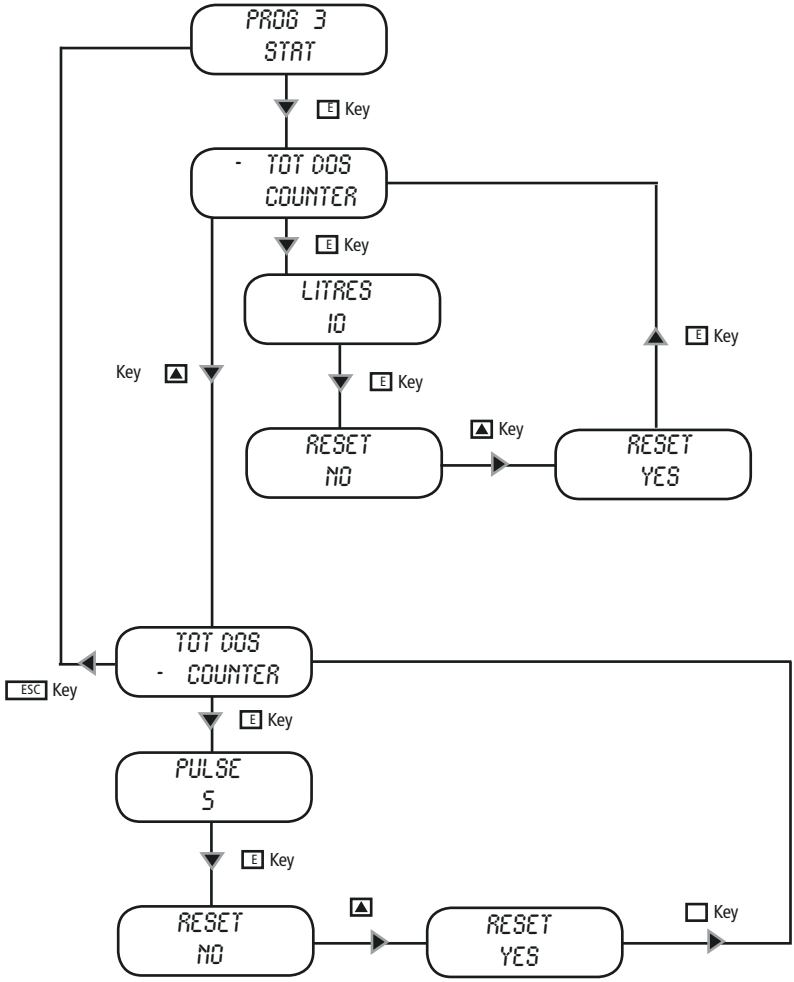

"TOT DOS" means total dosed product since pump last reset.
"COUNTER" means strokes numbers since pump last reset.

21. Troubleshooting

Problem	Possible Cause
Pump doesn't turn on.	Pump isn't powered. Connect it to main supply. Pump's protection fuse is broken. Replace it. See page 45 for replacement procedure. Pump's main board is broken. Replace it. See page 45 for replacement procedure.
Pump is not dosing and solenoid is operating.	The foot filter is obstructed. Clean it. Suction hose is empty. Pump must be primed. Repeat priming procedure. Air bubbles inside hydraulic circuit. Check valves - hoses - fittings. Product to dose is generating gas. Turn discharge knob and let air flow away. Use a self-venting pump head.
Pump is not dosing and solenoid isn't operating or slightly operating.	Crystals presence inside valves. Check them and try to dose 2-3 liters of normal water. Change valves. Injection valve obstructed. Change it.
Pump's display shows "ERROR MEM" o "ERROR DATA"	ERROR MEM: error in data storage. it is necessary to reload pump's default data, as described in "Load default procedure" on page 28. ERROR DATA: error in data setting. Check the values set. If they are correct, but the message still appears, the pump is underdimensioned.

22. Fuse and main board replacement

Fuse or main board replacement is allowed to qualified personnel only. Before to operate disconnect the pump from main power and all hydraulic connections.

For fuse replacement is necessary to use a 3x16 and 3x15 screwdriver and a new fuse (same model of old one).

For main board replacement is necessary to use a 3x16 and 3x15 screwdriver and a new main board (same model of old one).

Fuse replacement procedure:

- Remove 8 screws from pump's back.
- Pull pump's back cover until it's completed separated from pump's front.
- Locate the blown fuse and replace it.
- Reassemble the pump.
- Reinsert screws.

Main board replacement procedure:

- Remove 8 screws from pump's back.
- Pull pump's back cover until it's completed separated from pump's front.
- Remove board's screws.
- Completely disconnect wires from main board and replace it. Reinsert screws.
- Reconnect wires to the main board (see enclosed picture).
- Reassemble the pump.
- Reinsert screws.

23. Main Board

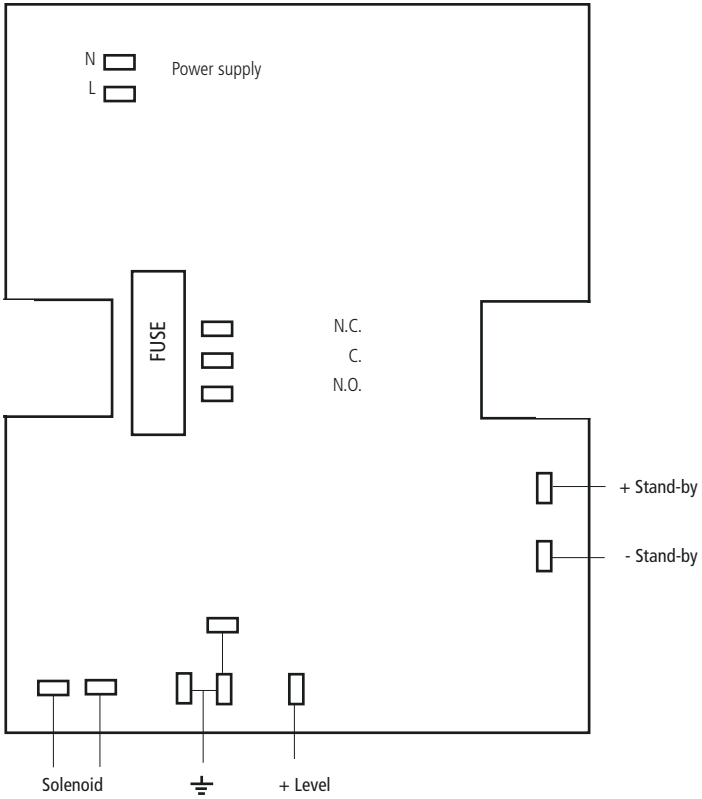

A Appendix. Maintenance.

During normal operating mode, pump must be checked once for month. Wear needed safety devices and check hoses and all hydraulic components for:

- product leak
- broken hoses
- corroded connections

All maintenance operations must be performed by authorized and trained personnel only. If pump needs factory assistance please use original package to return it.

Before to do it, please, remove all dosing product inside the pump and hoses.

Use only original spare parts!

Recommended Chemicals Table		
Chemical Product	*Formula*	*Maximum % Concentration*
Hydrochloric Acid	HCl	33%
Sulphuric Acid	H_2SO_4	96%
Sodium Bisulphate	$NaHSO_4$	37%
Sodium Chlorite	$Na\ ClO_2$	30%
Sodium Hypochlorite	$Na\ OCl$	13,5%
Calcium Hypochlorite	$Ca\ (ClO)_2$	2%
Dichloroisocyanuric Sodium	$(CON)_3\ Cl\ Na$	4%
Alluminium Sulphate	$Al_2\ (SO_4)_3$	18%
Ferric Chloride	$Fe\ Cl_2$	40%

TECHNICAL FEATURES

Power supply:	230 VAC (180-270 VAC)
Power supply:	115 VAC (90-135 VAC)
Power supply:	24 VAC (20-32 VAC)
Power supply:	12 VDC (10-16 VDC)
Pump Strokes:	0 ÷ 120
Suction Height:	1,5 metres (5 ft)
Environment Temperature:	0 ÷ 45°C (32 ÷ 113°F)
Chemical Temperature:	0 ÷ 50°C (32 ÷ 122°F)
Installation Class:	II
Pollution Level:	2
Audible Noise:	74dbA
Packaging and Transporting Temperature:	-10÷+50°C (14 ÷ 122°F)
Protection degree:	IP65

MANUFACTURING MATERIALS

Case:	PP
Pump head:	PVDF (standard), PP, PMMA, SS *
Diaphragm:	PTFE
Balls:	CERAMIC, GLASS, PTFE, SS *
Suction Pipe	PVC/PE **
Delivery Pipe:	PVDF
O-ring:	FP, EP, WAX, SI, PTFE *
Level Probe:	PVDF
Level probe cable:	PE
Foot Filter:	PVDF

*as ordered.
** according with pump's model.

INFORMATION												
TMS	**FLOW**				**cc per stroke**	**Max pressure**		**Ampere peak (A)**		**PVDF delivery hose**	**Suction hose**	**Pump head**
	min cc/h	max l/h	Min GPH	Max GPH	**Max**	**bar**	**PSI**	230 VAC	115 VAC			
2005	0,7	5	0,0001	1,32	0,7	20	290	1,6	3,2	4 x 6	4 x 6	L
0515	2,1	15	0,0005	3,96	2,1	5	73	1,6	3,2	6 x 8	6 x 8	N
0420	2,8	20	0,00074	5,28	2,8	4	58	1,6	3,2	6 x 8	6 x 8	N
0330	4,2	30	0,0011	7,93	4,2	3	43	1,6	3,2	8 x 10	8 x 12	S
0150	7	50	0,0018	13,2	7	1	15	1,6	3,2	8 x 10	8 x 12	S
00100	14	100	0,0037	26,4	14	0	0	1,6	3,2	12 x 18 PVC renforced	12 x 18 PVC renforced	T
TMSA	**FLOW**				**cc per stroke**	**Max pressure**		**Ampere peak (A)**		**PVDF delivery hose**	**Suction hose**	**Pump head**
	min cc/h	max l/h	Min GPH	Max GPH	**Max**	**bar**	**PSI**	230 VAC	115 VAC			
203,2	0,44	3,2	0,0001	0,85	0,44	20	290	1,6	3,2	4 x 6	4 x 6	LA
0510	1,39	10	0,0004	2,64	1,39	5	73	1,6	3,2	6 x 8	6 x 8	NA
0413	1,80	13	0,0005	3,43	1,80	4	58	1,6	3,2	6 x 8	6 x 8	NA

Pump head mod. L

20 05

l/h 05

bar 20

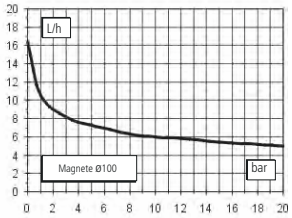

Pump head mod. L

05 15

l/h 15

bar 05

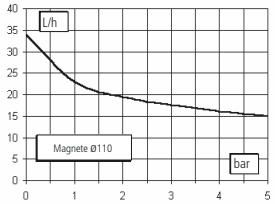

Pump head mod. N

04 20

l/h 20

bar 04

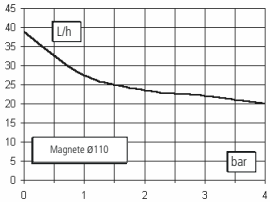

Pump head mod. S

03 30

l/h 30

bar 03

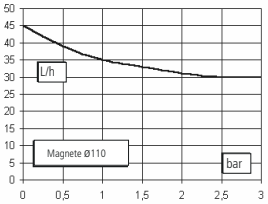

Pump head mod. S

01 50

l/h 50

bar 01

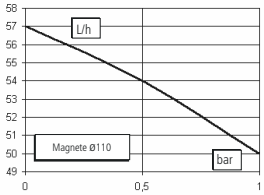

Pump head mod. T

00 100

l/h 100

bar 0

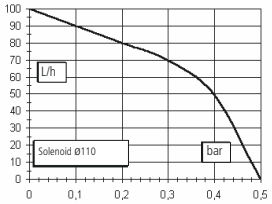

Flow rate indicated is for H_2O at 20°C at the rated pressure.
Dosing accuracy ± 2% at constant pressure ± 0,5 bar.

Pump head mod. LA

20 3,2

l/h 3,2

bar 20

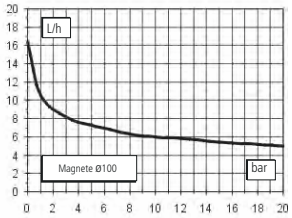

Pump head mod. LA

05 10

l/h 10

bar 05

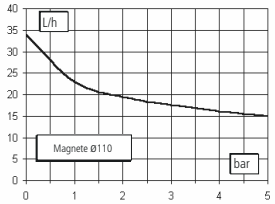

Pump head mod. NA

04 13

l/h 13

bar 04

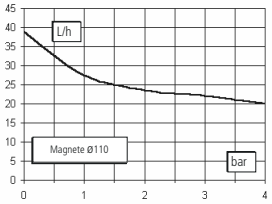

Flow rate indicated is for H_2O at 20°C at the rated pressure.
Dosing accuracy ± 2% at constant pressure ± 0,5 bar.

Unit value: mm

PUMP HEAD "S" - "T"

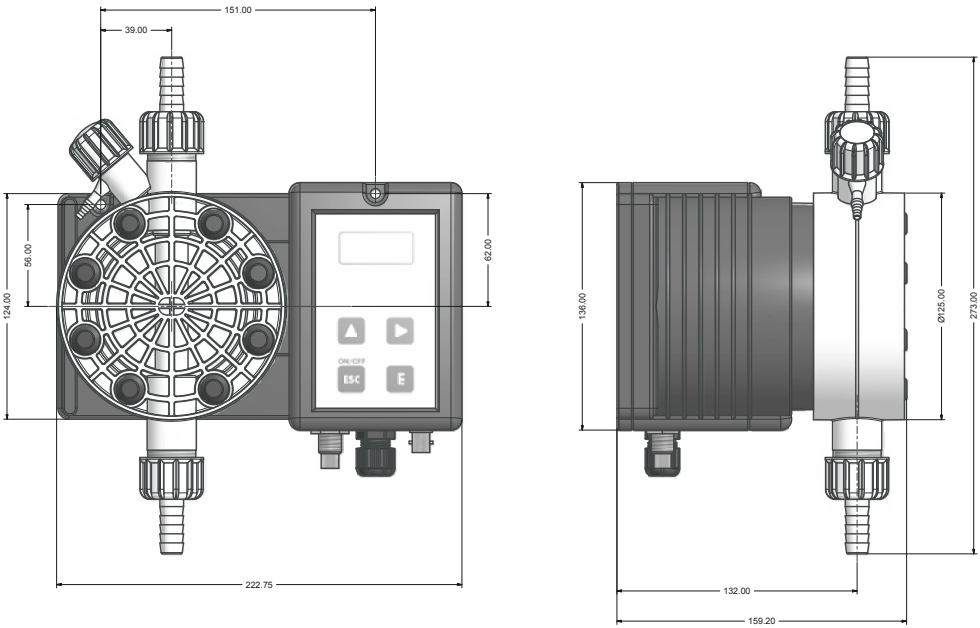

PUMP HEAD "N" - "P"

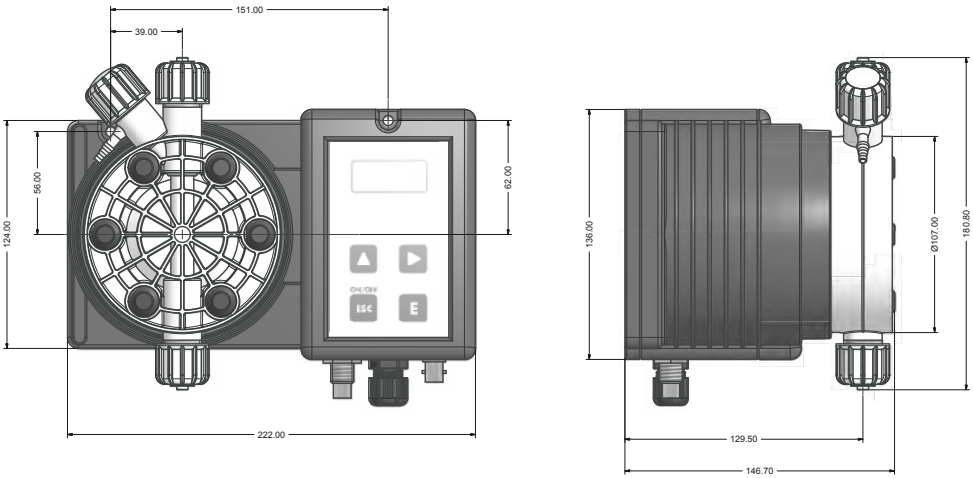

E Appendix. Chemical Compatibility Table

Solenoid driven metering pumps are widely used to dose chemical fluids and it is important that the most suitable material in contact with fluid is selected for each application. This compatibility table serves as a useful help in this respect. All the informations in this list are verified periodically and believed to be correct on the date of issuance. All the informations in this list are based on manufacturer's data and its own experience but since the resistance of any material depends by several factors this list is supplied only as an initial guide, in no way manufacturer makes warranties of any matter respect to the informations provided in this list.

Product	Formula	Ceram.	PVDF	PP	PVC	SS 316	PMMA	Hastel.	PTFE	FPM	EPDM	NBR	PE
Acetic Acid, Max 75%	CH3COOH	2	1	1	1	1	3	1	1	3	1	3	1
Hydrochloric Acid, Concentrate	HCl	1	1	1	1	3	1	1	1	1	3	3	1
Hydrofluoric Acid 40%	H2F2	3	1	3	2	3	3	2	1	1	3	3	1
Phosphoric Acid, 50%	H3PO4	1	1	1	1	2	1	1	1	1	1	3	1
Nitric Acid, 65%	HNO3	1	1	2	3	2	3	1	1	1	3	3	2
Sulphuric Acid, 85%	H2SO4	1	1	1	1	2	3	1	1	1	3	3	1
Sulphuric Acid, 98.5%	H2SO4	1	1	3	3	3	3	1	1	1	3	3	3
Amines	R-NH2	1	2	1	3	1	-	1	1	3	3	1	1
Sodium Bisulphite	NaHSO3	1	1	1	1	2	1	1	1	1	1	1	1
Sodium Carbonate (Soda)	Na2CO3	2	1	1	1	1	1	1	1	2	1	1	1
Ferric Chloride	FeCl3	1	1	1	1	3	1	1	1	1	1	1	1
Calcium Hydroxide (Slaked Lime)	Ca(OH)2	1	1	1	1	1	1	1	1	1	1	1	1
Sodium Hydroxide (Caustic Soda)	NaOH	2	1	1	1	1	1	1	1	2	1	2	1
Calcium Hypochlor.(Chlor.ted Lime)	Ca(OCl)2	1	1	1	1	3	1	1	1	1	1	3	1
Sodium Hypochlorite, 12.5%	NaOCl + NaCl	1	1	2	1	3	1	1	1	1	1	2	2
Potassium Permanganate, 10%	KMnO4	1	1	1	1	1	1	1	1	1	1	3	1
Hydrogen Peroxide, 30% (Perydrol)	H2O2	1	1	1	1	1	3	1	1	1	3	3	1
Aluminium Sulphate	Al2(SO4)3	1	1	1	1	1	1	1	1	1	1	1	1
Copper-II-Sulphate (Roman Vitriol)	CuSO4	1	1	1	1	1	1	1	1	1	1	1	1

Resistance rating

Resistant	1
Fairly resistant	2
Not resistant	3

MATERIALS

Polyvinyldene fluoride	PVDF	Pump Heads, valves, fitting, tubing
Polypropylene	PP	Pump Heads, valves, fitting, level floater
PVC	PVC	Pump Heads
Stainless steel	SS 316	Pump Heads, valves
Polymethyl Metacr.(Acrylic)	PMMA	Pump Heads
Hastelloy	C-276	Injection valve spring
Polytetrafluoroethylene	PTFE	Diaphragm
Fluorocarbon (Viton® B)	FPM	Sealings
Ethylene propylene	EPDM	Sealings
Nitrile	NBR	Sealings
Polyethylene	PE	Tubing

F Appendix. Hoses resistance table

Hose features are very important for a reliable dosage. Every pump's model is made to work in the best way using selected hoses according to pump's capacity / model. Information reported here are intended for standard use only. For extended information ask to hose's manufacturer.

Suction / Delivery Hose			
4x6 mm PVC (transparent)	4x8 mm PE (opaque)	6x8 mm PE (opaque)	8x12 mm PVC (transparent)

Delivery Hose	Working Pressure				Breaking Pressure			
4x6 mm PE 230 (opaque)	20°C 12 bar	30°C 10.5 bar	40°C 8.5 bar	50°C 6.2 bar	20°C 36 bar	30°C 31.5 bar	40°C 25.5 bar	50°C 18.5 bar
4x8 mm PE 230 (opaque)	20°C 19 bar	30°C 15.7 bar	40°C 12 bar	50°C 7.5 bar	20°C 57 bar	30°C 47 bar	40°C 36 bar	50°C 22.5 bar
6x8 mm PE 230 (opaque)	20°C 8.6 bar	30°C 6.8 bar	40°C 4.8 bar	50°C 2.3 bar	20°C 26 bar	30°C 20.5 bar	40°C 14.5 bar	50°C 7 bar
8x12 mm PE 230 (opaque)	20°C 12 bar	30°C 10.5 bar	40°C 8.5 bar	50°C 6.2 bar	20°C 36 bar	30°C 31.5 bar	40°C 25.5 bar	50°C 18.5 bar

4x6 mm PVDF Flex 2800 (opaque)	20°C 40 bar	30°C 34 bar	40°C 30 bar	50°C 27 bar	60°C 24.8 bar	80°C 20 bar	90°C 10 bar
6x8 mm PVDF Flex 2800 (opaque)	20°C 29 bar	30°C 25.5 bar	40°C 22 bar	50°C 20 bar	60°C 18 bar	80°C 14.5 bar	90°C 7.3 bar
8X10 mm PVDF Flex 2800 (opaque)	20°C 18 bar	30°C 15.5 bar	40°C 13.5 bar	50°C 12.5 bar	60°C 11.2 bar	80°C 9 bar	90°C 4.5 bar

¼ PE 230 (opaque)	20°C 17.6 bar
⅜ PE 230 (opaque)	20°C 10.6 bar
½ PE 230 (opaque)	20°C 10.6 bar

H Appendix. Summary

1. Introduction 3
2. Unpacking..... 4
3. Pump's description 5
4. Before to Install warnings 6
5. Installation draw 7
6. Hydraulic installation 8
7. Self-Venting pump head installation..... 11
8. Electrical Installation..... 12
9. Basic settings 14
10. Priming 16
11. Pump's functions summary 17
12. Pump's functions summary- ALARMS 18
13. Quick Guide - Main Menu (Prog [1] Mode)..... 19
14. Quick Guide - Main Menu (Prog [2] Setup)..... 20
15. Quick Guide - Main Menu (Prog [3] Stat) 21
16. Setup 22
17. "Load default" and "Reset Password" procedure 28
18. Working procedure setup..... 29
19. "CONSTANT" working mode 30
20. STATISTICS management 31
21. Troubleshooting..... 32
22. Fuse and main board replacement 33
23. Main Board 34
A Appendix. Maintenance..... 35
B Appendix. Construction Materials and Technical info 36
C Appendix. Delivery Curves 37
C Appendix. Self-Venting delivery curves 38
D Appendix. Dimensions 39
E Appendix. Chemical Compatibility Table 40
F Appendix. Hoses resistance table 41
H Appendix. Summary 43

PRECAUTIONS RELATING TO DIRECTIVES, REGULATIONS AND STANDARDS

§ CE/EU and UKCA marking

We guarantees that this product meets the essential requirements of the applicable Directives and Regulations based on the following specifications. Please carefully consider the following specifications for use of the product in European Union member countries and the United Kingdom.

• CE/EU harmonized directives and standards

Directives
DIRECTIVE 2006/42/EC
DIRECTIVE 2014/35/EU
DIRECTIVE 2014/30/EU
DIRECTIVE 2011/65/EU
DELEGATED DIRECTIVE (EU) 2015/863

Harmonized standards
EN ISO 12100
EN 809
EN ISO 20361
EN IEC 61326-1
EN 61010-1
EN IEC 63000

• UKCA harmonized regulations and standards

Regulations
2008 No. 1597
2008 2016 No. 1091
2016 No. 1101
2012 No. 3032

Harmonized standards
BS EN ISO 12100
BS EN 809
BS EN ISO 20361
BS EN IEC 61326-1
BS EN 61010-1
BS EN IEC 63000

Disposal of end-of-life equipment by users

This symbol warns you not to dispose of the product with normal waste. Respect human health and the environment by giving the discarded equipment to a designated collection center for the recycling of electronic and electrical equipment. For more information visit the online site.

When dismantling a pump please separate material types and send them according to local recycling disposal requirements. We appreciate your efforts in supporting your local Recycle Environmental Program. Working together we'll form an active union to assure the world's invaluable resources are conserved.