"MTOWER CD/PH/CL plus"
CONTROL INSTRUMENT

Data Sheet

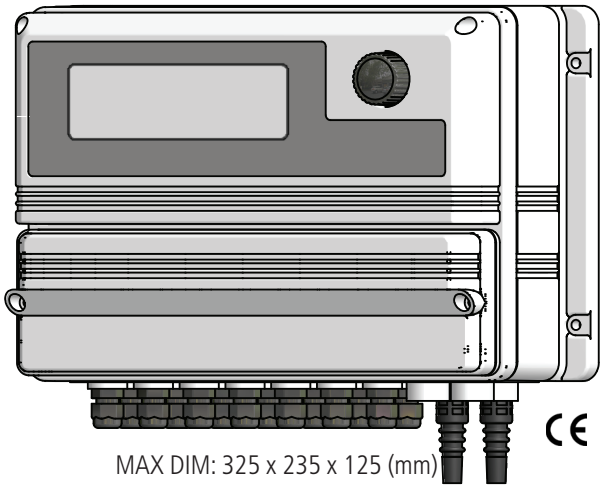

MAX DIM: 325 x 235 x 125 (mm)

The "MTOWER PLUS" is a fully featured 3 channels cooling towers controller with two-way biocide options and inhibitor / bleed control.

Cooling towers are heat removal devices used to transfer process waste heat to the atmosphere. Cooling towers may either use the evaporation of water to remove process heat and cool the working fluid to near the wet-bulb air temperature or rely solely on air to cool the working fluid to near the dry-bulb air temperature.

Common applications include cooling the circulating water used in oil refineries, chemical plants, power plants and building cooling.

All information are provided through a large backlit LCD display (240x64). Using a revolutionary wheel control the instrument can be easily programmed. "MTOWER PLUS" is housed into an IP65 plastic box.

FEATURES

- 3 Channels for Conductivity, Chlorine and pH
- Large LCD backlight graphic display
- Wheel control with easy setup interface
- Bleed and Feeders live display
- Universal power supply
- Permanent data storage

Available with remote control (network or GPRS modem)

- Multiple alarms control :
  - Hi & Low conductivity - pH - Cl
  - Bleed timeout
  - Chemicals level
  - Flow

INPUTS

- Conductivity probe
- Temperature probe (compensated)
- Flow meter makeup
- Flow meter bleed
- 1 Biocide level
- 2 Biocide activator levels
- Inhibitor level
- Flow sensor
- Chlorine probe
- Chlorine level
- pH probe
- pH level

OUTPUTS

- Bleed
- Inhibitor
- 1 Biocides
- 2 Biocides activators
- Alarm
- 0/20 or 4/20 mA Conductivity / Temp / pH / Cl
- 1 Chlorine proportional
- 1 Chlorine digital
- 1 pH proportional
- 1 pH digital
- Serial Port
- Inhibitor proportional

Via Donatori di Sangue, 1 - 02100 Rieti (Italy)
+39 074622841 | emecpumps.com

Specifications subject to change without notice | R2025

emec SIMPLE AS WATER

IQNET CERTIFIED MANAGEMENT SYSTEM
qualityaustria SYSTEM CERTIFIED
ISO 9001:2015 No.07728/0
ISO 14001:2015 No.00997/0
ISO 45001:2018 No.01121/0

"MTOWER CD/PH/CL plus" CONTROL INSTRUMENT

Data Sheet

ELECTRICAL

SIGNAL INPUT
Terminal block

POWER SUPPLY
UNIVERSAL 90÷265 VAC; 50/60 Hz

POWER CONSUMPTION
Average 20 W (standard configuration)
Average 30 W (modem configuration)

THE WHEEL CONTROLLING SYSTEM

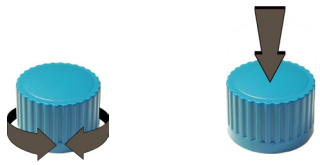

MAIN SCREEN

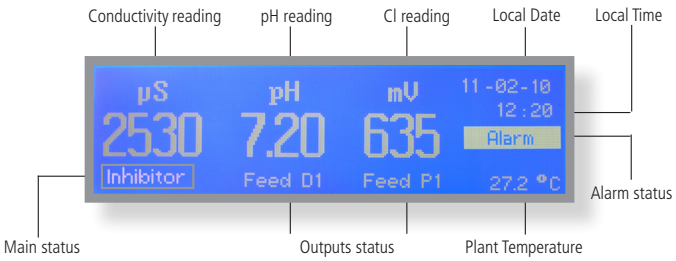

CONTROL PARAMETERS

Conductivity - pH - Cl
Timer (1 - 2 - 4 Weeks)

Inhibitor:
- Feed and Bleed
- Feed as a percentage of bleed
- Feed as a percentage of time
- Driven by pulse sender water meter
- PPM setup with water meter

ENCLOSURE

IP65 enclosure (NEMA4x)
MTOWER control instruments are manufactured in ABS housing to ensure protection against aggressive chemicals and tough environment.

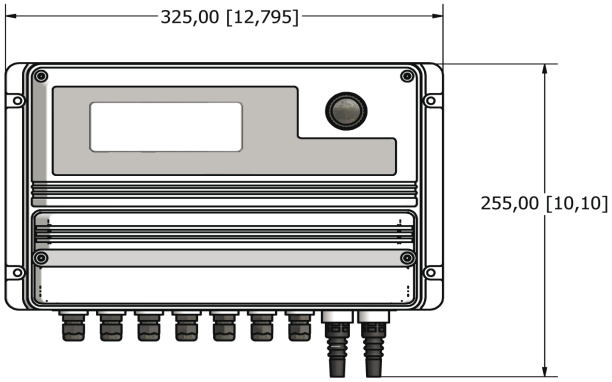

ENVIRONMENT

-10°C ÷ 50°C (14°F ÷ 122°F)
0÷95% (non condensing) relative humidity

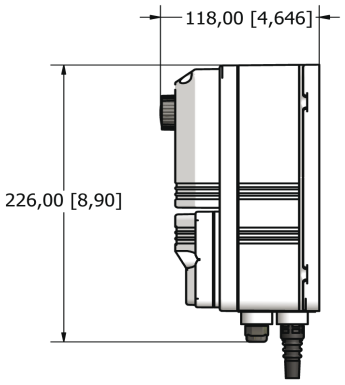

mm[inches]

Via Donatori di Sangue, 1 - 02100 Rieti (Italy)
+39 074622841 | emecpumps.com

Specifications subject to change without notice | R2025

emec SIMPLE AS WATER

IQNET CERTIFIED MANAGEMENT SYSTEM
qualityaustria SYSTEM CERTIFIED
ISO 9001:2015 No.07728/0
ISO 14001:2015 No.00997/0
ISO 45001:2018 No.01121/0