CONDUCTIVITY PROBES
FULL SS (AISI-316) (R 3/4")

Data Sheet

FULL STAINLESS STEEL CONDUCTIVITY PROBES

Conductivity probes with full SS body.
They perform an accurate and reliable operativity into chemical environment.
These electrodes are made for an easy maintenance, accurate reading and fast response.

Suitable to work under heavy pressure and high temperature.

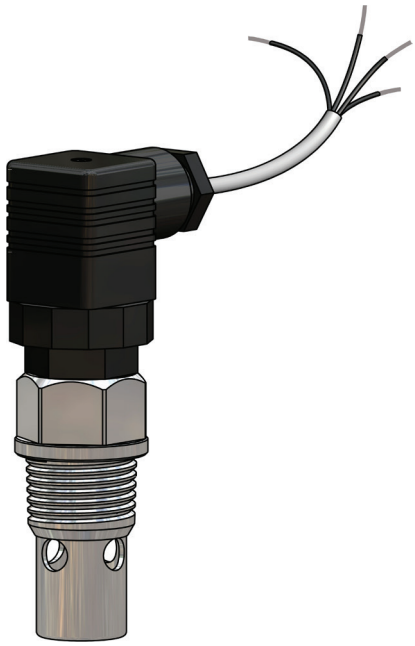

EICDC/K1 - K01 - K001
EICDCPT/K1 - K01 - K001

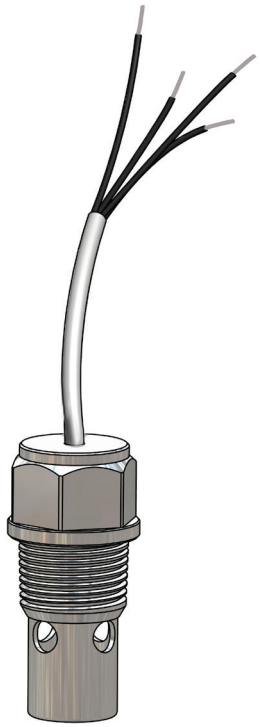

EICDHPT/K1 -K01 - K001

MODELS

	EICDC/1	EICDC/01	EICDC/001	EICDCPT/1	EICDCPT/01	EICDCPT/001	EICDHPT/1	EICDHPT/01	EICDHPT/001
Working Range	0-20mS	0-200 µS	0-20 µS	0-20mS	0-200 µS	0-20 µS	0-20mS	0-200 µS	0-20 µS
"K" Factor	1	0.1	0.01	1	0.1	0.01	1	0.1	0.01
Max pressure / temperature	15 bar/ 130°C	15 bar/ 130°C	15 bar/ 130°C	15 bar/ 130°C	15 bar/ 130°C	15 bar/ 130°C	15 bar/ 200°C	15 bar/ 200°C	15 bar/ 200°C
Body	SS	SS	SS	SS	SS	SS	SS	SS	SS
Electrodes	SS	SS	SS	SS	SS	SS	SS	SS	SS
Diameter	R 3/4"	R 3/4"	R 3/4"	R 3/4"	R 3/4"	R 3/4"	R 3/4"	R 3/4"	R 3/4"
Cable Length	4 m	4 m	4 m	4 m	4 m	4 m	4 m	4 m	4 m
Temperature Compensator	NTC 10K	NTC 10K	NTC 10K	PT 100	PT 100	PT 100	PT 100	PT 100	PT 100

Via Donatori di Sangue, 1 - 02100 Rieti (Italy)
+39 074622841 | emecpumps.com

Specifications subject to change without notice | R2025

emec SIMPLE AS WATER

IQNET CERTIFIED MANAGEMENT SYSTEM
qualityaustria SYSTEM CERTIFIED
ISO 9001:2015 No.07728/0
ISO 14001:2015 No.00997/0
ISO 45001:2018 No.01121/0

CONDUCTIVITY PROBES
FULL SS (AISI-316) (R 3/4")

Data Sheet

mod.EICDC/xx

4.0 mt long cable

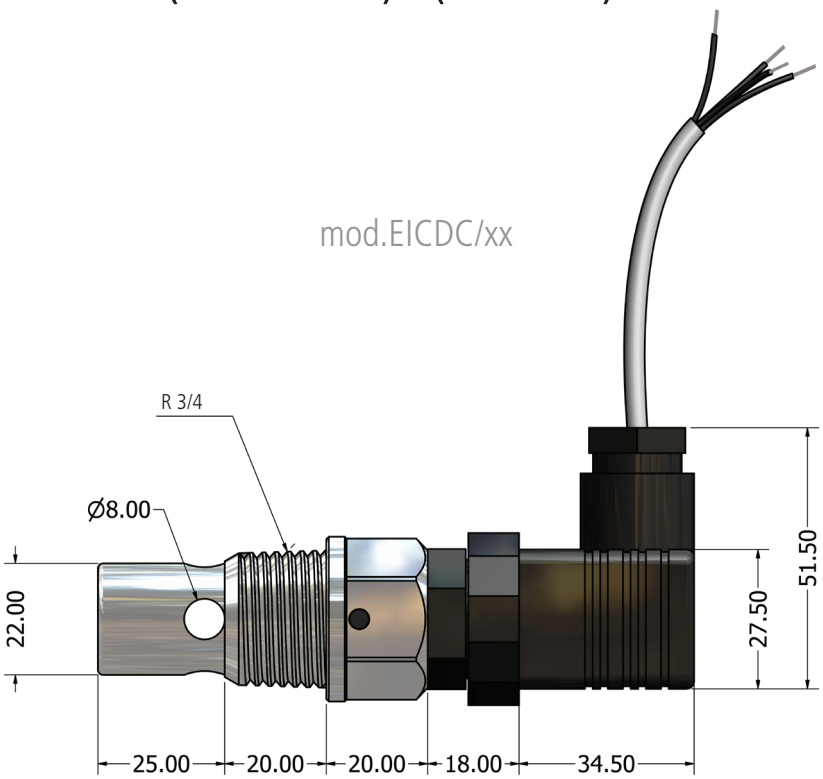

mod. EICDHPT/xx

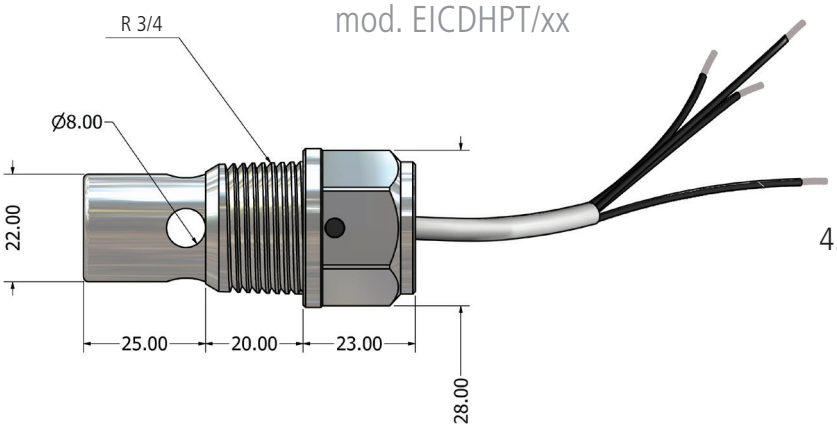

4.0 mt long cable

COMPENSATOR	CABLES		SECTION
NTC 10K	RED	ELECTRODES	4 x 0.14
	BLACK		
	WHITE	NTC 10K	
	GREEN		
	BLUE	SHIELD	

PT 100	RED	ELECTRODES	4 x 0.22
	BLACK		
	JELLOW - WHITE - GREEN - BROWN	PT 100	
	BLUE	SHIELD	

Via Donatori di Sangue, 1 - 02100 Rieti (Italy)
+39 074622841 | emecpumps.com

Specifications subject to change without notice | R2025

emec SIMPLE AS WATER

IQNET CERTIFIED MANAGEMENT SYSTEM

qualityaustria SYSTEM CERTIFIED
ISO 9001:2015 No.07728/0
ISO 14001:2015 No.00997/0
ISO 45001:2018 No.01121/0