R990525

ECDI - ECDC - ECDIM - ECDCIM - EICD - EICDC - ECDHL

ECDI series

ECDC series

ECDIM series

ECDCIM series

EICDHPT series

EICDC series

ECDHL series

EN

OPERATING MANUAL

CONDUCTIVITY PROBES

R3-11-21

This operating instructions contains safety information that if ignored can endanger life or result in serious injury.

Read these instructions **carefully** before use and keep them for future reference.

Information and specifications on this manual could be uncorrect or could have printing errors. Specifications are subject to change without notice.

GENERAL SAFETY GUIDELINES

Operating, installing, or maintaining the unit in any way that is not covered in this manual could cause death, serious personal injury, or damage to the equipment.

SIMBOLI

This manual use the following safety message icon:

Danger!
Indicates a hazardous situation which, if not avoided, will result in death or serious injury.

Warning!
Indicates a hazardous situation which, if not avoided, could result in death or serious injury.

Importante! - Indica una situazione potenzialmente pericolosa che, se non viene evitata, può determinare un risultato o uno stato indesiderato. Una pratica non correlata a lesioni personali.

Riferimento incrociato - Questo simbolo indica un riferimento verso una pagina specifica o un paragrafo del manuale.

PURPOSE OF USE AND SAFETY

EQUIPMENT INTENDED FOR THE MEASUREMENT OF CONDUCTIVITY IN WATER.

Do not use in explosive area (EX).
Do not use with flammable chemicals.
Do not use with radioactive chemicals.

Use the probe in accordance with the data and specifications printed on the label.

Do not modify or use in a manner inconsistent with the provisions of the operating manual.

⚠ **When using this product with aggressive chemicals observe the regulations concerning the transport and storage of aggressive fluids.**

⚠ **When installing always observe national regulations.**

⚠ **Manufacturer is not liable for any unauthorized use or misuse of this product that may cause injury, damage to persons or materials.**

⚠ **Probes must be serviced and repaired by qualified and authorized personnel only.**

⚠ **Before any operation:**
- **always read chemical Material Safety Data Sheet (MSDS);**
- **always wear protective clothing;**
- **empty and rinse the liquid end before work on a the product which has been used with hazardous or unknown chemicals.**

⚠ **Avoid grinding / shock / falls / friction.**

Environmental safety

Work area
Always keep the area clean to avoid and/or discover emissions.

Recycling guidelines
Always recycle according to these guidelines:
1. If the unit or parts are accepted by an authorized recycling company, then follow local recycling laws and regulations.
2. If the unit or parts are not accepted by an authorized recycling company, then return them to the nearest representative.

Waste and emissions regulations
Observe these safety regulations regarding waste and emissions:
- Dispose appropriately of all waste.
- Handle and dispose of the dosed chemical in compliance with applicable environmental regulations.
- Clean up all spills in accordance with safety and environmental procedures.
- Report all environmental emissions to the appropriate authorities.

LABEL

Examples of labels.

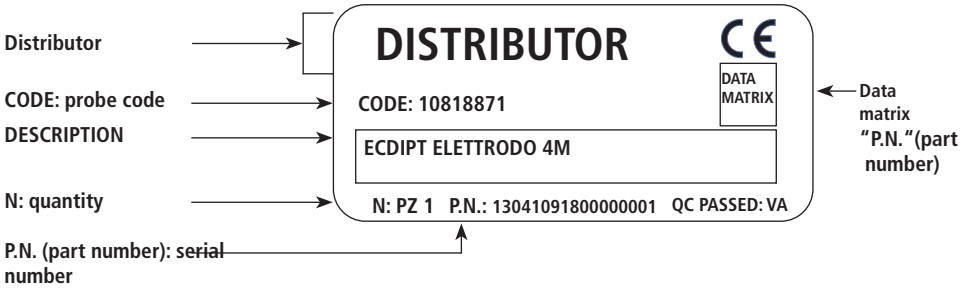

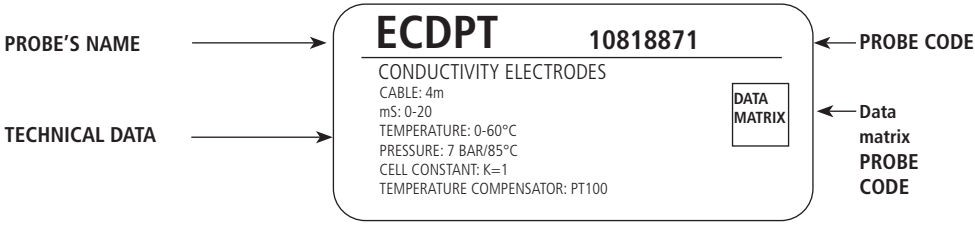

Spare parts

For spare parts orders or any other communication, refer to the pump's label.
Code (CODE) and serial number (P / N) uniquely identify the probe.

Transportation and storage

A not suitable transportation or storage can cause damages.

Use origianal box to pack the probe.

Observe storage conditions also for transportation.

Although packed, always protect the unit against humidity and the action of chemicals.

Before return the probe to the manufacturer Repair service, clean and rinse it.

DO NOT TRASH PACKAGING. USE IT TO RETURN THE PROBE.

Transportation and storage temperature ..... 10 - 50°C (32 - 122°F)
Umidity..... 95% relative humidity (not condensed)

MODELS

ECDHL

Conductivity probes with platinum electrodes.
High linearity

Fig. 1. ECDHL probe

Technical features

Range:
ECDHL/01 ..... 0-200 µS (K=0,1)
ECDHL/1 ..... 0,2-20 mS (K=1)
ECDHL/10 ..... 20-200 mS (K=10)

Temperature..... 0-70° C (32-158°F)
Transportation and storage temperature 10-50°C (32-122°F)
Max pressure ..... 7 bar (101 PSI)
Cable lenght ..... 5 m
Material..... Epoxy body; platinum electrode
Protection IP65

ECDHL ..... not compensated
ECDHLC ..... Temperature NTC 10K compensated
ECDHLCPT ..... Temperature PT100 compensated

Connection cable

COMPENSATION	CABLE		WIRES SIZE
/	RED	ELECTRODES	2 x 0.50
	BLACK		
	GROUND	GROUND	

NTC 10K	RED	ELECTRODES	2 x 0.50
	BLACK		
	GROUND	GROUND	2 x 0.50
	WHITE-GREEN	NTC 10K	

PT 100	RED	ELECTRODES	2 x 0.50
	BLACK		
	GROUND	GROUND	2 x 0.50
	WHITE-GREEN	PT 100	

MODELS

ECDC

Conductivity probes with graphite electrodes.

Fig. 2. ECDC probes

ECDC/1
ECDCC/1
ECDCCPT/1
ECDC/10
ECDCC/10
ECDCCPT/10

ECDCIM/1
ECDCCIM/1
ECDCCIMPT/1
ECDCIM/10
ECDCCIM/10
ECDCCIMPT/10

Technical features

Range:

ECDC/1 ..... 0-20 mS (K=1) - not compensated
ECDCC/1 ..... 0-20 mS (K=1) - Temperature NTC 10K compensated
ECDCCPT/1 ..... 0-20 mS (K=1) - Temperature PT100 compensated
ECDC/10 ..... 0-200 mS (K=10) - not compensated
ECDCC/10 ..... 0-200 mS (K=10) - Temperature NTC 10K compensated
ECDCCPT/10 ..... 0-200 mS (K=10) - Temperature PT100 compensated

Immersion:

ECDCIM/1 ..... 0-20 mS (K=1) - not compensated
ECDCCIM/1 ..... 0-20 mS (K=1) - Temperature NTC 10K compensated
ECDCCIMPT/1 ..... 0-20 mS (K=1) - Temperature PT100 compensated
ECDCIM/10 ..... 0-200 mS (K=10) - not compensated
ECDCCIM/10 ..... 0-200 mS (K=10) - Temperature NTC 10K compensated
ECDCCIMPT/10 ..... 0-200 mS (K=10) - Temperature PT100 compensated

Temperature ..... 0-60° C (32-158°F)
Transportation and storage temperature 10-50°C (32-122°F)
Max pressure ..... 7 bar (101 PSI)
Cable lenght ..... 4 m
Material ..... PVDF body; graphite electrode
Fitting ..... R3/4" (G1/2" immersion version)
Protection IP65

Connection cable

COMPENSATION	CABLE		WIRES SIZE
N/A	RED	ELECTRODES	4 x 0.14
	BLACK		
	GROUND	GROUND	

NTC 10K	RED	ELECTRODES	4 x 0.14
	BLACK		
	WHITE	NTC 10K	
	GREEN		

PT 100	RED	ELECTRODES	2 x 0.50
	BLACK		
	BLUE	GROUND	4 x 0.22
	GREEN	PT 100	
	BROWN		
	YELLOW-WHITE		

MODELS

ECDI

Conductivity probes with stainless steel electrodes.

Fig. 3. ECDI

ECDI
ECDIC
ECDICPT

ECDIIM
ECDICIM
ECDICPTIM

Technical features

Range:
ECDI/1 ..... 0-5 mS (K=1) - not compensated
ECDI/01 ..... 0-200 µS (K=0,1) - not compensated
ECDIC/1 ..... 0-5 mS (K=1) - Temperature NTC 10K compensated
ECDIC/01 ..... 0-200 µS (K=0,1) - Temperature NTC 10K compensate-
dECDICPT/1 ..... 0-5 mS (K=1) - Temperature PT100 compensated
ECDICPT/01 ..... 0-200 µS (K=0,1) - Temperature PT100 compensated

Immersion:
ECDI/1 ..... 0-5 mS (K=1)
ECDI/01 ..... 0-200 µS (K=0,1)
ECDIC/1 ..... 0-5 mS (K=1)
ECDIC/01 ..... 0-200 µS (K=0,1)
ECDICPT/1 ..... 0-5 mS (K=1)
ECDICPT/01 ..... 0-200 µS (K=0,1)

Temperature..... 0-60° C (32-158°F)
Transportation and storage temperature 10-50°C (32-122°F)
Max pressure ..... 7 bar (101 PSI)
Cable lenght ..... 4 m
Material..... PVDF body; stainless steel electrode
Protection IP65

Connection cable

COMPENSATION	CABLE		WIRES SIZE
N/A	Yellow	ELECTRODES	AWG20
	Blue		

NTC 10K	Yellow	ELECTRODES	AWG20
	Blue		
	WHITE	NTC 10K	
	GREEN		

PT 100	Yellow	ELECTRODES	2 x 0.50
	Blue		
			AWG20
	WHITE	PT 100	
	GREEN		

MODELS

EICDC

Stainless steel probes for conductivity.

Fig. 4. EICDC

EICDC
EICDCPT

EICDHPT

Technical features

Range:

EICDC/1 ..... 0-20 mS (K=1) - Temperature NTC 10K compensated
EICDC/01 ..... 0-200 µS (K=0,1) - Temperature NTC 10K compensated
EICDC/001 ..... 0-20 µS (K=0,01) - Temperature NTC 10K compensated
EICDCPT/1 ..... 0-20 mS (K=1) - Temperature PT100 compensated
EICDCPT/01 ..... 0-200 µS (K=0,1) - Temperature PT100 compensated
EICDCPT/001 ..... 0-20 µS (K=0,01) - Temperature PT100 compensated
EICDHPT/1 ..... 0-20 mS (K=1) - Temperature PT100 compensated
EICDHPT/01 ..... 0-200 µS (K=0,1) - Temperature PT100 compensated
EICDHPT/001 ..... 0-20 µS (K=0,01) - Temperature PT100 compensated

Temperature..... 0-130° C (EICDHPT: 0-200°C)
Transportation and storage temperature 10-50°C (32-122°F)
Max pressure ..... 15 bar (218 PSI)
Cable lenght ..... 4 m
Material..... stainless steel body; stainless steel electrode
Protection IP65

Connection cable

COMPENSATION	CABLE		WIRES SIZE
NTC 10K	RED	ELECTRODES	4 x 0.14
	BLACK		
	WHITE	NTC 10K	
	GREEN		
	BLUE	SCHERMO	

PT 100	RED	ELECTRODES	4 x 0.22
	BLACK		
	GREEN	PT 100	
	BROWN		
	YELLOW-WHITE		
	BLUE	SHIELD	

PROPER INSTALLATION

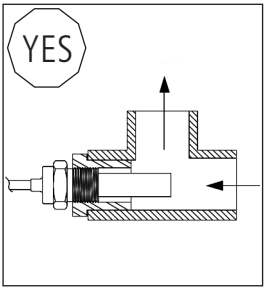

Sensor must be installed in such a way that flow is oriented towards the end of the probe.

This position avoids air bubbles and sediments on the probe that could alter readings.

INCORRECT INSTALLATION

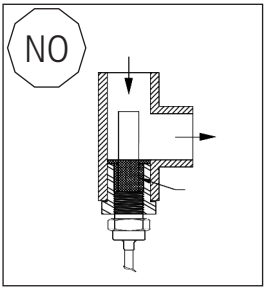

This installation could cause the deposit of impurities and solid parts.

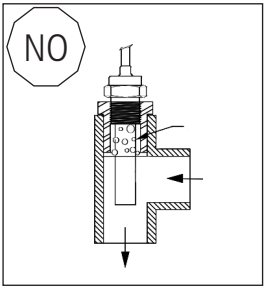

This installation could cause air bubbles around the probe

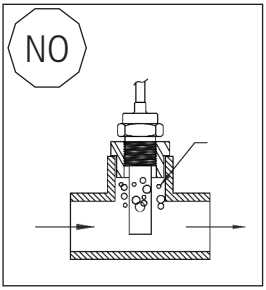

This installation could cause air bubbles around the probe

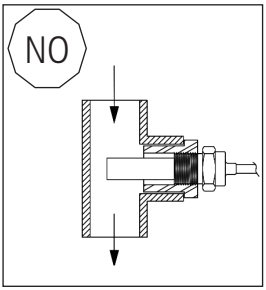

This installation could cause air bubbles around the probe or the deposit of impurities and solid parts.

ASSEMBLING ECDHL

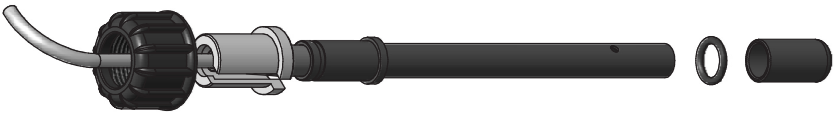

INSTALLATION ECDHL

- Install the probe in the probe holder as shown in the figure.

ECDHL / PEA

ECDHL / NPED

CALIBRATION

Calibrate the probe monthly or more if the application need higher precision.
The sensor need to be calibrated to the instrument it is connected to.
Two points calibration: 0 and a value close to working point.
For better results:
- connect the probe to the instrument;
- calibrate at plant temperature.

0 Calibration
Wash and rinse the probe. Calibrate in air.

2nd point calibration
Use a buffer solution with a value close to working point. Completely dip the probe into the buffer solution.

CAUTION: Make sure that no bubbles are inside the cavity of the probe.

Perform calibration according to the procedure described in the instrument manual.

Maintenance schedule

In order to ensure the requirements of potable drinking water treated and the maintenance of the improvements as declared by the manufacturer, this equipment must be checked at least once a month.

OPERATOR PROTECTION

Use safety equipment according to the company regulations.
Use this safety equipment within the work area during installation, service and when handling chemicals:

- **protective mask**
- **protective gloves**
- **safety goggles**
- **ear plugs or hear muffs**
- **further security device, if necessary.**

POWER SUPPLY DISCONNECTION
Always disconnect power to the motor before you perform any installation or maintenance tasks. Failure to disconnect power will result in serious physical injury.

Installation and maintenance tasks should be carried out by AUTHORIZED AND QUALIFIED PERSONNEL only in accordance with local regulations.

Use original spare parts.

Maintenance inspection

A routine maintenance includes a three-month inspections:
Shorten the inspection intervals appropriately if the chemical is abrasive or corrosive.

Routine maitenance and inspections

Perform these tasks whenever you perform routine maintenance:

- Check probe integrity
- Check electrical wiring.
- Check for corrosion on parts of the probe
- Clean the probe.

Probe cleaning

Regularly clean the probe to ensure a stable and accurate reading.

- Gently wash the probe with a detergent.
- Rinse with running water.
- Allow to immersion in a 5% HCl solution. Rinse with water.

ATTENTION!
DO NOT RUB ELECTRODE: ABRASIONS DAMAGE THE SURFACE AND CAUSE INCORRECT READING.

ATTENTION!
PLATINUM ELECTRODES **ECDHL SERIES.**
DO NOT TOUCH THE PLATINUM SURFACE.
PROBE COULD BE DAMAGED IRREPARABLY.

Dimensions

Fig. 5. Dimensions ECDHL (mm)

ECDHL/xx

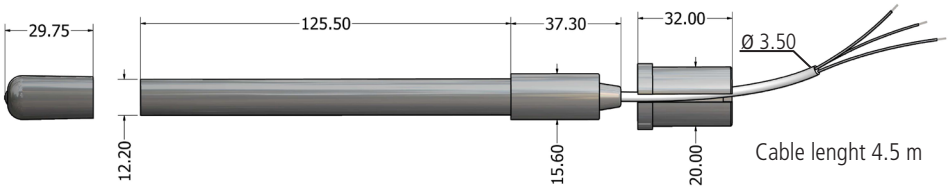

ECDHLC/xx

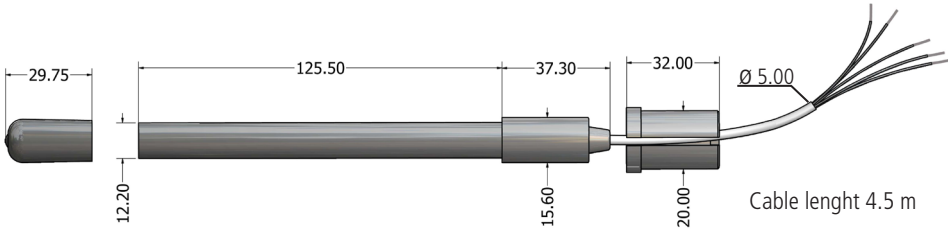

Dimensions

Fig. 6. Dimensions ECDC (mm)

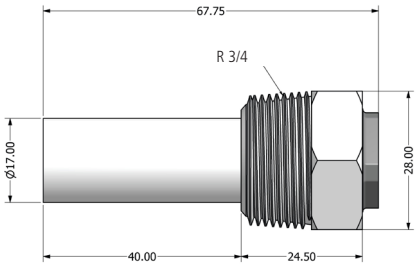

ECDC/K1
ECDCC/K1
ECDCCPT/K1

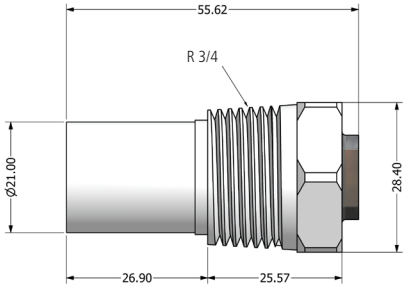

ECDC/K10
ECDCC/K10
ECDCCPT/K10

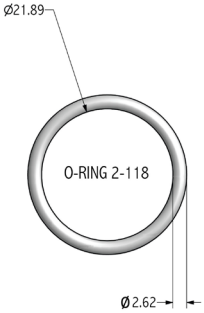

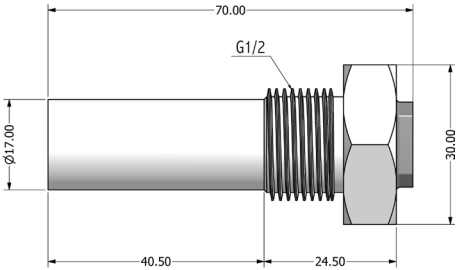

ECDCM/K1
ECDCCM/K1
ECDCCMPT/K1

Connector cable

Lenght 4.0 m

Fig. 7. Dimensions EICDC (mm)

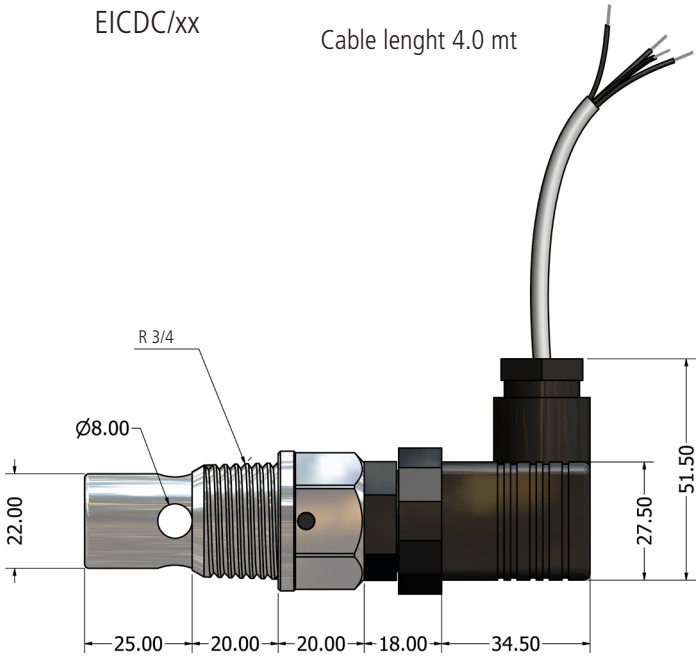

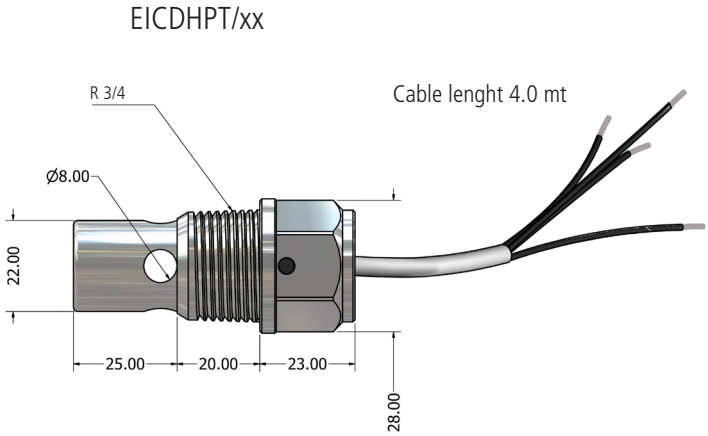

Dimensions

Fig. 8. Dimensions ECDI - ECDIC . ECDICPT (mm)
3/4 K1 PVDF

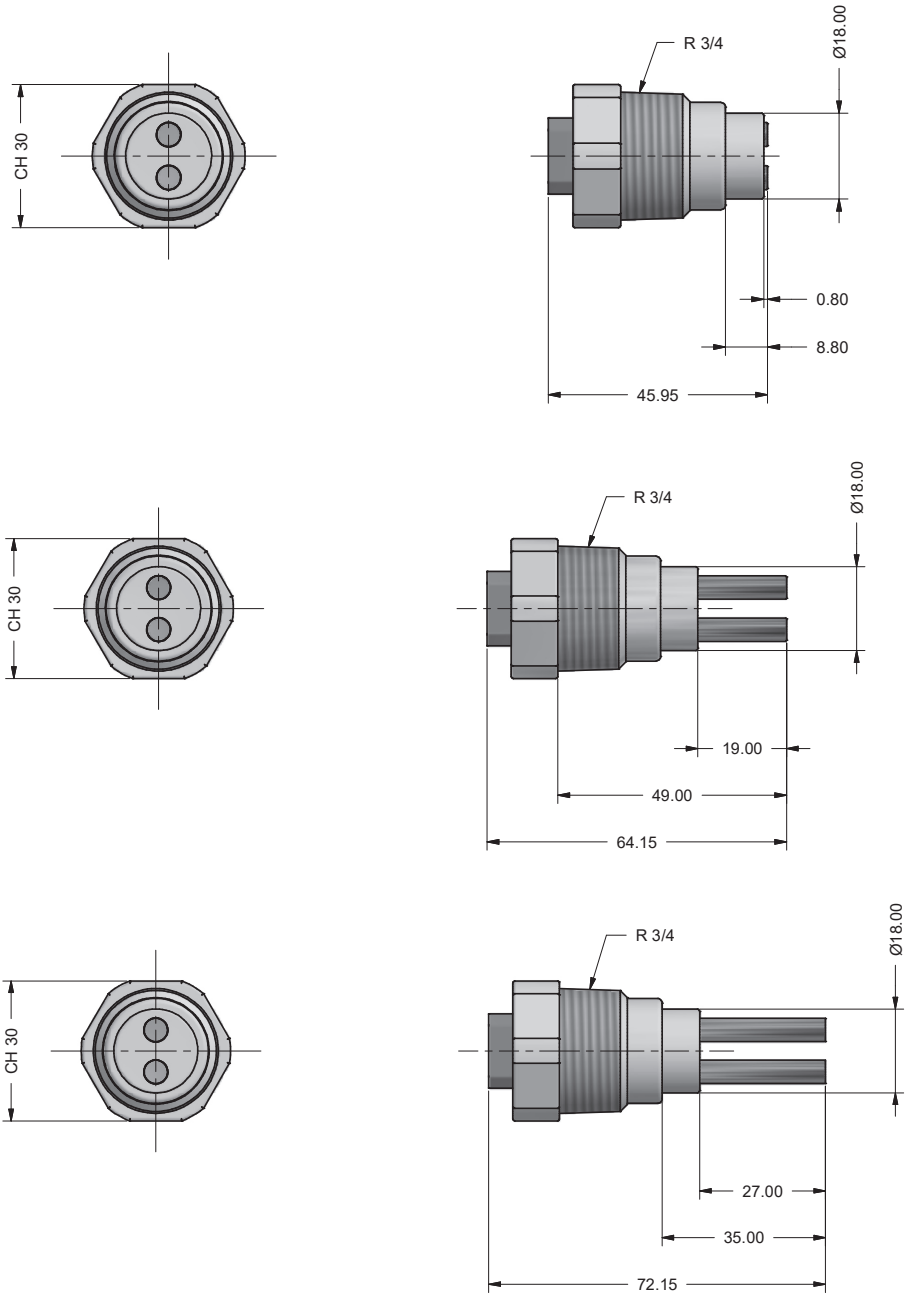

Dimensions

Fig. 9. Dimensions ECDI - ECDIC . ECDICPT (mm)
3/8 K1 PVDF

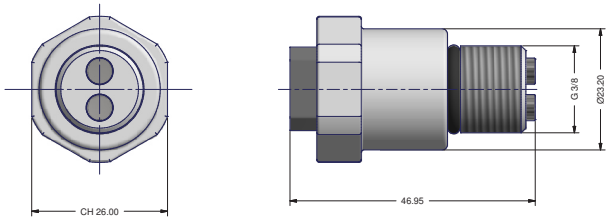

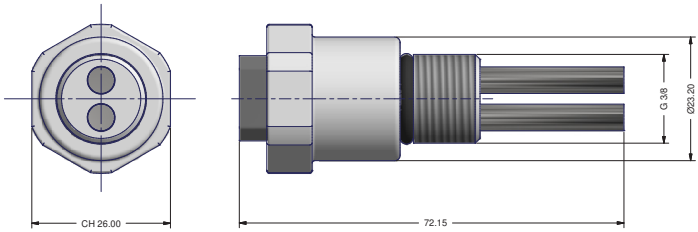

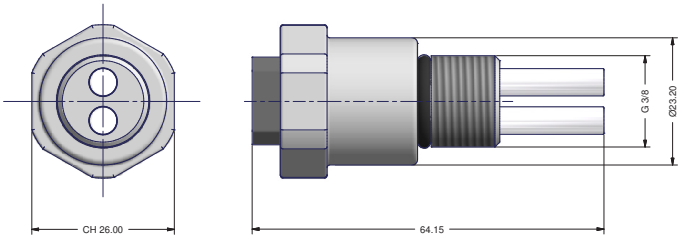

Fig. 10. Dimensions ECDI - ECDIC . ECDICPT (mm)
1/2 K1 PVDF

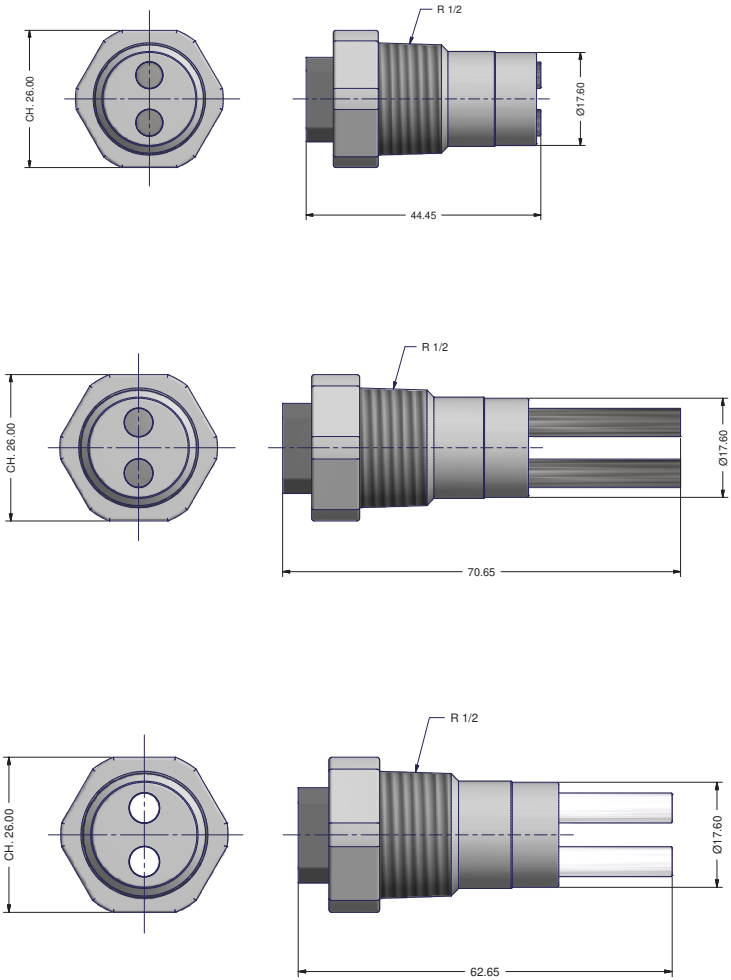

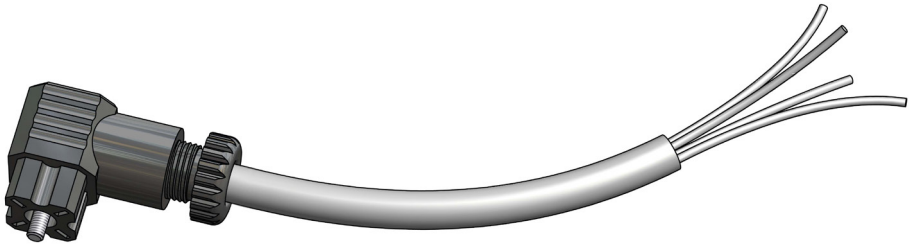

Connector cable

Lenght 4.0 m

PRODUCT SERVICE REPAIR FORM

ENCLOSE THE PRESENT FORM TO THE DELIVERY NOTE

DATE .....

SENDER

Company name.....
Address .....
Phone no. .....
Contact person.....

PRODUCT TYPE (see product label)

DEVICE CODE .....
S/N (serial number).....

OPERATING CONDITIONS

Location/installation description .....
.....
Chemical .....
Start-up (date) ..... Running time (approx. hours).....

REMOVE ALL THE LIQUID AND DRY IT BEFORE PACKAGING IN ITS ORIGINAL BOX.

DESCRIPTION OF PROBLEM

☐ MECHANICAL
- Wear parts.....
- Brekage/other damages .....
- Corrosion.....
- Other.....

☐ ELECTRICAL
- Connections, connector, cables .....
- Other.....

☐ NOT OR INADEQUATE FUNCTION/OTHER
- .....
- .....
- .....

I declare that the product is free of any hazardous chemical.

Signature of the compiler

Company stamp

INDEX

GENERAL SAFETY GUIDELINES 2
PURPOSE OF USE AND SAFETY 3
ENVIRONMENTAL SAFETY.....4
LABEL.....4
SPARE PARTS.....4
MODELS.....6
ECDHL 6
Technical features..... 6
Connection cable 6
MODELS.....7
ECDC 7
Technical features..... 7
Connection cable 8
MODELS.....9
ECDI 9
Technical features..... 9
Connection cable 10
MODELS.....11
EICDC 11
Technical features..... 11
Connection cable 12
PROPER INSTALLATION.....13
INCORRECT INSTALLATION 14
ASSEMBLING ECDHL.....15
INSTALLATION ECDHL 15
CALIBRATION.....16
MAINTENANCE 17
Maintenance schedule..... 17
Maintenance inspection 17
Probe cleaning 17
Dimensions 18
Probe Service Form..... 26

PRECAUTIONS RELATING TO DIRECTIVES, REGULATIONS AND STANDARDS

§ CE/EU and UKCA marking

We guarantee that this product meets the essential requirements of the applicable Directives and Regulations based on the following specifications. Please carefully consider the following specifications for use of the product in European Union member countries and the United Kingdom.

• CE/EU harmonized directives and standards

Directives

DIRECTIVE 2014/30/EU
DIRECTIVE 2011/65/EU
DELEGATED DIRECTIVE (EU) 2015/863

Harmonized standards

EN ISO 12100
EN IEC 61326-1
EN IEC 63000

• UKCA harmonized regulations and standards

Regulations

2008 2016 No. 1091
2012 No. 3032

Harmonized standards

BS EN ISO 12100
BS EN IEC 61326-1
BS EN IEC 63000

Disposal of end-of-life equipment by users

This symbol warns you not to dispose of the product with normal waste. Respect human health and the environment by giving the discarded equipment to a designated collection center for the recycling of electronic and electrical equipment. For more information visit the online site.

When dismantling a pump please separate material types and send them according to local recycling disposal requirements. We appreciate your efforts in supporting your local Recycle Environmental Program. Working together we'll form an active union to assure the world's invaluable resources are conserved.