R990525

ECDIND PT - ECDSIND PT

ECD IND PT

ECDS IND PT

EN

OPERATING MANUAL

INDUCTIVE CONDUCTIVITY PROBES

This operating instructions contains safety information that if ignored can endanger life or result in serious injury.

Read these instructions **carefully** before use and keep them for future reference.

Information and specifications on this manual could be uncorrect or could have printing errors. Specifications are subject to change without notice.

Version: R2-05-21

NORME CE
EC RULES (STANDARD EC)
NORMAS DE LA CE

Direttiva Bassa Tensione
Low Voltage Directive
Directiva de baja tensión
} **2014/35/UE**

Direttiva EMC Compatibilità Elettromagnetica
EMC electromagnetic compatibility directive
EMC directiva de compatibilidad electromagnética
} **2014/30/UE**

GENERAL SAFETY GUIDELINES

Operating, installing, or maintaining the unit in any way that is not covered in this manual could cause death, serious personal injury, or damage to the equipment.

ICON

This manual use the following safety message icon:

Danger!
Indicates a hazardous situation which, if not avoided, will result in death or serious injury.

Warning!
Indicates a hazardous situation which, if not avoided, could result in death or serious injury.

Important - A practice not related to personal injury or additional information.

Cross reference - An instance which refers to related information elsewhere in the same document

PURPOSE OF USE AND SAFETY

EQUIPMENT INTENDED FOR THE MEASUREMENT OF CONDUCTIVITY IN WATER.

Do not use in explosive area (EX).
Do not use with flammable chemicals.
Do not use with radioactive chemicals.

Use the probe in accordance with the data and specifications printed on the label.

Do not modify or use in a manner inconsistent with the provisions of the operating manual.

⚠ **When using this product with aggressive chemicals observe the regulations concerning the transport and storage of aggressive fluids.**

⚠ **When installing always observe national regulations.**

⚠ **Manufacturer is not liable for any unauthorized use or misuse of this product that may cause injury, damage to persons or materials.**

⚠ **Probes must be serviced and repaired by qualified and authorized personnel only.**

⚠ **Before any operation:**
- **always read chemical Material Safety Data Sheet (MSDS);**
- **always wear protective clothing;**
- **empty and rinse the liquid end before work on a the product which has been used with hazardous or unknown chemicals.**

⚠ **Avoid grinding / shock / falls / friction.**

Environmental safety

Work area
Always keep the area clean to avoid and/or discover emissions.

Recycling guidelines
Always recycle according to these guidelines:
1. If the unit or parts are accepted by an authorized recycling company, then follow local recycling laws and regulations.
2. If the unit or parts are not accepted by an authorized recycling company, then return them to the nearest representative.

Waste and emissions regulations
Observe these safety regulations regarding waste and emissions:
- Dispose appropriately of all waste.
- Handle and dispose of the dosed chemical in compliance with applicable environmental regulations.
- Clean up all spills in accordance with safety and environmental procedures.
- Report all environmental emissions to the appropriate authorities.

LABEL

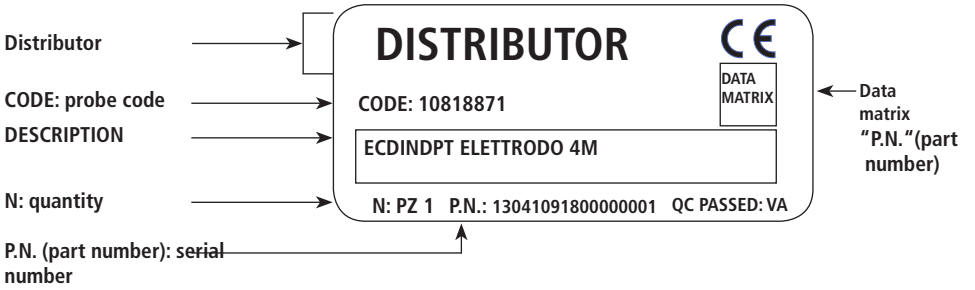

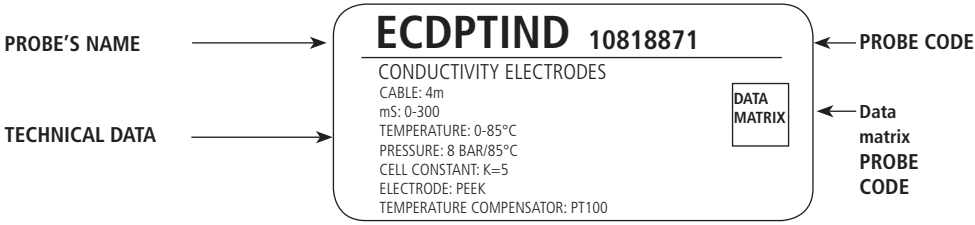

Spare parts

For spare parts orders or any other communication, refer to the pump's label.
Code (CODE) and serial number (P / N) uniquely identify the probe.

Transportation and storage

A not suitable transportation or storage can cause damages.

Use origianal box to pack the probe.

Observe storage conditions also for transportation.

Although packed, always protect the unit against humidity and the action of chemicals.

Before return the probe to the manufacturer Repair service, clean and rinse it.

DO NOT TRASH PACKAGING. USE IT TO RETURN THE PROBE.

Transportation and storage temperature ..... 10 - 50°C (32 - 122°F)
Umidity..... 95% relative humidity (not condensed)

INTRODUCTION

ECDIND PT

Conductivity measure throughout inductive sensor.

The inductive sensor design eliminates polarization errors and electrode coating problems that commonly affect conventional conductivity contacting-electrode models.

Fig. 1. ECDIND PT PROBE

Technical features

Range: ..... 0.1-3 mS;
..... 0.3-30 mS;
..... 0.3-300 mS
Analysys system: ..... inductive
Temperature:..... 0-85° C (32-185°F); 100°C (212°F) in spot measurements
Transportation and storage temp.:..... 10-50°C (32-122°F)
Max pressure: ..... 8 bar (116 PSI)
Cable/connector:..... G1 and NPT ¾"
Cable length: ..... standard 4 m; max 10 m
Material:..... PEEK
Temperature sensor: PT100
Protection IP68
Probe holder: ..... PEL-IND; PEL INDC; PEL IND SS; NPED-IND; PEC IND

Connection cable

Yellow (Power)
Blue (GND)
Brown (Signal)
PT100 White
PT100 Green

ECDSINDPT

Conductivity measure throughout inductive sensor.

The inductive sensor design eliminates polarization errors and electrode coating problems that commonly affect conventional conductivity contacting-electrode models.

ECDSIND PT: PT100 compensation

Fig. 2. ECDSIND PT PROBE

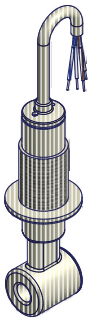

Technical features

Range: ..... 0.3-30 mS
Analysys system: ..... inductive
Temperature:..... 0-85° C (32-185°F); 100°C (212°F) in spot measuremens
Transportation and storage temp.:..... 10-50°C (32-122°F)
Max pressure: ..... 8 bar (116 PSI)
Cable/connector:..... G1 AND NPT ¾"
Cable length: ..... standard 4 m; max 10 m
Material:..... PEEK
Temperature sensor: ..... PT100 (ECDSIND PT);
..... NTC 10K (ECDSIND C);
..... not compensated (ECDSIND)
Protection IP68
Probe holder: ..... NPED-INDS; NPED4-INDS

Connection cable

BLUE-RED-GREEN: .....probe
WHITE-BLACK (not present in mod. ECDSIND): .....temperature compensator

Operating principle

Inductive conductivity sensor induces a low current in a closed loop of solution, then measures the magnitude of this current to determine the solution's conductivity.

The conductivity probe drives Toroid A, inducing an alternating current in the solution. This current signal flows in a closed loop through the sensor bore and surrounding solution.
Toroid B senses the magnitude of the induced current which is proportional to the conductance of the solution.

Fig. 3. Operating principle scheme

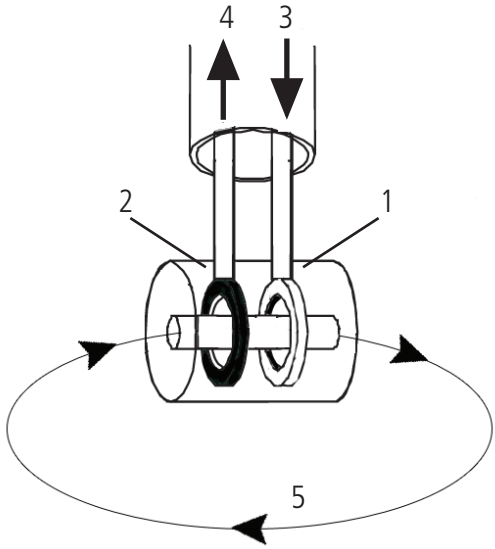

1 - Toroid A
2 - Toroid B
3 - Alternate current generator
4 - Receiver
5 - Induced current in the solution

Installation in a PEL-IND / PEL-INDC

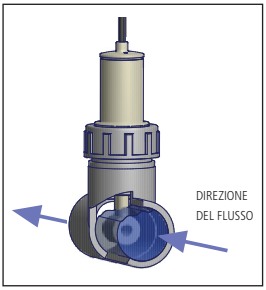

- Install the probe into probe holder in such a way process flow is direcetd through the hole.

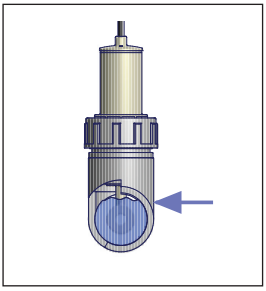

- The inductive conductivity measurement technique requires a process fluid surrounding the sensor. completely.

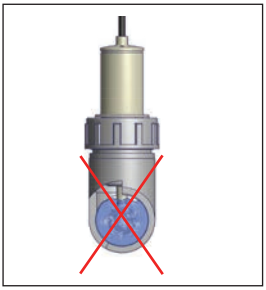

- Avoid air bubbles around the sensor.

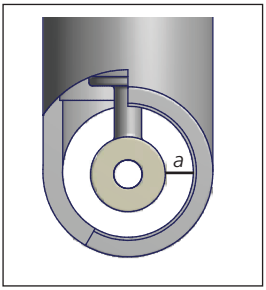

- Clearance
  Verify the distance between interior pipe wall and sensor is at least 10 mm ($a > 10$ mm).
  Smaller distances may affect probe reading.

Installation in a PEL-IND

- Install the probe into probe holder as showed in the picture.

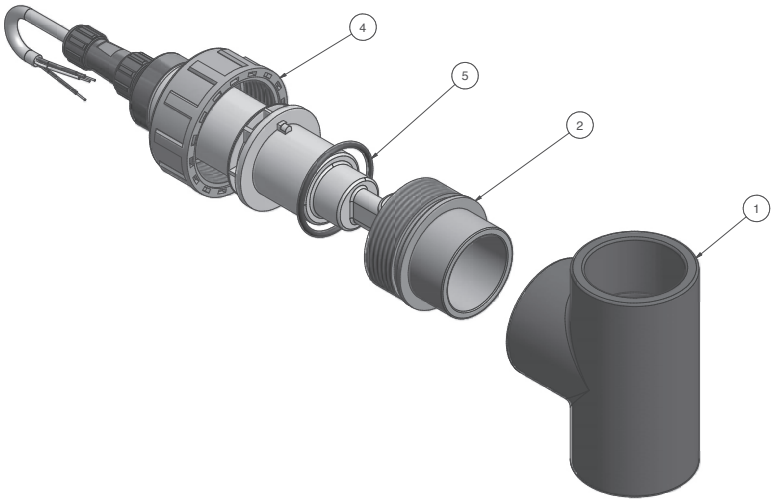

Elenco parti			
ELEM	QTÀ	NUMERO PARTE	DESCRIZIONE
1	1	021.0104.0	TIV040 PVC
2	1	021.1093.0	Supporto sonda PVC
4	1	022.0007.0	Ghiera 1" 1/2
5	1	026.0009.0	OR 2-127

Installation in a NPED-IND

- Install the probe into probe holder as showed in the picture.

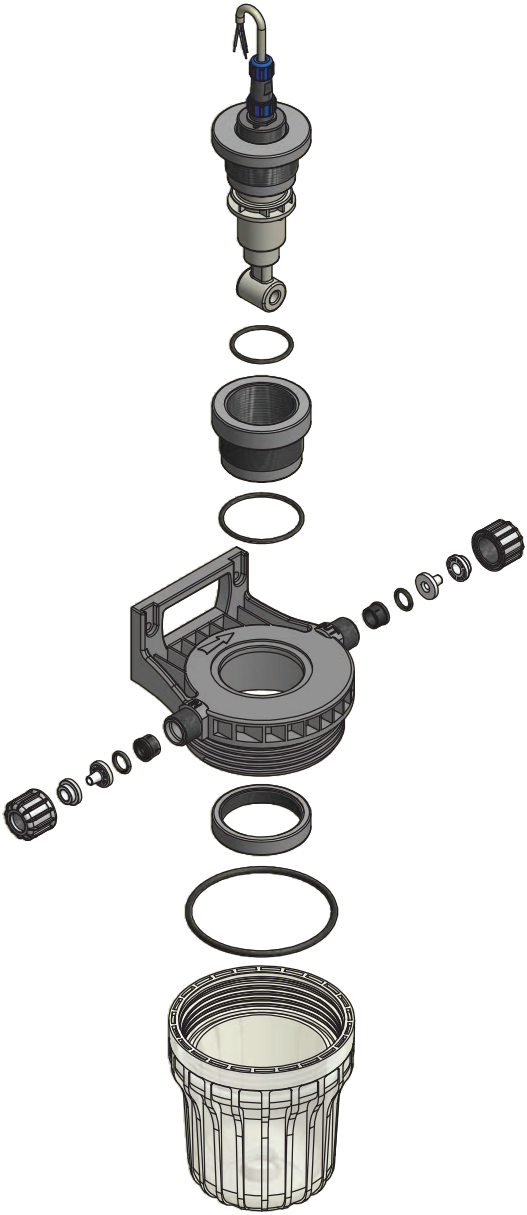

Installation in a PEC-IND

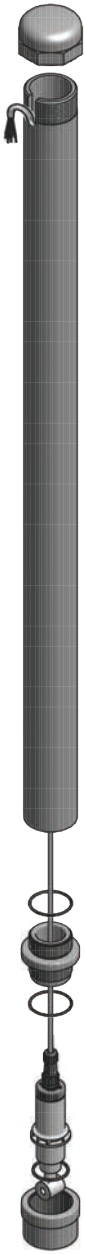

- Install the probe into probe holder as showed in the picture.

Calibration

Calibrate the probe monthly or more if the application need higher precision.
The sensor need to be calibrated to the instrument it is connected to.
Two points calibration: 0 and a value close to working point.
For better results:
- connect the probe to the instrument;
- calibrate at plant temperature.

<u>0 Calibration</u>
Wash and rinse the probe. Calibrate in air.

<u>2nd point calibration</u>
Use a buffer solution with a value close to working point. Completely dip the probe into the buffer solution.

CAUTION: Make sure that no bubbles are inside the cavity of the probe.

Perform calibration according to the procedure described in the instrument manual.

CD	**ECDINDPT / ECDSINDPT**	300-3000: Zero=250mV (± 100); FS=2900 mV (± 300)	0.9mV/µS;89mV/mS;8.8mV/mS a 25° C
	ECDINDPT / ECDSINDPT	300-30000 Zero=250mV (± 100); FS=2900 mV (± 300)	0.9mV/µS;89mV/mS;8.8mV/mS a 25° C
	ECDINDPT / ECDSINDPT	300-300000 Zero=250mV (± 100); FS=2900 mV (± 300)	0.9mV/µS;89mV/mS;8.8mV/mS a 25° C

Maintenance schedule

In order to ensure the requirements of potable drinking water treated and the maintenance of the improvements as declared by the manufacturer, this equipment must be checked at least once a month.

OPERATOR PROTECTION
Use safety equipment according to the company regulations.
Use this safety equipment within the work area during installation, service and when handling chemicals:

- **protective mask**
- **protective gloves**
- **safety goggles**
- **ear plugs or hear muffs**
- **further security device, if necessary.**

POWER SUPPLY DISCONNECTION
Always disconnect power to the motor before you perform any installation or maintenance tasks. Failure to disconnect power will result in serious physical injury.

Installation and maintenance tasks should be carried out by AUTHORIZED AND QUALIFIED PERSONNEL only in accordance with local regulations.

Use original spare parts.

Maintenance inspection

A routine maintenance includes a three-month inspections:

Shorten the inspection intervals appropriately if the chemical is abrasive or corrosive.

Routine maitenance and inspections

Perform these tasks whenever you perform routine maintenance:

- Check probe integrity
- Check electrical wiring.
- Check for corrosion on parts of the probe

Dimensions

Fig. 4. ECDIND PT (mm)

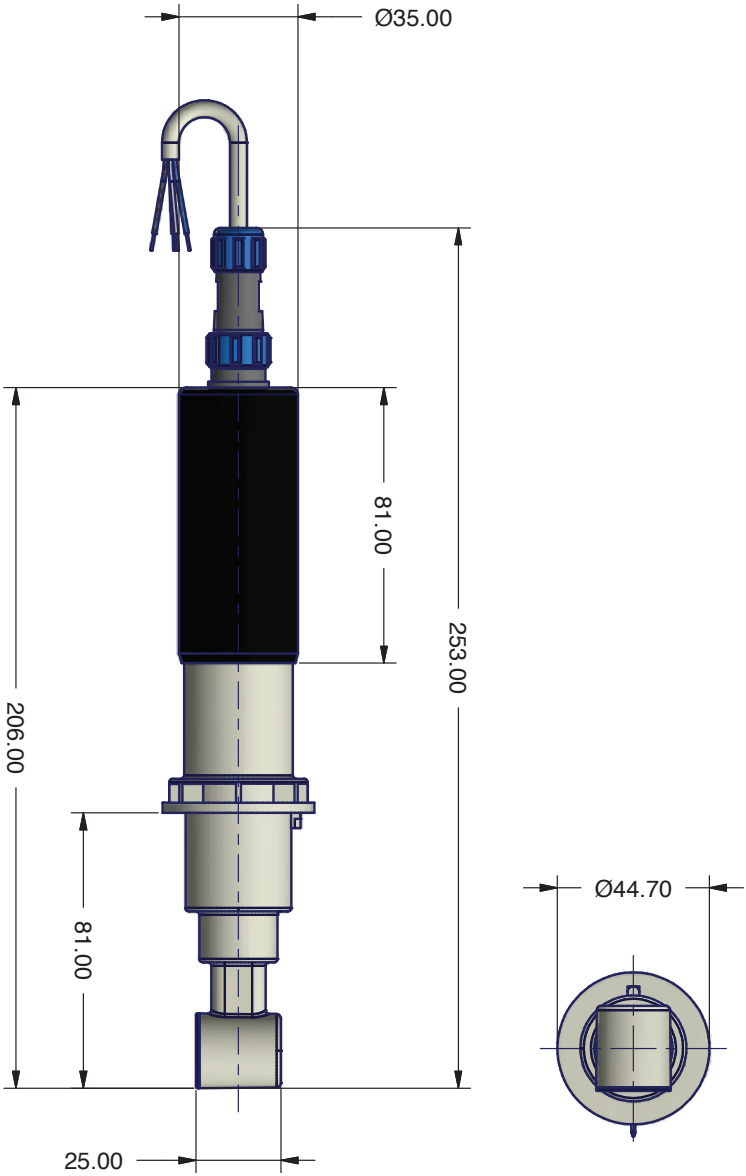

Fig. 5. ECDSIND PT - ECDSINDC - ECDSIND (mm)

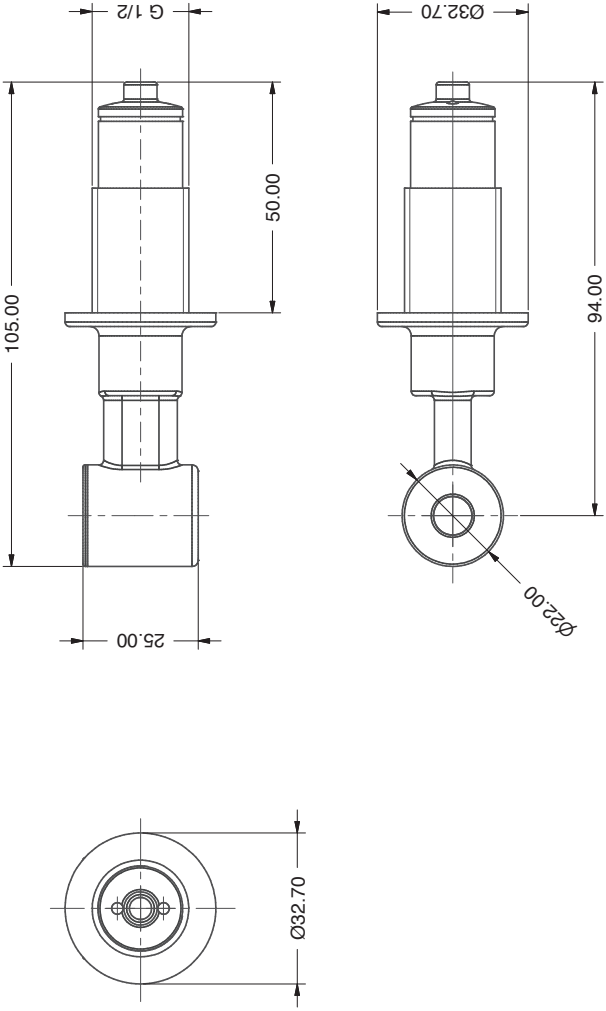

PRODUCT SERVICE REPAIR FORM

ENCLOSE THE PRESENT FORM TO THE DELIVERY NOTE

DATE .....

SENDER

Company name.....

Address .....

Phone no. .....

Contact person.....

PRODUCT TYPE (see product label)

DEVICE CODE .....

S/N (serial number).....

OPERATING CONDITIONS

Location/installation description .....

.....

Chemical .....

Start-up (date) ..... Running time (approx. hours).....

REMOVE ALL THE LIQUID AND DRY IT BEFORE PACKAGING IN ITS ORIGINAL BOX.

DESCRIPTION OF PROBLEM

☐ MECHANICAL

Wear parts.....

Brekage/other damages .....

Corrosion.....

Other.....

☐ ELECTRICAL

Connections, connector, cables .....

Other.....

☐ NOT OR INADEQUATE FUNCTION/OTHER

.....

.....

.....

I declare that the product is free of any hazardous chemical.

Signature of the compiler

Company stamp

SUMMARY

GENERAL SAFETY GUIDELINES 2
PURPOSE OF USE AND SAFETY 3
ENVIRONMENTAL SAFETY.....4
LABEL.....4
SPARE PARTS.....4
INTRODUCTION.....6
ECDIND PT..... 6
Technical features..... 6
Connection cable 6
ECDSIND PT 7
ECDSIND C 7
ECDSIND..... 7
Technical features..... 7
Connection cable 7
ECDSIND PT: PT100 compensation..... 7
ECDSIND C: NTC 10k compensation 7
ECDSIND: not compensated..... 7
Operating principle..... 8
Installation in a PEL-IND / PEL-INDC 9
Installation in a PEL-IND 10
Installation in a NPED-IND 11
Installation in a PEC-IND 12
Calibration 13
MAINTENANCE 14
Maintenance schedule..... 14
Maintenance inspection 14
Dimensions 15
Dimensions 16

PRECAUTIONS RELATING TO DIRECTIVES, REGULATIONS AND STANDARDS

§ CE/EU and UKCA marking

We guarantee that this product meets the essential requirements of the applicable Directives and Regulations based on the following specifications. Please carefully consider the following specifications for use of the product in European Union member countries and the United Kingdom.

• CE/EU harmonized directives and standards

Directives

DIRECTIVE 2014/30/EU
DIRECTIVE 2011/65/EU
DELEGATED DIRECTIVE (EU) 2015/863

Harmonized standards

EN ISO 12100
EN IEC 61326-1
EN IEC 63000

• UKCA harmonized regulations and standards

Regulations

2008 2016 No. 1091
2012 No. 3032

Harmonized standards

BS EN ISO 12100
BS EN IEC 61326-1
BS EN IEC 63000

Disposal of end-of-life equipment by users

This symbol warns you not to dispose of the product with normal waste. Respect human health and the environment by giving the discarded equipment to a designated collection center for the recycling of electronic and electrical equipment. For more information visit the online site.

When dismantling a pump please separate material types and send them according to local recycling disposal requirements. We appreciate your efforts in supporting your local Recycle Environmental Program. Working together we'll form an active union to assure the world's invaluable resources are conserved.